K2BC2E220/45F
MOTORIZED IMPELLER

TECHNICAL DATA

Model	CFM@ 0" S.P.	Cutoff S.P.	Volts	Hz	Amps	Watts	Capacitor µF	RPM	dBA	Min. Temp.	Max. Temp
K2BC2E220/45F	594	2.3	230	60	0.55	125	3.0	2750	65	-40ºF/-40ºC	158ºF/70ºC
K2BC2E220/45F	550	1.8	230	50	0.39	89	3.0	2525	63	-40ºF/-40ºC	158ºF/70ºC

STANDARD FEATURES

Low noise level
594 CFM capacity
Available in 230 VAC, 50/60Hz
Compact size
Precision balanced
External rotor design
Precision ball-bearing motors
Class F, thermally protected
UL 94 V-0 plastic impeller
UL Recognized

ACCESSORIES*

Capacitor - P/N: 0452-81
Inlet Ring - P/N: 1114-07

***Note:** This unit requires a capacitor for operation. Capacitors are sold separately and shipped loose for field installation by customer. An Inlet Ring is recommended for optimum performance. These are sold separately, to be installed by the customer.

PERFORMANCE

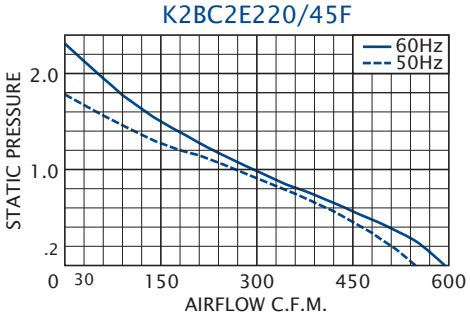

Airflow vs. static pressure curves are shown for 60 Hz and 50 Hz (broken line) inputs. Static pressure is in inches of water.

DRAWINGS

Dimensions, inches [mm], are for reference only and are subject to change.

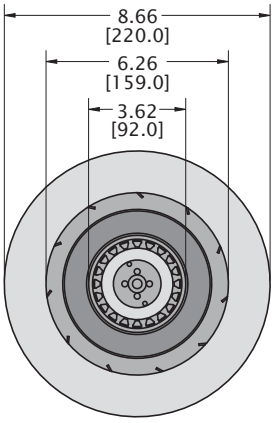

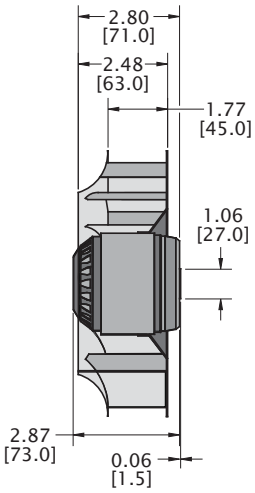

An inlet ring, which must be installed by the customer, is recommended for optimum performance. This unit requires a capacitor which must be mounted and connected by the customer.

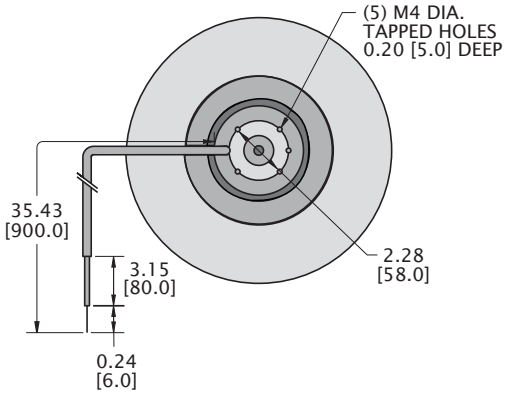

INLET RING P/N: 1114-07

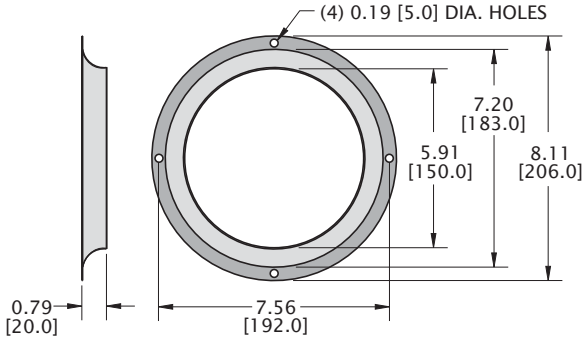

TYPICAL INSTALLATION

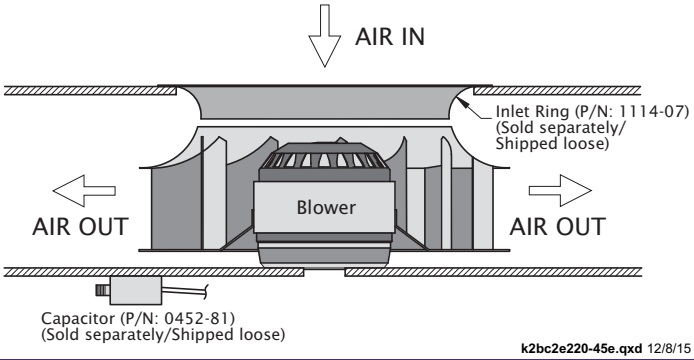

k2bc2e220-45e.qxd 12/8/15

Kooltronic, Inc., 30 Pennington-Hopewell Road, P.O. Box 240, Pennington, NJ 08534-0240
Tel: (609) 466-3400 Fax: (609) 466-1114 kooltronic.com sales@kooltronic.com