K2BCN2E192/40A
MOTORIZED IMPELLER

TECHNICAL DATA

Model	CFM@ 0" S.P.	Cutoff S.P.	Volts	Hz	Amps	Watts	Capacitor µF	RPM	dBA	Min. Temp.	Max. Temp
K2BCN2E192/40A	285	1.7	230	60	0.32	71	2.0	2580	68	-40ºF/-40ºC	158ºF/70ºC
K2BCN2E192/40A	270	1.3	230	50	0.24	55	2.0	2405	65	-40ºF/-40ºC	158ºF/70ºC

STANDARD FEATURES

Low noise level
285 CFM capacity
Available in 230 VAC, 50/60Hz
Compact size
Precision balanced
External rotor design
Precision ball-bearing motors
Class F, thermally protected
UL 94 V-0 plastic impeller
Black painted aluminium reversed inlet cone
UL Recognized
Normally in-stock

ACCESSORIES*

Capacitor - P/N: 0452-64

***Note:** This unit requires a capacitor for operation. Capacitors are sold separately and shipped loose for field installation by customer.

PERFORMANCE

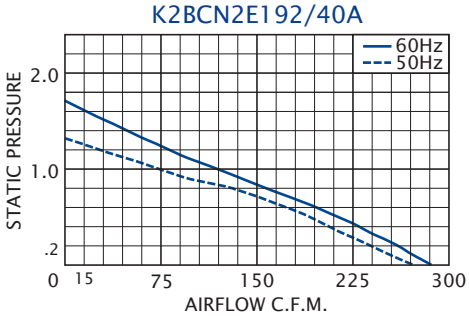

Airflow vs. static pressure curves are shown for 60 Hz and 50 Hz (broken line) inputs. Static pressure is in inches of water.

DRAWINGS

Dimensions, inches [mm], are for reference only and are subject to change.

This unit requires a capacitor which must be mounted and connected by the customer.

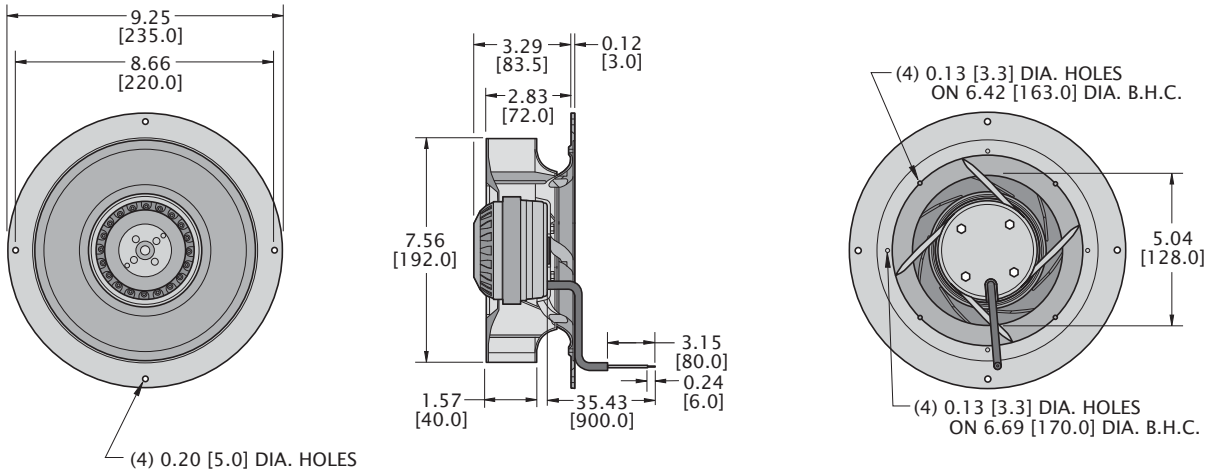

TYPICAL INSTALLATION

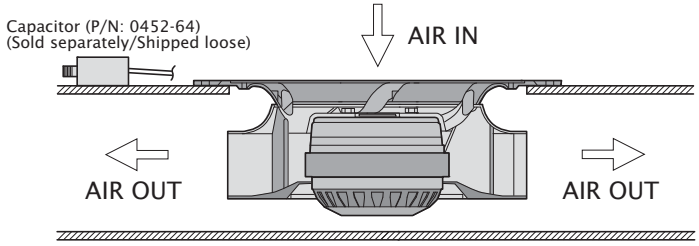

k2bcn2e192-40a.qxd 12/3/15

Kooltronic, Inc., 30 Pennington-Hopewell Road, P.O. Box 240, Pennington, NJ 08534-0240
Tel: (609) 466-3400 Fax: (609) 466-1114 kooltronic.com sales@kooltronic.com