KBCN2E192/40B
MOTORIZED IMPELLER

TECHNICAL DATA

Model	CFM@ 0" S.P.	Cutoff S.P.	Volts	Hz	Amps	Watts	Capacitor µF	RPM	dBA	Min. Temp.	Max. Temp
KBCN2E192/40B	270	1.7	115	60	0.62	71	6.0	2685	68	-40ºF/-40ºC	158ºF/70ºC
KBCN2E192/40B	250	1.3	115	50	0.51	57	6.0	2455	65	-40ºF/-40ºC	158ºF/70ºC

STANDARD FEATURES

Low noise level
270 CFM capacity
Available in 115 VAC, 50/60Hz
Compact size
Precision balanced
External rotor design
Precision ball-bearing motors
Class F, thermally protected
94 V-0 plastic impeller
Black painted aluminium reversed inlet cone
UL Recognized
Normally in-stock

ACCESSORIES*

Capacitor - P/N: 0452-72

***Note:** This unit requires a capacitor for operation. Capacitors are sold separately and shipped loose for field installation by customer.

PERFORMANCE

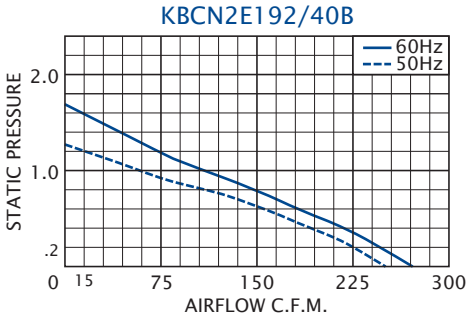

Airflow vs. static pressure curves are shown for 60 Hz and 50 Hz (broken line) inputs. Static pressure is in inches of water.

DRAWINGS

Dimensions, inches [mm], are for reference only and are subject to change.

This unit requires a capacitor which must be mounted and connected by the customer.

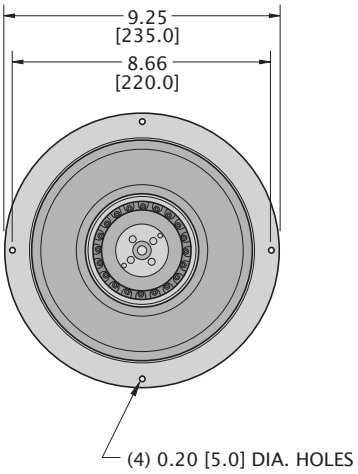

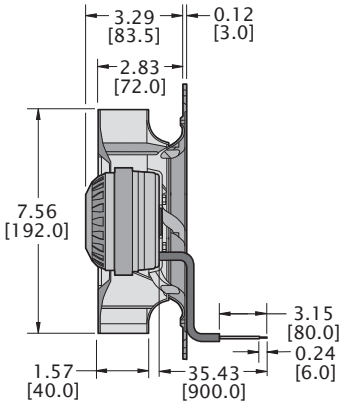

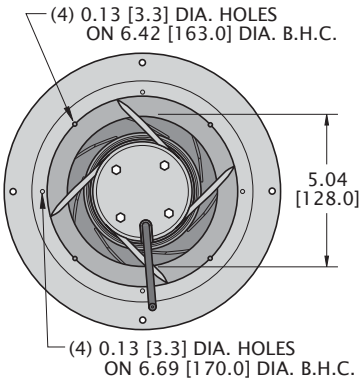

TYPICAL INSTALLATION

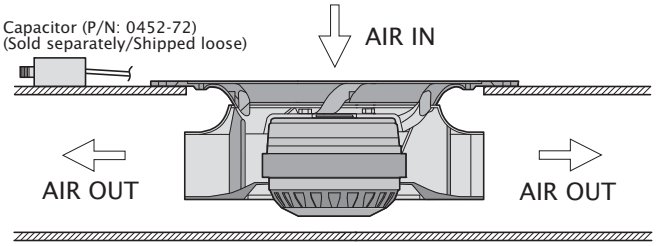

Kooltronic, Inc., 30 Pennington-Hopewell Road, P.O. Box 240, Pennington, NJ 08534-0240
Tel: (609) 466-3400 Fax: (609) 466-1114 kooltronic.com sales@kooltronic.com