KCH20 & KCH30 CONDENSATE EVAPORATOR KITS

DESCRIPTION

High-Capacity Condensate evaporator kits are available for attachment to the bottom of Micro-Mini, Air or Water Cooled Panel Mounted Air Conditioners, and Water-to-Air Heat Exchangers. Condensate is collected, vaporized and discharged to the surrounding air. All units include a safety overflow drain which discharges excessive condensate when required. Overflow may occur when cabinets are poorly sealed, or when cabinet doors are frequently opened, permitting the invasion of moisture-laden air. Built-In Condensate Evaporators are standard equipment on Kooltronic TrimLine Series, Horizontal Top-Mounted, Profile Series models and selected Guardian/GuardianX Series models.

KCH30

KCH30 mounted

FEATURES

No more water on the floor
No more drains required*
Simple installation on your new or existing Kooltronic Air Conditioner
Self-regulating heater conserves power
Requires no thermostat
UL component recognition on your fan and heater
115 and 230 volt models available
Removable cord set allows for easy cleaning of evaporator pan

*All units include a safety overflow drain which discharges excessive condensate when required. Overflow may occur when cabinets are poorly sealed or when cabinet doors are frequently opened, permitting the invasion of moisture-laden air.

ELECTRICAL REQUIREMENTS

KCH20	115 Volt	2.5 amps	50/60 Hz
K2CH20	230 Volt	1.2 amps	50/60 Hz
KCH30	115 Volt	2.6 amps	50/60 Hz
K2CH30	230 Volt	1.3 amps	50/60 Hz

- Voltage need not match Air Conditioner as long as unit is connected to a matching power source.
- 115 Volt units are furnished with NEMA 5-15 P plugs.
- 230 Volt units are furnished with NEMA 6-15 P plugs.

(For wiring directly to Air Conditioners, contact KOOLTRONIC)

UNIT APPLICATIONS

KCH20 & K2CH20 for use on Kooltronic Micro-Mini Air Conditioners.

KCH30 & K2CH30 for use on Kooltronic Panel Mount Air Conditioners and Water-to Air Heat Exchangers.

CAPACITY

Units capable of evaporating up to 8 ounces of water per hour under normal operating conditions.

Find additional information on this model at kooltronic.com, or use the Technical Documents QR code below.

Technical Documents

"like" us on facebook

DRAWINGS

Dimensions, inches [mm], are for reference only and are subject to change.

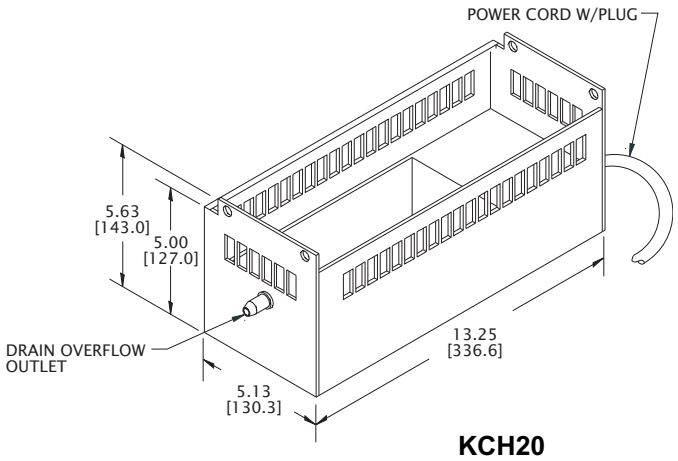

KCH20

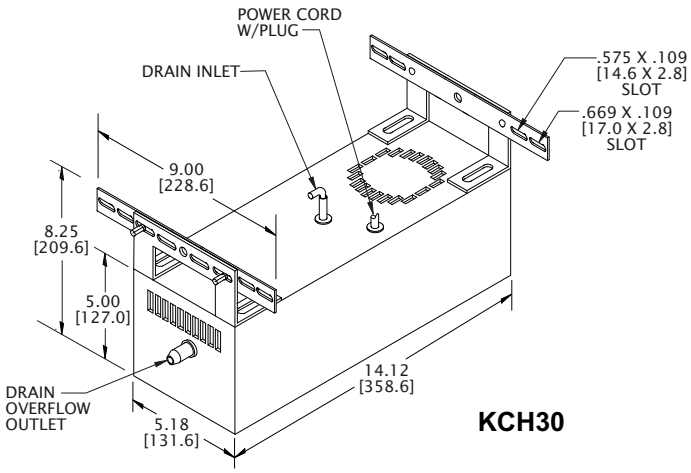

KCH30

kch20-kch30.qxd 6/27/14

Kooltronic, Inc., 30 Pennington-Hopewell Road, P.O. Box 240, Pennington, NJ 08534-0240
Tel: (609) 466-3400 Fax: (609) 466-1114 kooltronic.com sales@kooltronic.com