KDP885 DUCT SUPPLY PACKAGED BLOWERS

KOOLTRONIC
COOLING EXCELLENCE FOR ELECTRONICS

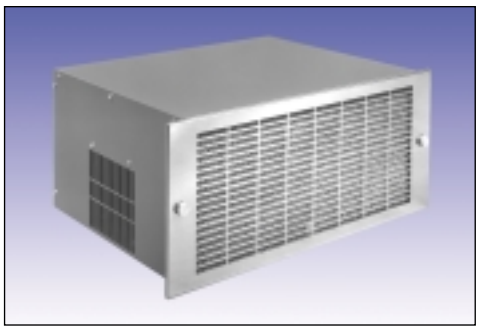

KDP885

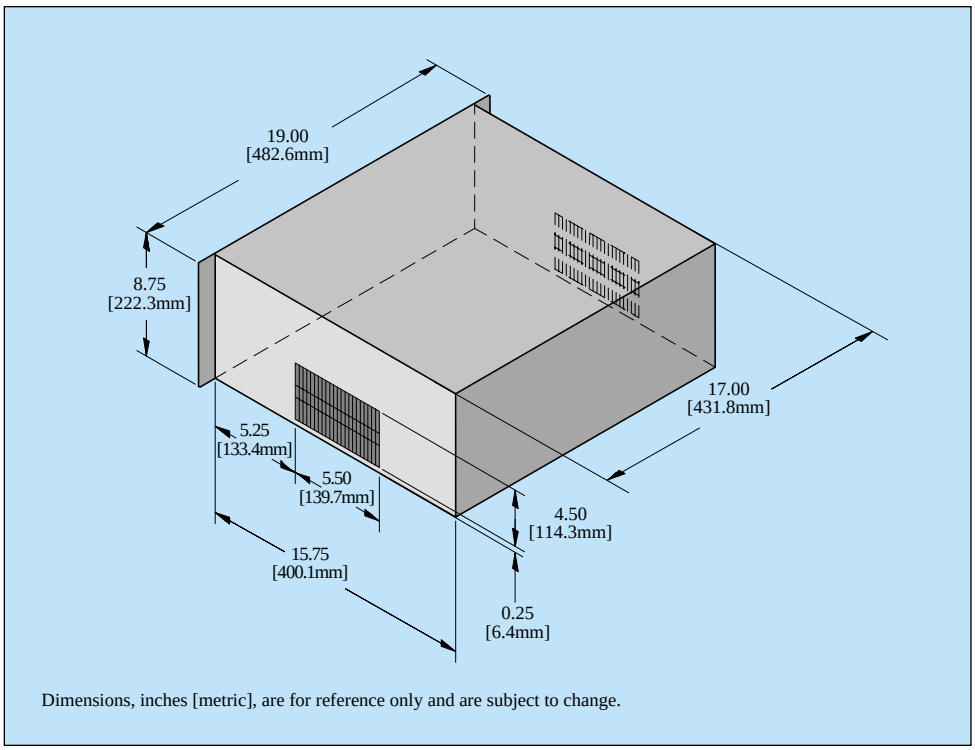

Dimensions, inches [metric], are for reference only and are subject to change.

STANDARD FEATURES

Baked Powder Finish
840 CFM Capacity
Dual discharge ports
Direct air to cabinet ductwork
Heavy-gauge steel enclosures with EIA-notched flanges
Attractive 19" [482.6mm] stainless steel grilles
UL/CSA precision ball-bearing motors
Permanent filters
Exhaust guards included
Three foot [0.9m] (minimum) SJT 3-wire power cord

ACCESSORIES AND OPTIONS*

- Adapters
- Airflow Switch
- EMI/RFI Shielding
- Filter Recoating Adhesive
- Filters for replacement
- Grille Assemblies for replacement
- Other voltages and frequencies
- Special external paint finishes
- Special line cords or connectors

*See opposite side for more information.

APPROXIMATE WEIGHT

48 lbs. [21.8 kg]

TECHNICAL DATA**

Model	CFM@ 0" S.P.	Cutoff S.P.	RPM Nominal	Amps Run.	Amps L.R.	Watts
KDP885	840	2.05	1500	7.8	17.5	820

**115V, 60 Hz. operation

PERFORMANCE CHART

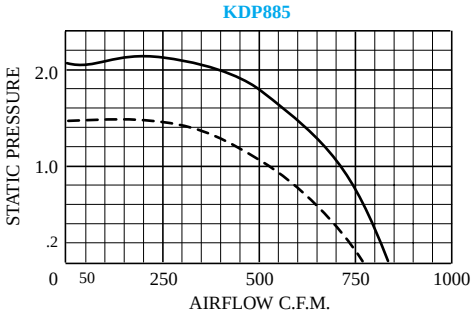

Airflow vs. static pressure curves are shown for 60 Hz and 50 Hz (broken line) inputs. Static pressure is in inches of water.

HOW TO ORDER

Specify model number. For 230 VAC operation, add a 2 after the K. Example: K2DP885.

For assistance in model selection, refer to the Blower and Fan Selection Guides, contact KOOLTRONIC, or use one of our design aid software programs, available FREE.

CALL 1-800-321-KOOL (5665)
or FAX 609-466-1114

POPULAR MODELS ARE STOCKED AND READY TO SHIP

DESCRIPTION

KOOLTRONIC ***Duct Supply Blowers*** generate large volumes of cooling air in limited spaces. They deliver filtered air from either one or two side discharge ports to cool every component in an electronics system by means of a single centrifugal blower wheel. The wheel, driven by a powerful, precision ball-bearing motor, delivers cooling air to side ducts, built into the enclosure, for distribution where needed. While the motor operates at a quiet, life-extending low speed, the pressure characteristic of the large, narrow wheel far exceeds that of conventional blower units often used to supply duct systems.

Filtered air is delivered directly from the wheel into the duct, with no twists or turns. The steep performance curves demonstrate that duct and other frictional losses cannot hamper adequate air delivery when a unit of this design is specified as the cooling source.

Kooltronic, Inc., 30 Pennington-Hopewell Road, P.O. Box 240, Pennington, NJ 08534-0240
Tel: (609) 466-3400 Fax: (609) 466-1114 Internet: www.kooltronic.com E-Mail: techserv@kooltronic.com

STANDARD FEATURES

RUGGED CONSTRUCTION: Precision-engineered heavy-gauge steel construction insures blower will stand up under tough industrial applications. EIA-notched flanges extend 17″[431.8mm] blower cabinet to 19″[482.6mm] panel width.

BAKED POWDER FINISH: Durable, baked-on gray powder finish is standard. Other finishes are available.

PRECISION BALL-BEARING MOTORS: All motors, whether permanent split capacitor or shaded pole, are UL/CSA Recognized, and include automatic-reset thermal overload protection. Designed for low temperature rise, KOOLTRONIC motors are also cooled by the blowers' intake air, for maximum motor life. All motors meet Federal Specification CC-M-1807A, and include double-sealed or double-shielded precision ball bearings which meet Federal Specification FF-B-171A. Special permanent lubricants perform over a broad temperature range: -20ºF (-28.9ºC) to 250ºF (121.1ºC). Consult KOOLTRONIC for motors designed to meet military or extreme environmental specifications.

POWER: 115 VAC or 230 VAC, 50/60 Hz is standard. For multi-phase power, other voltages and frequencies or brushless DC applications, consult KOOLTRONIC.

GRILLE: All units include attractive 19″[482.6mm] wide stainless steel grilles with knurled captive fasteners for easy removal. Grille area is 65% open and complies with OSHA and UL safety standards.

PERMANENT FILTERS: Designed to last the life of the unit, the filters included with all packaged blowers consist of a multi-layer grid of sturdy, corrugated aluminum in a one-piece aluminum frame. Adhesive coated to trap particulate matter, they are easy to remove, wash and treat with KOOLTRONIC A-16, an adhesive-rejuvenating spray. Filters must be kept free of accumulations, to prevent reduction or loss of performance and/or damage to equipment.

POWER CORD: All 115 VAC, 50/60 Hz units are supplied with a minimum of 36″[914.4mm] type SJT three-wire cord with molded plug included, internally grounded and securely locked to the case by a strain relief bushing. 230 VAC, 50/60 Hz blowers are supplied without a plug. Special lengths and/or plugs are available.

EXHAUST GUARDS: Included on all packaged blowers.

ACCESSORIES AND OPTIONS*

ADAPTERS: (Set of two) These extend the width of any 19″[482.6mm] KOOLTRONIC Packaged Blower to permit mounting in a cabinet designed for 24″[609.6mm] units. The EIA-notched adapters are covered by a plate of mirror-finish stainless steel to match KOOLTRONIC Standard Grilles.

These adapters are non-structural. Therefore, Packaged Blowers must be supported at the rear, due to their weight.

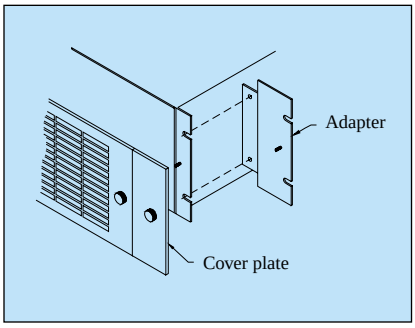

Models

Mirror Finish	Brushed Finish	Height Inches [metric]
KA24-8M	KA24-8	8.75 [222.3]

AIRFLOW SWITCH: See accompanying literature for more information.

EMI/RFI SHIELDING: See EMI/RFI-Shielded Twin Packaged Blowers.

FILTER RECOATING ADHESIVE: This compound is a superior product for recoating all permanent filters after washing. The adhesives penetrate dirt layers to keep the filter surface tacky for longer effective performance between washings.

Part No. A-16 - one pint container.

FILTERS FOR REPLACEMENT: All KOOLTRONIC filters consist of a multi-layer grid of sturdy corrugated aluminum, securely held in a one-piece aluminum frame. Filters are required wherever air is drawn into an electronics enclosure or related cooling equipment to keep internal parts as clean as possible.

A non-drying adhesive coating traps a high percentage of particulate matter. These washable, reusable filters are designed to last the life of the cooling unit. Replacements are available for those which become damaged or otherwise non-serviceable.

Part No. 8751F (16.63″x 8.38″x 0.50″[422.3mm x 212.9mm x 12.7mm])

GRILLE ASSEMBLIES: These assemblies are ideal for venting applications on the enclosure. These attractive grilles are made of mirror-finish stainless steel. All are 19″ [482.6mm] wide. They are 65% open, comply with OSHA and UL safety standards, and include knurled captive fasteners for easy attachment and removal.

Model

Grilles Assemblies	Filter Grilles Assemblies	Height Inches [metric]
KPG875-19	KFG875-19	8.75 [222.3]
Overall depth, including fasteners:		
0.50″[12.7mm]	0.75″[19.1mm]	

OTHER VOLTAGES AND FREQUENCIES

SPECIAL EXTERNAL PAINT FINISHES

SPECIAL LINE CORD OR CONNECTORS

***Contact KOOLTRONIC for information.**

KOOLTRONIC also designs and manufactures a variety of Packaged Blowers to meet *unique* specifications. We invite your inquiries about our modification and custom-design capabilities.

AIRFLOW SWITCH

Protects equipment against damage caused by loss of cooling airflow, by activating an alarm or turning off power. The switch can be mounted on any suitable surface which allows the stainless steel air vane to be placed in the critical airstream. This switch is a single-pole double-throw type, with normally open and normally closed contacts.

The UL rating for the rotary snap action switch is 5 amps at 250 volts AC. A 36″ [914.4mm], three wire SJT power cord is provided, allowing connection to normally open or normally closed circuits.

The choice of air vanes is determined by location and orientation in the airstream, and the normal operating air velocity at the point of installation. Refer to the chart consult KOOLTRONIC Engineering for assistance.

For other switch orientations or where air velocity cannot be measured by conventional means, KOOLTRONIC can supply additional individual or sets of air vanes to determine the optimum size.

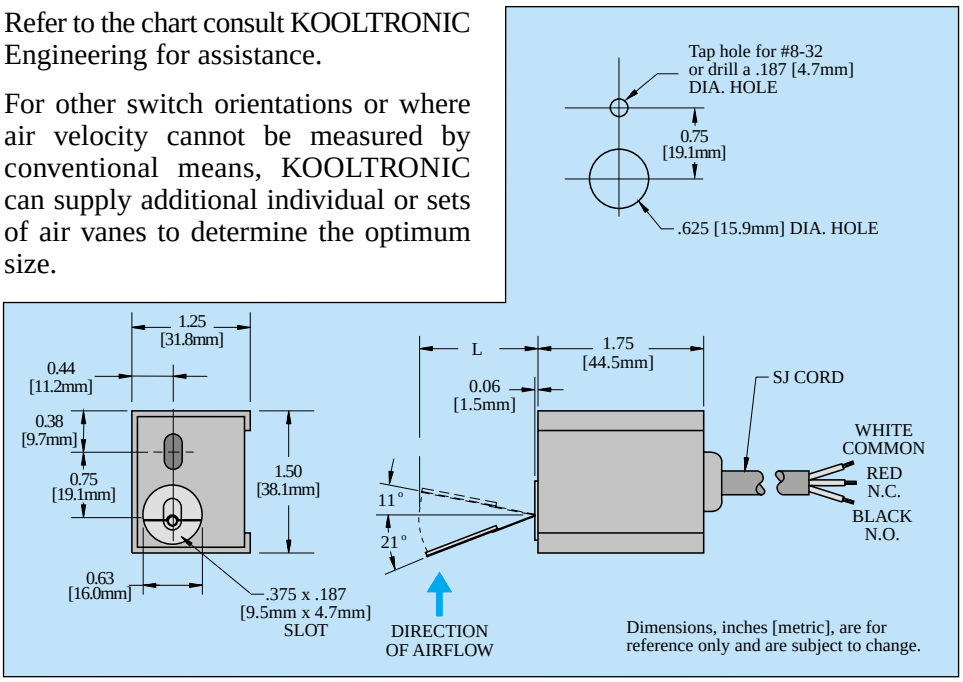

TECHNICAL DATA

Model	Dim. "L" Max. Inches [metric]	Vane Length Inches [metric]	Orientation of Airflow Switch: Vertical Airstream, Airstream Up, Increasing Air, Actuate ft/min	Vertical Airstream, Airstream Up, Decreasing Air, Deactuate ft/min	Vertical Airstream, Airstream Down, Increasing Air, Actuate ft/min	Vertical Airstream, Airstream Down, Decreasing Air, Deactuate ft/min	Horizontal Airstream, Arm Horizontal, Increasing Air, Actuate ft/min	Horizontal Airstream, Arm Horizontal, Decreasing Air, Deactuate ft/min	Horizontal Airstream, Arm Vertical Vane Down, Increasing Air, Actuate ft/min	Horizontal Airstream, Arm Vertical Vane Down, Decreasing Air, Deactuate ft/min
KV-1	3.38 [85.9]	2.88 [73.2]	660	590	-	-	620	530	630	520
KV-2	2.75 [69.9]	2.25 [57.2]	840	750	-	-	790	670	800	660
KV-3	2.44 [62.0]	1.94 [49.3]	980	870	-	-	860	750	860	770
KV-4	2.19 [55.6]	1.69 [42.9]	1010	960	640	610	980	870	980	820
KV-5	1.94 [49.3]	1.44 [36.6]	1180	1130	880	720	1070	930	1050	960
KV-6	1.56 [39.6]	1.06 [26.9]	1520	1370	1210	1050	1370	1260	1410	1290
KV-7	1.44 [36.6]	0.94 [23.9]	1670	1520	1380	1290	1570	1430	1600	1430
KV-8	1.25 [31.8]	0.75 [19.1]	2020	1880	1940	1780	2010	1710	2080	1780
KV-9	1.13 [28.7]	0.63 [16.0]	2360	2180	2350	1930	2340	2060	2510	2150

Kooltronic, Inc., 30 Pennington-Hopewell Road, P.O. Box 240, Pennington, NJ 08534-0240
Tel: (609) 466-3400 Fax: (609) 466-1114 Internet: www.kooltronic.com E-Mail: techserv@kooltronic.com