KPHE28 WATER-TO-AIR PANEL-MOUNTED HEAT EXCHANGERS

NEMA
TYPE 12 & 3R
MAINTAINED

TECHNICAL DATA*

Model	Normally in Stock	Volts	Power Amps	Power Watts	Maximum Inlet Water Temp. ºF	Performance Watts/ºF 1 GPM	Performance Watts/ºF 2 GPM	Approx. Weight (lbs.)
KPHE28	Yes	115	1.2	140	85	42	50	44
K2PHE28		230	0.6	140	85	42	50	44

STANDARD FEATURES

Below-Ambient Cooling Capability
Closed-Loop Cooling
Heavy-Duty Steel Shell with Baked Powder Finish
NEMA 12 & 3R Ratings Maintained (UL50)
UL/CUL Ball-Bearing Motors
UL/CUL Listed

ACCESSORIES AND OPTIONS

Automatic Water Flow Control
Temperature Alarm
High Water Level Detector
Internal Corrosion Protection
Low Airflow Detector
Other voltages and frequencies
Special materials or finishes
Special motors, line cords, or connectors

PERFORMANCE*

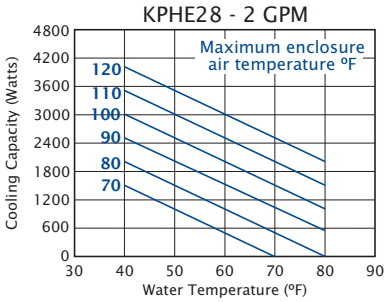

For performance at other flow rates contact the factory or visit www.kooltronic.com.

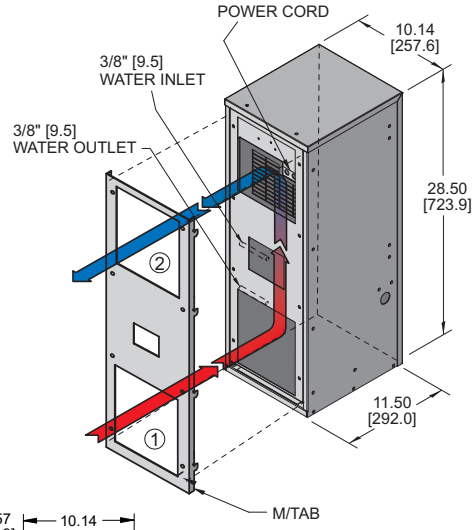

① WARM AIR RETURN FROM ENCLOSURE

② COOL AIR OUTLET TO ENCLOSURE

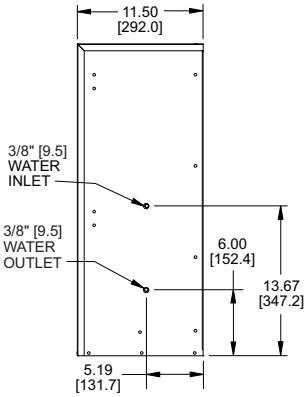

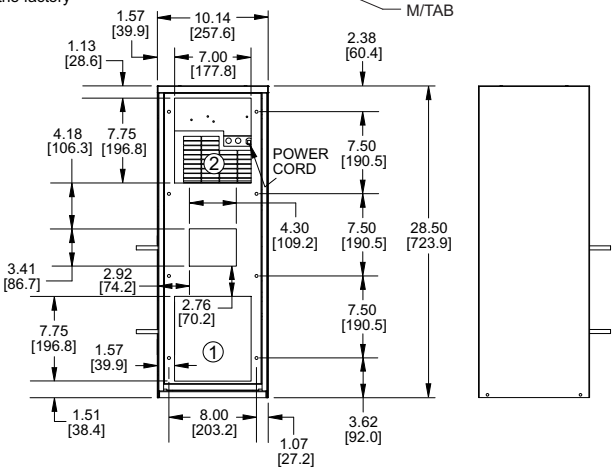

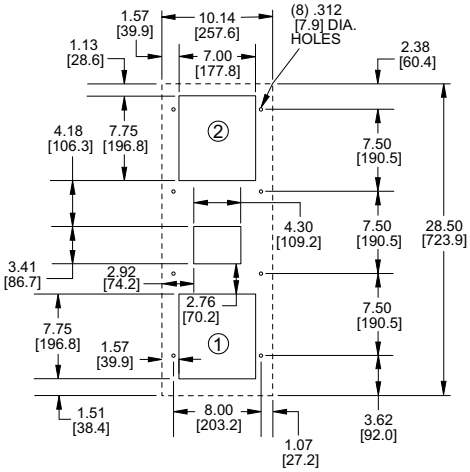

MOUNTING PLAN

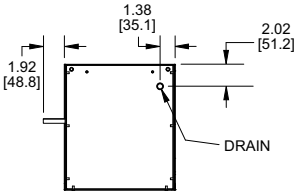

Dimensions, inches [mm], are for reference only and subject to change.

* 60 Hz. operation. For 50 Hz. operation, consult Kooltronic.

kphe28.qxd 8/31/16

Kooltronic, Inc., 30 Pennington-Hopewell Road, P.O. Box 240, Pennington, NJ 08534-0240
Tel: (609) 466-3400 Fax: (609) 466-1114 kooltronic.com sales@kooltronic.com

KPHE28 WATER-TO-AIR PANEL-MOUNTED HEAT EXCHANGERS

DESCRIPTION

KOOLTRONIC ***Water-to-Air Heat Exchangers*** provide uniform cooling in a closed-loop system where a reliable source of clean, cool water is available. The ***KPHE Series*** is designed primarily for use in harsh environments with cooling requirements in excess of the capabilities of ***Air-to-Air Heat Exchangers***. They are particularly useful in highly contaminated environments that would require very frequent cleaning or changing of ambient air filters, or require frequent cleaning of the Heat Exchanger core. KOOLTRONIC ***Water-to-Air Heat Exchangers*** can furnish greater cooling capacities than air-to-air models, depending on water temperature and rate of flow. **Ambient air is sealed out; heat transfer surfaces remain clean.**

The higher cooling ability of the ***KPHE Series*** depends on the temperature of the cooling water. Thus, if the water is cold enough, the temperature of the air delivered to the electronics cabinet can actually be lower than that provided by air conditioners, at less cost.

KPHE Series Heat Exchangers are available in many types and capacities. A complete range of accessories and options is available for all units, adding to their versatility.

KOOLTRONIC also designs and manufactures a variety of Heat Exchangers to meet *unique* specifications. We invite your inquiries about our modification and custom-design capabilities.

STANDARD FEATURES

CLOSED-LOOP COOLING: The enclosure interior airflow system is isolated from the ambient airflow system. No ambient air can invade the cool, dehumidified sensitive component compartment.

PRECISION BALL-BEARING MOTORS: All blower motors are UL/CSA Recognized and include automatic-reset thermal overload protection and double-sealed or double-shielded precision ball bearings. Special permanent lubricants perform over a broad temperature range: -20°F [-28.9°C] to 250°F [121.1°C]. Consult KOOLTRONIC for motors designed to meet military or other extreme environmental specifications.

BLOWERS: All centrifugal blowers are Kooltronic-designed and built, to provide optimum airflow and pressure for each Heat Exchanger design.

RUGGED CONSTRUCTION: Precision-engineered heavy gauge steel construction of all shells and blowers insures Heat Exchangers will stand up under tough applications.

BAKED POWDER FINISH: Durable, baked-on gray powder finish is standard. Other finishes are available.

POWER: Available in 115 VAC, 60 Hz or 50/60 switchable and 230 VAC, 50 Hz or 60 Hz.

POWER CORD: All 115 and 230VAC models are supplied with six-foot three-wire cord with plug. BLDC units have three-wire cords without plugs for direct wiring to power source. Special lengths and/or plugs are available.

GASKETING: All units are fully gasketed for tight, leakproof installation, in compliance with the NEMA 12 Enclosure Rating.

UL/CUL LISTED: All ***KPHE28*** models are ***UL/CUL Listed***.

ACCESSORIES AND OPTIONS**

FACTORY-INSTALLED OPTIONS:

AUTOMATIC WATER FLOW REGULATING VALVE: As supply water temperature and/or heat variances occur, this valve senses the return air temperature and modulates the water flow to provide cooling at the adjustable pre-set level.

Append "W" to Part No.

TEMPERATURE ALARM: A thermostat is mounted inside the cabinet and attached to a sensor in the warm air return. When the air temperature increases to the set point, a signal is sent to a terminal block. User-installed wiring from the terminal block to local and/or remote warning devices *(light, bell, siren, etc.)* can be for normally open or closed operation.

Append "B" to Part No.

HIGH WATER LEVEL DETECTOR PACKAGE: Closes water-supply valve to prevent flooding if excess water accumulates in the drain pan. Signal circuit activates a user-supplied warning device. The low voltage power for the signal circuit is supplied by the user.

Append "C" to Part No.

LOW AIRFLOW DETECTOR: Similar to the Airflow Switch described as a Blower Accessory, this switch is installed in a suitable location in the heat exchanger to detect loss of airflow, and sends a signal to a terminal block, through which user-installed wiring and warning devices are activated.

Append letter "M" to Part No.

OTHER VOLTAGES AND FREQUENCIES**

SPECIAL MATERIALS OR FINISHES**

OTHER VOLTAGES AND FREQUENCIES**

SPECIAL MOTORS, LINE CORDS OR CONNECTORS**

****Contact KOOLTRONIC for information.**

Kooltronic, Inc., 30 Pennington-Hopewell Road, P.O. Box 240, Pennington, NJ 08534-0240
Tel: (609) 466-3400 Fax: (609) 466-1114 kooltronic.com sales@kooltronic.com