TRADITIONAL SERIES P36 AIR-COOLED PANEL-MOUNTED AIR CONDITIONERS

NEMA TYPE 12 MAINTAINED

TECHNICAL DATA

Model	BTU/H Capacity	95/95 Rating BTU/H	Ambient Temp. ºF Max./Min.	Volts	Hz	* Running Amps	Approx. Weight (lbs.)
KA4C4P36L	4000	3900	125/50	115/100	60/50	12.0	110
K2A4C4P36L	4000	3900	125/50	230/200	60/50	5.9/5.8	110
KA4C6P36R	6000	5200	125/50	115/100	60/50	17.6/19.8	110
K2A4C6P36L	6000	5200	125/50	230/200	60/50	9.6/9.9	110

* Rating shown is for operation at maximum ambient temperature.

STANDARD FEATURES

CFC-Free Refrigerant
Filter
NEMA 12 Rating Maintained (UL50)
Reversible Condenser Outlet Blower (except 8P36)
Thermostatic Low Temperature Control
UL/CUL Listed/Recognized**

"like" us on facebook

Find additional information on this model at kooltronic.com, or use the Technical Documents QR code below.

Technical Documents

ACCESSORIES AND OPTIONS

Compressor Short Cycle Protector
Condensate Evaporator Kit
Enclosure Heater
Filter Recoating Adhesive
Internal Corrosion Protection
Lead-Lag Controller
Lifting Eyes
Low Airflow Detector
Low Ambient Kit
Mounting Hinge
Remote Thermostat Relay
Replacement Filters
Special controls or indicators
Special motors, line cords, or connectors
Special paint finishes
Stainless or Aluminum Shell
Temperature Alarm
Weather Protection Kit

PERFORMANCE

KA4C4P36L

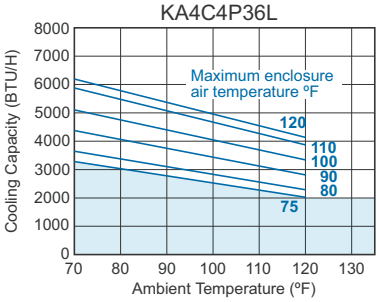

KA4C6P36R

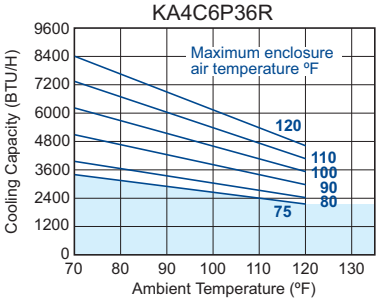

KA3C8P36R▾

Operation within shaded area not recommended.
▾Contact factory for performance data.

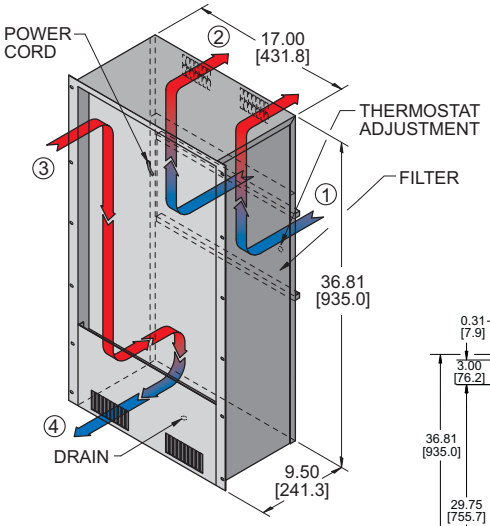

① FILTERED CONDENSER AIR INLET (Ambient Air In)
② CONDENSER OUTLET (Warm Ambient Air Out)
③ WARM AIR RETURN FROM ENCLOSURE
④ COOL AIR OUTLET TO ENCLOSURE

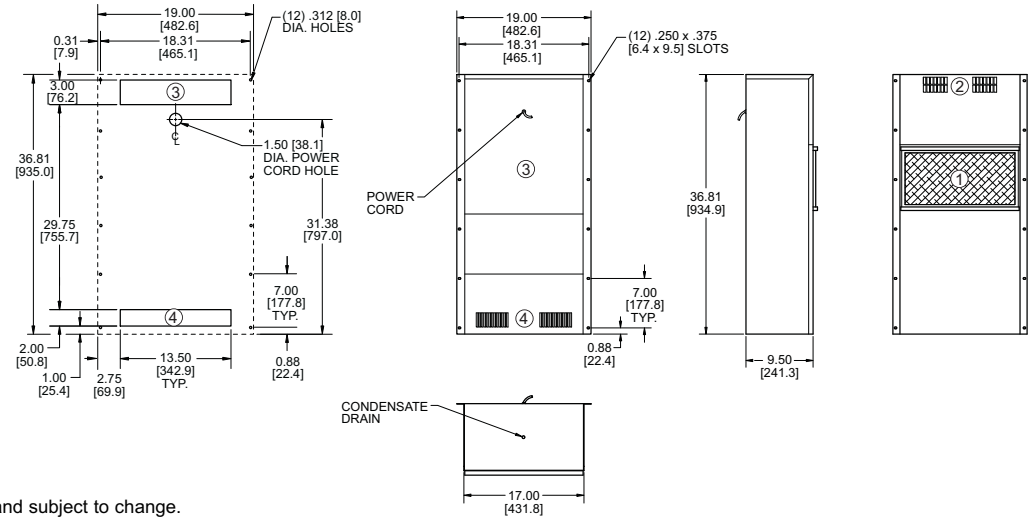

Many popular units are available as 3D solid models for customer system integration. Please contact Kooltronic for details.

Dimensions, inches [mm], are for reference only and subject to change.

** UL/CUL Recognized models available as Listed at added cost.

p36.qxd 5/7/12

Kooltronic, Inc., 30 Pennington-Hopewell Road, P.O. Box 240, Pennington, NJ 08534-0240
Tel: (609) 466-3400 Fax: (609) 466-1114 kooltronic.com sales@kooltronic.com

TRADITIONAL SERIES P36 AIR-COOLED PANEL-MOUNTED AIR CONDITIONERS

DESCRIPTION

This series of KOOLTRONIC Air Conditioners offers the same range of sizes, voltages and frequencies, as the ***TrimLine Series,*** with cooling capacities of 4,000 to 8,000 BTU/H, in 19" width including side flanges.

These **traditional width** models have been redesigned to our latest standards and are available in a 36" height for maximum flexibility in obtaining optimal cooling efficiency. Good design dictates that the warm air return should be as far as possible from the cool air outlet. In addition, the Air Conditioner height should provide for the cooling air to be forced through all the heat-producing components in the enclosure. KOOLTRONIC designs satisfy both of these needs.

These high performance Air Conditioners can be installed in a variety of locations, either fixed or hinged, directly to any vertical cabinet panel or door. Gasketed mountings and the closed-loop design seal out moisture and contaminant-laden ambient air. Powerful **Kooltronic-designed** centrifugal blowers circulate clean, cool air throughout the enclosure.

Outdoor or corrosive environments require weather protection and/or special internal and external protective features. Also see ***Integrity NEMA 4/4X*** and ***Intrepid Outdoor Series.***

For extreme ambient temperatures and/or severely contaminated environments, the use of ***Water-Cooled Air Conditioners*** is recommended.

KOOLTRONIC also designs and manufactures a variety of Air Conditioners to meet unique specifications. We invite your inquiries about our modification and custom-design capabilities.

STANDARD FEATURES

CLOSED-LOOP COOLING: The enclosure interior airflow system is isolated from the ambient airflow system. Ambient air can not invade the cool, dehumidified sensitive component compartment.

BALL-BEARING MOTORS: All blower motors are UL/CSA Recognized and include automatic-reset thermal overload protection and double-sealed or double-shielded precision ball bearings. Special permanent lubricants perform over a broad temperature range: -20°F [-28.9°C] to 250°F [121.1°C].

BLOWERS: All centrifugal blowers are Kooltronic-designed and built, to provide optimum airflow and pressure for each Air Conditioner design.

RUGGED CONSTRUCTION: Precision-engineered heavy gauge steel construction of all shells and blowers insures Air Conditioners will stand up under tough applications.

BAKED POWDER FINISH: Durable, baked-on gray powder finish is standard. Other finishes are available.

POWER: Available in 115 VAC, 60 Hz or 50/60 switchable and 230 VAC, 50 Hz or 60 Hz.

REFRIGERANTS: CFC-free R134a Refrigerant is used in all ***Traditional P36 Series*** Air Conditioners.

FILTERS: Multi-layer grid of sturdy, corrugated aluminum in an aluminum frame. May be reused after washing off accumulations and spraying with A-16 Recoating Adhesive.

CONDENSATE REMOVAL: Condensate drain fitting and hose are included.

LOW TEMPERATURE CONTROL: Thermostatic Low Temperature Control prevents over-cooling and provides energy-efficient operation.

FIELD-REVERSIBLE CONDENSER OUTLET BLOWER: Provides choice of horizontal or vertical air discharge.

POWER CORD: All models have six foot [1.8m] 3-wire power cords. Those rated at 16.0 Amps or less are supplied with appropriate plugs. Those rated at more than 16.0 Amps are supplied without plugs, for direct wiring to power source. For these, junction box connections, enabling UL Listed status where applicable, can be supplied at added cost.

INSULATION: All cold components, lines and the evaporator compartment are insulated with high-performance insulation for maximum efficiency.

GASKETING: All units are fully gasketed for tight, leakproof installation, in compliance with the NEMA 12 Enclosure Rating.

QUALITY ASSURANCE: Refrigeration system components are kept sealed until charged with refrigerant; all brazed joints are thoroughly leak-tested; each unit is functionally tested before shipment.

UL/CUL LISTED: All ***Traditional P36 Series*** models are ***UL/CUL Listed*** or ***Recognized***. ***Listed*** Air Conditioners have an “L” at or near the end of the model number and ***Recognized*** units have an “R” at or near the end of the model number. All ***Recognized*** models are available as ***Listed*** at added cost.

ACCESSORIES AND OPTIONS**

FACTORY-INSTALLED OPTIONS:

ALUMINUM SHELL: Where light weight and/or compatibility with appearance of Aluminum Enclosures are required. Unpainted Type 5052 is standard. Other types and ultra-violet-resistant baked powder finish are available.

Append letter "A" to Part No. (5052 Unpainted)

COMPRESSOR SHORT CYCLE PROTECTOR: Protects the compressor from possible damage due to harmful short cycling.

Append letter "Y" to Part No.

ENCLOSURE HEATER: 120V or 240V fin strip heater, installed singly or ganged, used to maintain desired internal enclosure temperature, under cold operating conditions.

Single Heater, append letter "F" to Part No.
Double Heater, append letter "G" to Part No.

****Contact KOOLTRONIC for information.**

Kooltronic, Inc., 30 Pennington-Hopewell Road, P.O. Box 240, Pennington, NJ 08534-0240
Tel: (609) 466-3400 Fax: (609) 466-1114 kooltronic.com sales@kooltronic.com

ACCESSORIES AND OPTIONS** (continued)

INTERNAL CORROSION PROTECTION: For corrosive or other hostile environments, special coating material is applied to copper lines, coils and other parts subject to damage. Also see **Stainless Steel Shell** or ***Integrity NEMA 4/4X Air Conditioners***.

Append letter "H" to Part No.

LIFTING EYES: Heavy-gauge steel lifting eyes, attached to the side panels, assist in positioning units.

Append letter "K" to Part No.

LOW AIRFLOW DETECTOR: Similar to the Airflow Switch shown in the Blower Accessories Section, the switch is installed in a suitable location in the Air Conditioner to detect loss of airflow, and sends a signal to a terminal block, through which user-installed wiring and warning devices are activated.

Append letter "M" to Part No.

LOW AMBIENT KIT: Maintains sufficient operating pressures when ambient temperatures drop below 50°F [10°C]. Includes a compressor heater and pressure actuated condenser blower cycling control.

Append letter “N” to Part No.

MOUNTING HINGE: (Left-hand or Right-hand) Allows the Air Conditioner itself to be used as a cabinet door. (Caution: The cabinet must be able to support the full weight of the unit in open position.) Specify left-hand or right-hand, determined by facing the mounting side of the Air Conditioner.

Append letter “P” to Part No. for left-hand.
Append letter “S” to part No. for right hand.

SPECIAL MATERIALS OR FINISHES**

SPECIAL MOTORS, LINE CORDS OR CONNECTORS**

STAINLESS STEEL SHELL: For applications in corrosive or other hostile environments such as those requiring Internal Corrosion Resistant Coatings, especially where chemical/moisture combinations are present.

Append letter "V" to Part No. (304-2B Unpainted)

TEMPERATURE ALARM: A thermostat is mounted inside the cabinet and attached to a sensor in the warm air return. When the air temperature increases to the set point, a signal is sent to a terminal block. User-installed wiring from the terminal block to local and/or remote warning devices *(light, bell, siren, etc.)* can be for normally open or closed operation.

Append letter "B" to Part No.

CUSTOMER-INSTALLED OPTIONS:

CONDENSATE EVAPORATOR KIT: Heated add-on unit for Air Conditioners without built-in condensate evaporator system. Eliminates need for draining of condensate under normal operating conditions. May not be adequate in extremely high humidity with open or leaky enclosure.

Consult KOOLTRONIC for Part No.

FILTER RECOATING ADHESIVE: This compound is a superior product for recoating filters after washing. The adhesives penetrate dirt layers to keep the filter surface tacky for longer effective performance between washings. Part No. A-16.

REPLACEMENT FILTERS: All KOOLTRONIC filters consist of a multi-layer grid of sturdy corrugated aluminum, securely held in a one-piece aluminum frame. Filters are required wherever air is drawn into an electronics enclosure or related cooling equipment to keep internal parts as clean as possible.

A non-drying adhesive coating traps a high percentage of particulate matter. These filters are reuseable, they may be washed and recoated with the appropriate filter recoating adhesive. Replacements are available for those which become damaged or otherwise non-serviceable.

4,000-6,000 BTU/H: Part No. 8751F (16.63″ x 8.38″ x 0.50″ [422mm x 213mm x 13mm])
8,000 BTU/H: Part No. 12251F (16.63″ x 11.88″ x 0.50″ [422mm x 302mm x 13mm])

WEATHER PROTECTION KIT: For outdoor installations subject to invasion by rain, snow or windblown dirt, special deflectors shield the condenser air inlet and outlet ports. Air conditioners installed outdoors may also require special exterior paint.

****Contact KOOLTRONIC for information.**

HOW TO ORDER

Specify model number. NOTE: Accessories and Options may affect model number, contact KOOLTRONIC for information.

For assistance in model selection, refer to the Air Conditioner Sizing and Selection Guide, contact KOOLTRONIC, or use one of our design aid software programs, available FREE.

CALL 1-800-321-KOOL (5665)
or FAX 609-466-1114

POPULAR MODELS ARE STOCKED AND READY TO SHIP

Kooltronic, Inc., 30 Pennington-Hopewell Road, P.O. Box 240, Pennington, NJ 08534-0240
Tel: (609) 466-3400 Fax: (609) 466-1114 kooltronic.com sales@kooltronic.com