THIS DOCUMENT IS THE PROPERTY OF KOOLTRONIC, INC. AND CONTAINS PROPRIETARY AND CONFIDENTIAL INFORMATION WHICH MUST NOT BE DUPLICATED, USED OR DISCLOSED TO OTHERS, EXCEPT AS EXPRESSLY AUTHORIZED IN WRITING BY KOOLTRONIC, INC.

REVISIONS

SYM	NOTICE	DESCRIPTION	DATE	APPROVED
–	EC 18/469	NEW DRAWING RELEASE	5/1/19	SDS/JS

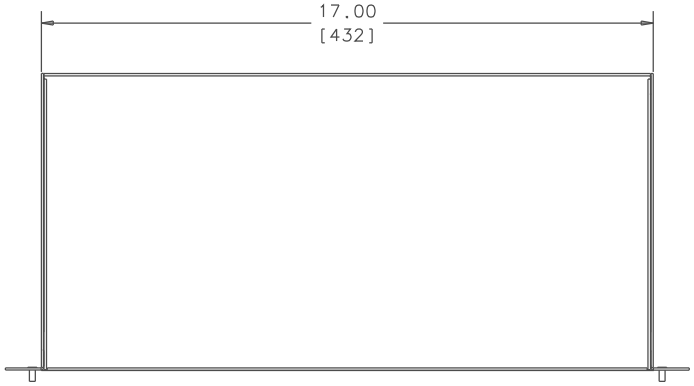

TOP VIEW

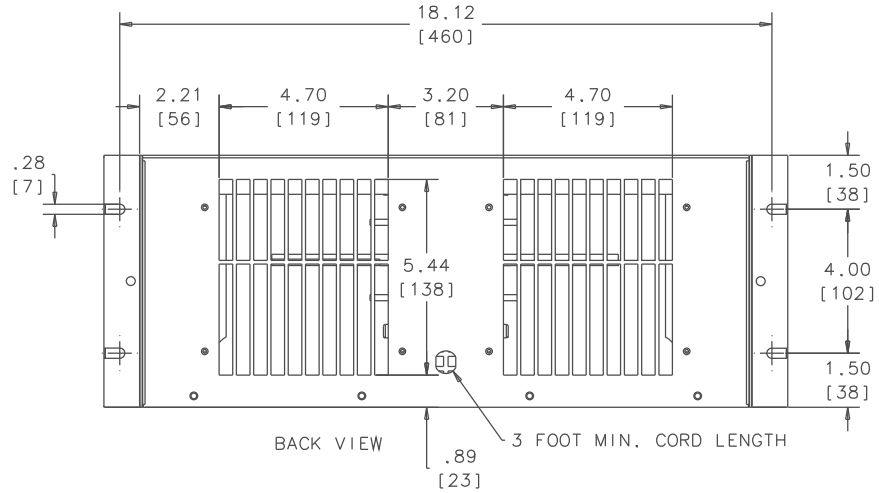

BACK VIEW

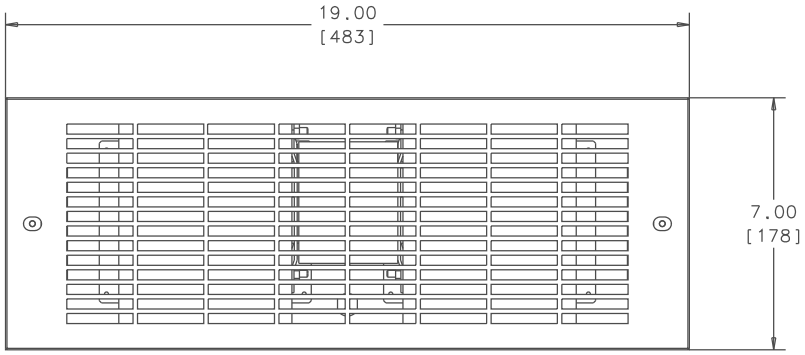

FRONT VIEW

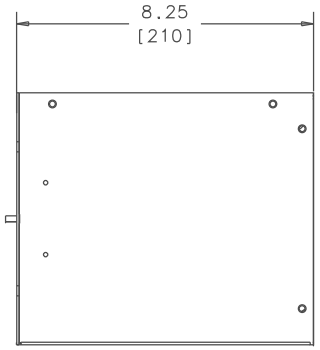

RIGHT SIDE VIEW

NOTE: GRILLE NOT SHOWN IN TOP AND RIGHT SIDE VIEW

ALL DIMENSIONS ARE IN INCHES.
DIMENSIONS DESIGNATED MM ARE IN MILLIMETERS.

UNLESS OTHERWISE SPECIFIED TOLERANCES NON-ACCUMULATIVE

TOL. ON	INCHES	MM
.XX	± .02	±
.XXX	± .010	±
ANGULAR		± 1/2 °

MATERIAL: SEE BOM

UNIT: KP701B

		DATE
DRAWN	Steve Schmierer	5/1/19
CHECKED	JERRY STEDNICK	5/3/19
ENG.	Ron Kaufman	5/6/19
MFG. ENG.		
APPROVED	Bruce Kreeley	5/9/19

KOOLTRONIC, INC
PENNINGTON, NJ USA

TITLE: GENERAL ARRANGEMENT KP701B

CODE IDENT. NO.	SIZE	DWG. NO.	REV
06223	C	3131-00-01	–

SCALE .375=1 | CAD. REF. | SHEET 1 OF 1