KOOLTRONIC
ENCLOSURE COOLING SOLUTIONS

• Better Cooling By Design •



Air Conditioners • Heat Exchangers
Fans • Blowers • Enclosure Accessories

Scan with your smart phone
to visit kooltronic.com

in BLOG

KOOLTRONIC, INC. UL REGISTERED FIRM ISO 9001:2015





KOOLTRONIC, INC., CORPORATE HEADQUARTERS
30 Pennington-Hopewell Road
Pennington, NJ 08534

TEL: (609) 466-3400
FAX: (609) 466-1114

© 2021 Kooltronic, Inc.

TABLE OF CONTENTS

Products in red are legacy products. Legacy products are no longer in normal production. Consult factory for availability.

	Page		Page
INDEX AND SELECTION GUIDES			
Air Conditioners	2	Fans	6
Heat Exchangers	4	Enclosure Accessories	6
Blowers	6		
DESIGN GUIDE			
About the Company	8	Air Conditioner Selection	12
Cooling Product Selection	9	Heat Exchanger Selection	14
Fan and Blower Selection	10	Enclosure Cooling Tips	16
NEMA Enclosure Ratings	11	Glossary/Technical Terms	17
AIR CONDITIONERS			
Introduction and General Specifications	25		
Air-Cooled Panel-Mounted		Traditional (Micro-Mini)	67
Guardian/GuardianX	26	Integrity NEMA 4/4X (P21L)	69
Guardian/GuardianX 480 Volt (2 Legacy)	36	Intrepid Outdoor	71
Access	43	Horizontal Rack-Mount (RML, H9 & H10)	73
SlimKool (2 Legacy)	45	Horizontal Top-Mounted	75
Hazardous Location	52	Advantage	80
Profile (except DP17)	59	TrimLine Water-Cooled Panel-Mounted	81
TrimLine	62	Accessories and Options	86
HEAT EXCHANGERS		Air-to-Air (cont.)	
Introduction and General Specifications	91	KTHE200	104
Air-to-Air		Water-to-Air	
TrimLine	92	KPHE	105
Integrity NEMA 4/4X	95	KNHE NEMA 4/4X	110
KXHE Series	99	Accessories and Options	118
BASIC BLOWERS			
Introduction and General Specifications	121	High Pressure Radial	126
Single Centrifugal	122	Double Centrifugal	128
High Pressure Centrifugal	124	Quadruplex Centrifugal	130
PACKAGED BLOWERS			
Introduction and General Specifications	133	Pagoda	142
Standard Twin	134	Blower and Fan Selection Graph	144
Recessed Twin	136	Accessories and Options	145
EMI/RFI Shielded Twin	138	Automatic Speed Control	147
Broad Discharge Twin	140		
FANS			
Introduction and General Specifications	149	Packaged Fans	158
High Performance Fans	150	Advantage Series Filter Fans	161
Thin Fans	152	Sentry Series Filter Fans	167
Thin Fan Accessories and Options	154	Guardian/GuardianX Series Filter Fans	171
KoolTray II	156	Fan Filter Grille/Hood Assemblies	178
ENCLOSURE ACCESSORIES			
Introduction and General Specifications	183	PTC Heaters	201
Thermostats	184	Lights	205
Hygrostats	190	Miscellaneous	210
Hygrotherms	192	Filter Fan & Exhaust Package	213
Fan Heaters	195		
WARRANTY / RETURN AUTHORIZATION	216	**GENERAL TERMS AND CONDITIONS**	217

KOOLTRONIC AIR CONDITIONERS

Index and Selection Guide

Products in red are legacy products. Legacy products are no longer in normal production. Consult factory for availability.

Guardian/GuardianX Series NEMA 4 or 4X Air-Cooled Panel-Mount, pages 26-35

For NEMA 4 or 4X Enclosures

NEMA 4 or 4X

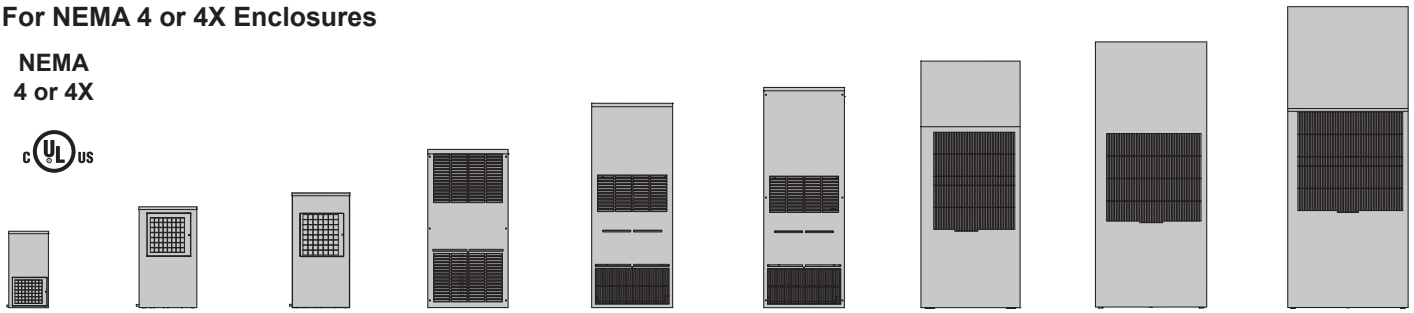

DP15L
1,000 BTU/H
15"Hx8"Wx7"D

DP21L
3,000 BTU/H
21"Hx12"Wx10"D

DP24L
3,000 BTU/H
24"Hx12"Wx10"D

DP33L
5,000 BTU/H
33"Hx17"Wx11"D

DP43L
7,000 BTU/H
43"Hx17"Wx10"D

DP47L
9,000 BTU/H
47"Hx17"Wx10"D

DP50L
14,000 BTU/H
50"Hx20"Wx12"D

DP53L
18,000 BTU/H
53"Hx22"Wx13"D

DP60L
26,000 BTU/H
60"Hx24"Wx13"D

Guardian/GuardianX Series NEMA 4 or 4X 480 Volt, pages 36-42

For NEMA 4 or 4X Enclosures

NEMA 4 or 4X

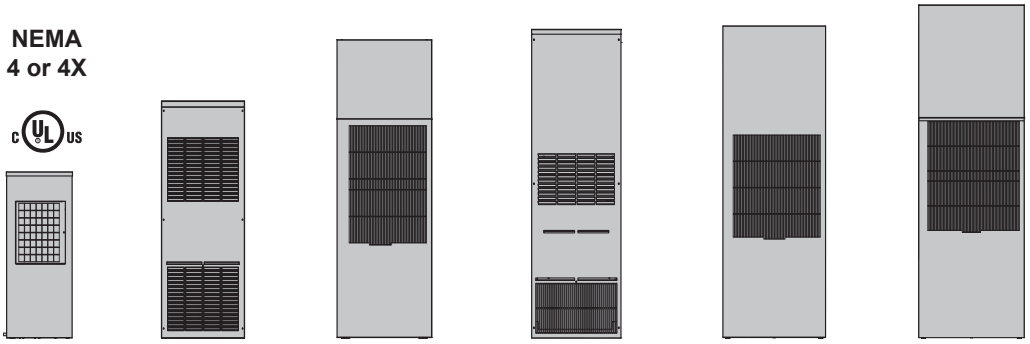

DP24L
480 Volt 1- Phase
3,000 BTU/H
24"H x 12"W x 10"D

DP38L
480 Volt
5,000 BTU/H
39"H x 17"W x 11"D

DP50L
480 Volt
14,000 BTU/H
50"H x 20"W x 13"D

DP52L
480 Volt
7,000 & 9,000 BTU/H
52"H x 17"W x 10"D

DP53L
480 Volt
18,000 BTU/H
53"H x 22"W x 13"D

DP60L
480 Volt
26,000 BTU/H
60"H x 24"W x 16"D

Access Series Ultra Slim Panel-Mount

For NEMA 12 & 3R Enclosures

pages 43-44

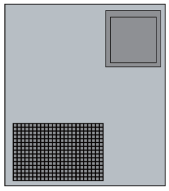

DSP23
2,000 BTU/H
24"H x 22"W x 5"D

SlimKool Series NEMA 4 or 4X Air-Cooled Panel-Mount, pages 45-51

For NEMA 4 or 4X Enclosures

NEMA 4 or 4X

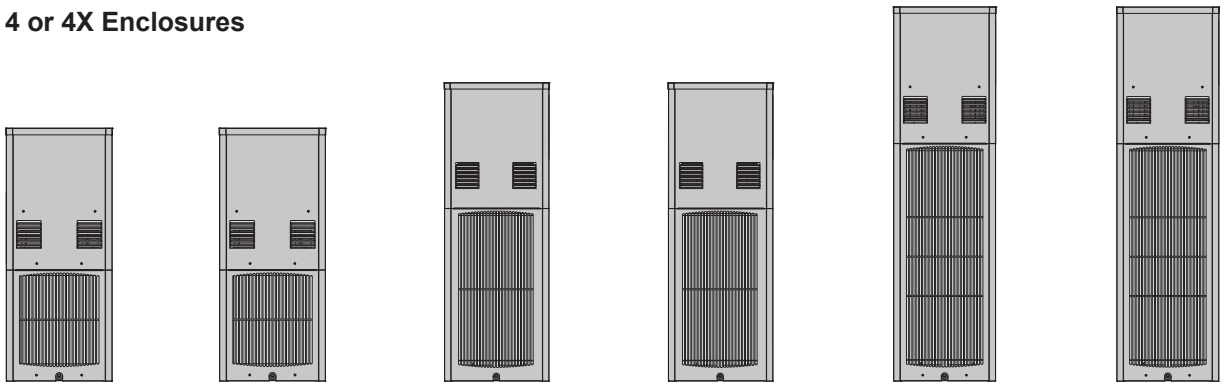

SP28L
4,000 BTU/H
28"Hx12"Wx15"D

SP28LV
480 Volt
4,000 BTU/H
28"Hx12"Wx15"D

SP36L
6,000 & 8,000 BTU/H
36"Hx12"Wx15"D

SP36LV
480 Volt
6,000 & 8,000 BTU/H
36"Hx12"Wx15"D

SP43L
11,000 BTU/H
43"Hx12"Wx15"D

SP43L
480 Volt
11,000 BTU/H
43"Hx12"Wx15"D

KOOLTRONIC AIR CONDITIONERS (cont.)

Index and Selection Guide

Products in red are legacy products. Legacy products are no longer in normal production. Consult factory for availability.

Hazardous Location Series 480 Volt NEMA 4X, pages 52-58

For NEMA 4 or 4X Enclosures

NEMA 4 or 4X

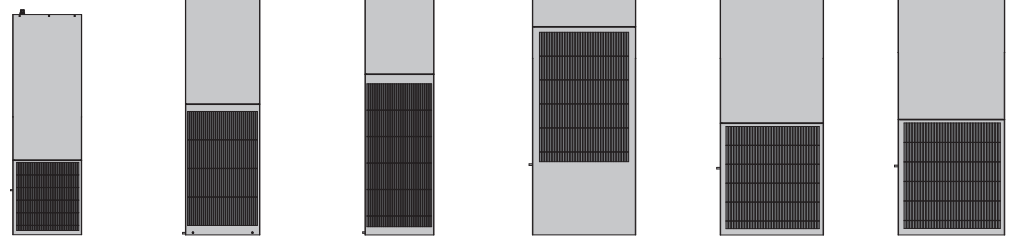

HL28LV
3,000 BTU/H
28"H x 12"W x 16"D

HL40LV
6,000 BTU/H
40"H x 12"W x 16"D

HL48LV
9,000 BTU/H
48"H x 12"W x 16"D

HL56LV
12,000 BTU/H
56"H x 16"W x 21"D

HL58LV
18,000 BTU/H
58"H x 20"W x 21"D

HL60LV
24,000 BTU/H
60"H x 24"W x 22"D

Profile Series Indoor/Outdoor Air-Cooled Panel-Mount, pages 59-61

Internal/External Mount

For NEMA 12 & 3R Enclosures



DP17
2,000 BTU/H
17"H x 12"W x7"D

DP21
3,000 BTU/H
21"H x 13"W x 7"D

Recommended replacement: See *Guardian/GuardianX Series*

TrimLine Series Air-Cooled Panel-Mount, pages 62-66

For NEMA 12 & NEMA 12/3R Enclosures

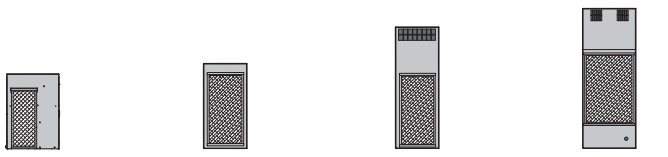

NP17
2,000 BTU/H
17"H x 12"W x 9"D

Narrow-Mini
2,500 BTU/H
20"H x 10"W x 10"D

NP28
4,000 BTU/H
28"H x 10"W x 11"D

NP33
4,000 BTU/H
33"H x 12"W x 9"D

Traditional Air-Cooled Panel-Mount

For NEMA 12 Enclosures

pages 67-68

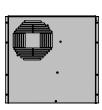

Micro-Mini
1,000 BTU/H
13"H x 14"W x 6"D

Integrity NEMA 4/4X Air-Cooled

For NEMA 4/4X Enclosures

pages 69-70

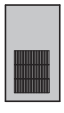

P21L
3,000 BTU/H
21"H x 12"W x 12"D

Intrepid Outdoor

For NEMA 12 & 3R Enclosures

pages 71-72

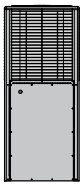

EP56
30,000 BTU/H
56"H x 24"W x 24"D

KOOLTRONIC AIR CONDITIONERS (cont.)

Index and Selection Guide

Products in red are legacy products. Legacy products are no longer in normal production. Consult factory for availability.

Horizontal Air-Cooled Rack-Mount
pages 73-74

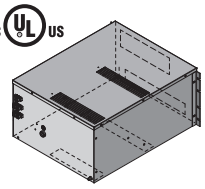

RML
5,000 BTU/H
10"H x 19"W x 22"D

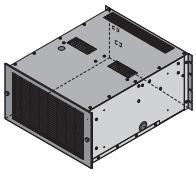

H9
3,500 BTU/H
10"H x 19"W x 22"D

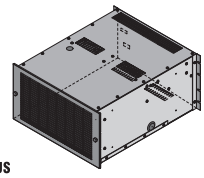

H10
3,500 BTU/H
10"H x 19"W x 22"D

Horizontal Air-Cooled Top-Mount
pages 75-79

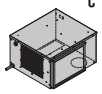

Horizontal Super-Mini
2,500 BTU/H
9"H x 14"W x 16"D

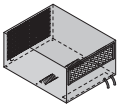

Compact Plus Series
4,200 & 5,000 BTU/H
12"H x 17"W x 22"D

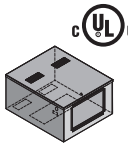

Compact Series
4,000 BTU/H
10"H x 17"W x 20"D

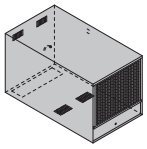

Full-Size Series
12,000 BTU/H
17"H x 17"W x 31"D

Advantage Series Air-Cooled Top-Mount
For NEMA 12 & 3R Enclosures *page 80*

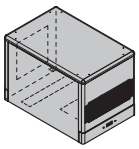

6RTL
6,000 BTU/H
18"H x 17"W x 26"D

TrimLine Series Water-Cooled Panel-Mount
pages 81-85

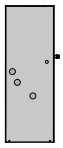

WNP28
4,000 BTU/H
28"H x 10"W x 11"D

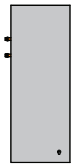

WNP33
4,000 BTU/H
33"H x 12"W x 9"D

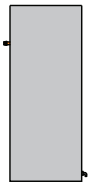

WNP36
4,000 & 6,000 BTU/H
37"H x 15"W x 12"D

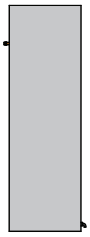

WNP47
7,000 & 12,000 BTU/H
47"H x 15"W x 12"D

KOOLTRONIC HEAT EXCHANGERS

Index and Selection Guide

TrimLine Series Air-to-Air Panel-Mount, pages 92-94

For NEMA 12 Enclosures



KXNP33
33 Watts/ºF
33"H x 12"W x 10"D

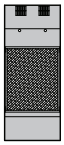

KXNP36
42 Watts/ºF
36"H x 15"W x 10"D



KXNP47
56 Watts/ºF
47"H x 15"W x 10"D



KXNP59
91 Watts/ºF
59"H x 17"W x 14"D

KOOLTRONIC HEAT EXCHANGERS (cont.)

Index and Selection Guide

Integrity Series NEMA 4/4X Air-to-Air Panel-Mount, pages 95-98

For NEMA 4/4X Enclosures

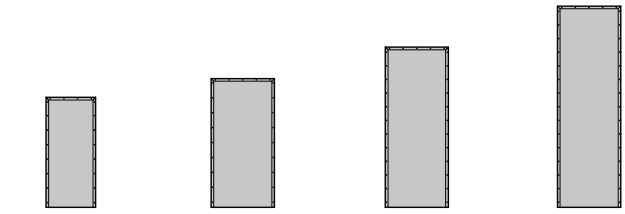

KNHX32
21 Watts/ºF
32"H x 14"W x 13"D

KNHX38
44 Watts/ºF
38"H x 18"W x 18"D

KNHX47
54 Watts/ºF
47"H x 18"W x 18"D

KNHX59
65 Watts/ºF
59"H x 18"W x 18"D

KXHE Series Air-to-Air Panel-Mount, pages 99-103

For NEMA 12 Enclosures

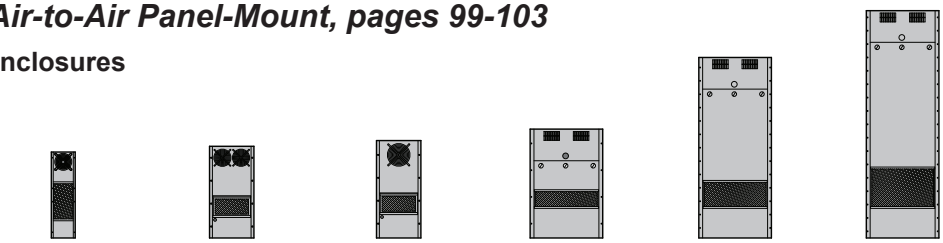

KXHE60A
8 Watts/ºF
22"H x 6"W x 4"D

KXHE120A
16 Watts/ºF
24"H x 11"W x 4"D

KXHE122A
19 Watts/ºF
25"H x 11"W x 8"D

KXHE125A
57 Watts/ºF
28"H x 19"W x 8"D

KXHE245A
72 Watts/ºF
47"H x 19"W x 8"D

KXHE365A
88 Watts/ºF
59"H x 19"W x 8"D

KTHE 200 Air-to-Air, page 104

Refrigerant-charged

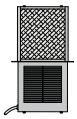

KTHE200
52 Watts/ºF
59"H x 19"W x 8"D

KPHE Series Water-to-Air Panel-Mount, pages 105-109

For NEMA 12 & 3R Enclosures

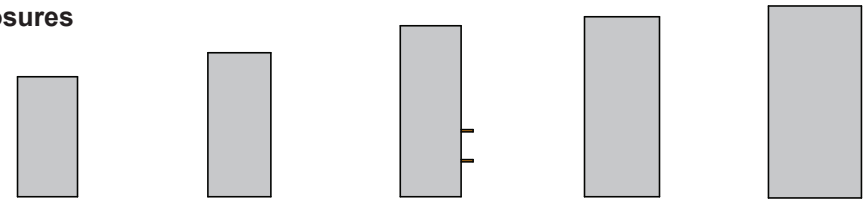

KPHE20
20 Watts/ºF @ 1/4 GPM
21 Watts/ºF @ 1/2 GPM
20"H x 10"W x 4"D

KPHE24
33 Watts/ºF @ 1 GPM
37 Watts/ºF @ 2 GPM
24"H x 10"W x 8"D

KPHE28
42 Watts/ºF @ 1 GPM
50 Watts/ºF @ 2 GPM
28"H x 10"W x 11"D

KPHE30
58 Watts/ºF @ 1 GPM
74 Watts/ºF @ 2 GPM
30"H x 12"W x 11"D

KPHE32
80 Watts/ºF @ 1 GPM
112 Watts/ºF @ 2 GPM
32"H x 15"W x 11"D

KNHE Series NEMA 4/4X Water-to-Air Panel-Mount, pages 110-117

For NEMA 4/4X Enclosures

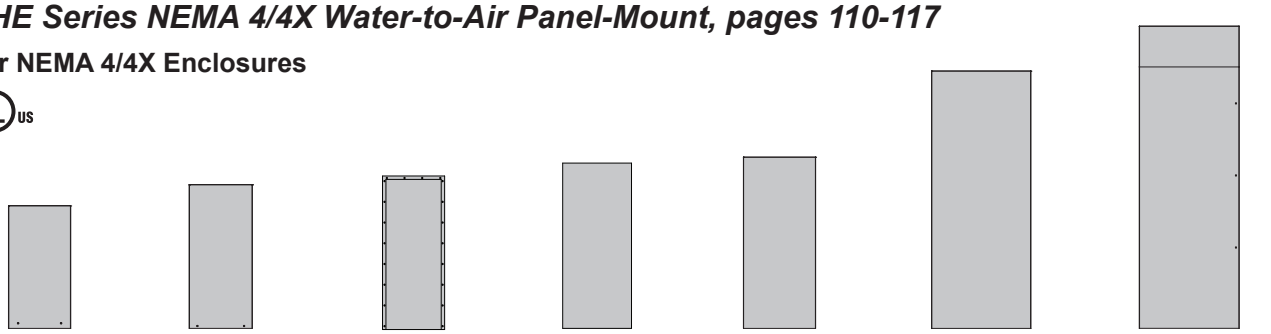

KNHE20
20.5 Watts/ºF @.25 GPM
21.5 Watts/ºF @.50 GPM
20"H x 10"W x 4"D

KNHE24
33 Watts/ºF @ 1 GPM
37 Watts/ºF @ 2 GPM
24"H x 11"W x 8"D

KNHE28
42 Watts/ºF @ 1 GPM
50 Watts/ºF @ 2 GPM
28"H x 11"W x 11"D

KHNE30
58 Watts/ºF @ 1 GPM
74 Watts/ºF @ 2 GPM
30"H x 12"W x 11"D

KNHE32
80 Watts/ºF @ 1 GPM
112 Watts/ºF @ 2 GPM
32"H x 16"W x 11"D

KNHE48
150 Watts/ºF @ 3 GPM
65 Watts/ºF @ 4 GPM
48"H x 20"W x 9"D

KHNE60
190 Watts/ºF @ 3 GPM
215 Watts/ºF @ 4 GPM
61"H x 20"W x 9"D

KOOLTRONIC BLOWERS

Index and Selection Guide

Basic Blowers, pages 121-131

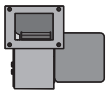

Single Centrifugal
60 - 425 C.F.M.
Cutoff S.P.: 0.85-2.70 I.W.G.

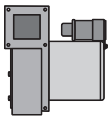

High Pressure Centrifugal
160 - 475 C.F.M.
Cutoff S.P.: 1.9 - 6.3 I.W.G.

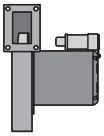

High Pressure Radial
55 - 265 C.F.M.
Cutoff S.P.: 2.3 - 8.0 I.W.G.

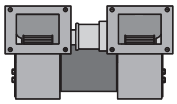

Double Centrifugal
155 - 1200 C.F.M.
Cutoff S.P.: 0.6-2.5 I.W.G.

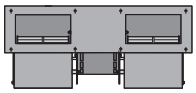

Quadruplex Centrifugal
320 - 920 C.F.M.
Cutoff S.P.: 1.0 - 3.0 I.W.G.

Packaged Blowers, pages 133-143

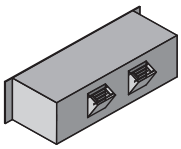

Standard Twin
130 - 800 C.F.M.
Cutoff S.P.: 0.42-1.40 I.W.G.

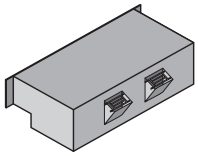

Recessed Twin
130 - 800 C.F.M.
Cutoff S.P.: 0.42-1.40 I.W.G.

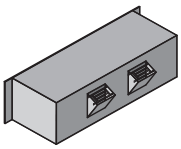

EMI/RFI Shielded
130 - 800 C.F.M.
Cutoff S.P.: 0.42-1.40 I.W.G.

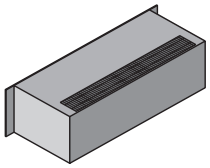

Broad Discharge
270 - 750 C.F.M.
Cutoff S.P.: 0.46-1.35 I.W.G.

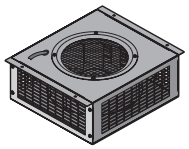

Pagoda
182 - 1615 C.F.M.
Cutoff S.P.: 0.55 - 2.68 I.W.G.

KOOLTRONIC FANS

Index and Selection Guide

Fans, pages 149-170

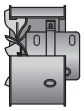

High Performance
200 - 385 C.F.M.

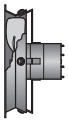

Thin
210 - 750 C.F.M.

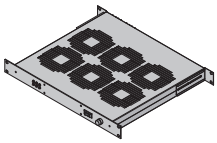

KoolTray II
105 C.F.M. per Fan

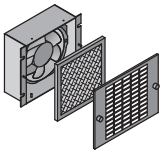

Packaged
105 - 1310 C.F.M.



Advantage Series KBFF
NEMA 12 Filter Fans
32 - 539 C.F.M.*

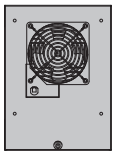

Sentry Series
NEMA 3R Filter Fans
388/405 C.F.M.**

* Fan with grille airflow.

** Fan airflow without filter.

Guardian/GuardianX NEMA 4 and 4X Filter Fans, pages 171-180



KNP32FL
20 / 27 C.F.M.**
8"H x 6"W x 5"D



KNP36FL
26 / 26 C.F.M.**
8"H x 6"W x 5"D*

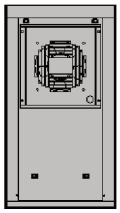

KNP40FL
40 / 45 C.F.M.**
18"H x 10"W x 5"D*

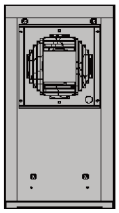

KNP60FL
84 / 92 C.F.M.**
18"H x 10"W x 5"D*

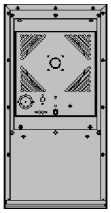

KNP180FL
177 / 179 C.F.M.**
23"H x 12"W x 10"D*

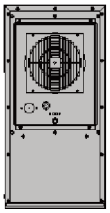

KNP225FL
350 / 444 C.F.M.**
23"H x 12"W x 10"D*

* Fan with grille airflow.

** Fan airflow without filter.

KOOLTRONIC ENCLOSURE ACCESSORIES

Index and Selection Guide

Thermostats, pages 184-189

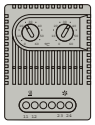

Dual
Thermostat
2.6"H x 1.9"W x 1.8"D



Small
Thermostat
2.3"H x 1.3"W x 1.7"D



Mechanical
Thermostat
2.6"H x 1.9"W x 1.5"D



Mechanical
Thermostat
2.6"H x 1.1"W x 1.7"D

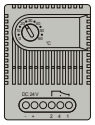

24 VDC
Thermostat
2.6"H x 1.9"W x 1.8"D

Hygrostats, pages 190-191



Mechanical
Hygrostat
2.6"H x 1.9" x 1.5"D

Hygrotherms

pages 192-193



Electronic
Hygrotherm
3.0"H x 2.3" x 1.7"D

Fan Heaters, pages 194-200



KSHET
Compact Fan Heater
5.5"H x 4.0" x 4.5"D
7.5"H x 4.0" x 4.5"D



Foot Mount
Fan Heater
3.9"H x 5.7" x 6.6"D

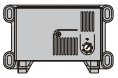

Panel Mount
Fan Heater
3.9"H x 6.3" x 7.7"D



Compact PTC
Fan Heater
5.0"H x 3.9" x 6.5"D



Compact
Fan Heater
1.8"H x 4.6" x 5.9"D
1.8"H x 3.1" x 4.4"D

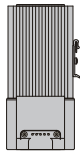

Extruded Aluminum
Compact Fan Heater
7.2"H x 3.9" x 3.1"D
8.7"H x 3.9" x 3.1"D

PTC Heaters, pages 201-204

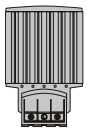

KSEH
PTC Heater
2.6"H x 2.7" x 2.3"D
5.5"H x 2.7" x 2.3"D
8.7"H x 2.7" x 2.3"D



KFEHK
PTC Heater
4.1"H x 2.4" x 2.5"D
6.1"H x 2.4" x 2.5"D
9.1"H x 2.4" x 2.5"D

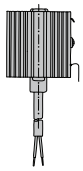

KSEHK
PTC Heater
2.0"H x 1.9" x .98"D
2.8"H x 1.9" x .98"D
4.0"H x 1.9" x .98"D
2.4"H x 1.9" x .98"D

Enclosure Lights, pages 205-209



Compact
Enclosure Light
13.9"H x 2.5" x 2.5"D



Slimline
Enclosure Light
13.5"H x 1.5" x 3.5"D

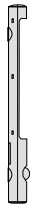

LED Enclosure Light
KSLED
15.6"H x 2.6" x 3.9"D

Miscellaneous, pages 210-212



KSDR
Enclosure Receptacle
3.6"H x 2.4" x 1.8"D



KSDR/FIX
Mounting Aid
13.5"H x 1.5" x 3.5"D

Outdoor Filter Fan and Exhaust Package

pages 213-214

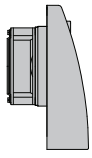

KSFF
Outdoor Filter Fan
8.8"H x 6.5" x 5.0"D

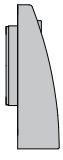

KSEF
Exhaust Package
8.8"H x 6.5" x 3.3"D

ABOUT THE COMPANY…

HISTORY

KOOLTRONIC, INC. was founded in 1956 to address the unique cooling needs of the emerging electronics, computer and telecommunication industries. Our Company engineered the development of the first air conditioners and heat exchangers for sealed enclosures, introduced in the early 1960s. Since then, KOOLTRONIC has evolved into the industry leader, specializing in the innovative design and production of forced ventilation and closed-loop cooling for various types of enclosures. KOOLTRONIC continues to lead today by applying cutting edge technology to the protection of sensitive electronic components.

FACILITIES

KOOLTRONIC'S 170,000 sq. ft. facility is a modern plant and office complex on 100 acres in Pennington, N. J. KOOLTRONIC'S rooftop solar panel system and parking lot canopy system totals approximately 3,900 solar panels working to generate electricity for the facility. This accounts for 90% of the energy requirements on a given day. Our staff, including engineering, sales and manufacturing departments, works as a team to serve our customers' needs. Computer-aided design and development keeps KOOLTRONIC on the leading edge of the cooling industry. The manufacturing department includes computerized fabrication of our products and their sheet metal components. Our facilities also contain on-site custom painting capabilities and testing laboratory, which are state-of-the-art. Having all of these functions under one roof leads to the efficiency and excellence KOOLTRONIC has become known for. As an additional service, we offer our automated powder painting system and our laboratory for our customers' use.

THE KOOLTRONIC ADVANTAGE

KOOLTRONIC'S success is largely due to its focus on cutting edge technology. In the design department we use the same state-of-the-art software used by NASA, Boeing, Harley Davidson and the US Air Force. This software allows us to design every aspect of our products in an efficient, cost effective way while giving our customers the best quality in the industry. Since KOOLTRONIC fabricates its own sheet metal parts, we enjoy a level of self-sufficiency and control over the manufacturing process that is unique in the industry.

CUSTOMER SUPPORT

KOOLTRONIC employees are dedicated to **total customer satisfaction.** The experienced cooling specialists and design engineers at KOOLTRONIC are ready to answer any air moving question you may have. They can assist with model selection, placement, accessories and options, modification or custom-design to achieve the optimum solution **for your application.** In addition, they have access to KOOLTRONIC'S storehouse of previously-designed custom units, which frequently provide the ideal solution to a difficult cooling problem. If an in-stock item is indicated, a sample is available for a 30 day evaluation **in your application, under your conditions,** in order to validate the choice.

MISSION: RESEARCH AND DEVELOPMENT

As a Company Mission we have undertaken a continuing effort to produce new and innovative products. At the same time we continue to improve upon existing product lines in order to anticipate and satisfy the changing needs of the many industries we serve. This catalog includes examples of products developed during the past few years. Research and Development is an ongoing process, with new products announced periodically.

QUALITY ASSURANCE

In order to assure stringent adherence to the highest quality standards, we employ the latest computer-controlled manufacturing practices and state-of-the-art Quality Control procedures. All technical and production employees are trained members of our Quality Assurance Team.

Every unit is run and carefully tested to verify performance to specifications. We have achieved sole source and Certified Vendor status with a number of leading U.S. corporations. We are proud of our quality and on-time delivery records, which are unsurpassed.

CUSTOM CAPABILITY

KOOLTRONIC encourages you to call and discuss solutions to your heat dissipation problems. In most cases, a standard product or modification will provide the answer. If not, we can develop a unique design to meet **your** particular requirements.

STOCKING PROGRAM

Substantial inventories of popular models in every product category are in stock and ready to ship, within 24 hours when needed. We participate in Just-In-Time programs with numerous customers for standard units, as well as volume custom-designed products. KOOLTRONIC has the largest in-stock inventory in the industry.

SERVICE IS OUR COMMITMENT

At KOOLTRONIC, our goals of excellence and responsiveness have been key to customer satisfaction. We are constantly seeking ways to further improve our performance. If you are unable to find the right answer to your problem in this catalog, if you think your application requires a unique design, if you have any questions regarding your cooling requirements or cooling problems in general, please contact your local KOOLTRONIC representative, or call us:

Pennington, New Jersey
(609) 466-3400
FAX (609) 466-1114
We welcome the opportunity to be of service to you.

RoHS COMPLIANT

Except where noted, Kooltronic products are in compliance with European Economic Union (EEU) Reduction of Hazardous Substances (RoHS) Directive 2002/95/EC, except for the exemptions listed under the RoHS Directive.

DESIGN GUIDE

Heat producing components currently widely used in electronic and industrial equipment enclosures present the problem of dissipating the heat generated before damage can occur to heat-sensitive parts. In many cases, the problem can be solved by ventilation, using simple air moving devices. However, in more and more applications the available ambient air is too warm or too contaminated to be used for the safe dissipation of the unwanted heat. Under those conditions, the life expectancy and performance of sensitive components may be adversely affected, often causing equipment malfunctions, slowdowns or failures.

In forced convection cooling of enclosures, cooler ambient air is drawn or forced through the components in an enclosure and discharged. When electronic/electrical enclosures are sealed to keep out moisture, dust, dirt and other contaminants, the heat generated by the components is trapped and closed-loop cooling (air conditioner or heat exchanger) is needed to maintain the optimum environment for the components.

This Design Guide/Catalog is not merely a collection of product offerings. It is intended as a design aid to be used as a problem-prevention and problem-solving tool, with an extensive array of equipment and specifications so that the best-suited items can be selected as the solutions for virtually every type of enclosure ventilation or cooling requirement. **Refer to the Glossary/Technical Comments on page 17 for support with technical terms and additional design information.**

COOLING PRODUCT SELECTION

The KOOLTRONIC philosophy is to specify the smallest, least complex cooling device that will satisfy the requirements of the application.

Forced Ventilation Air Cooling

In clean, non-hazardous environments with acceptable ambient temperatures, a simple forced-air cooling system utilizing ambient air is usually adequate. Combined with a low-cost air filter, such devices generally meet the heat removal needs of typical electronic and electrical equipment.

Closed-Loop Cooling

In harsh environments involving high temperatures, heavy particulates, oil, or chemicals capable of damaging components, ambient air must be kept out of the enclosure. Sealed enclosures are generally used, with closed-loop cooling consisting of two separate circulation systems in a single unit. One system, sealed against the ambient air, cools and recirculates the clean cool air throughout the enclosure. The second system uses ambient air or water to remove and discharge the heat.

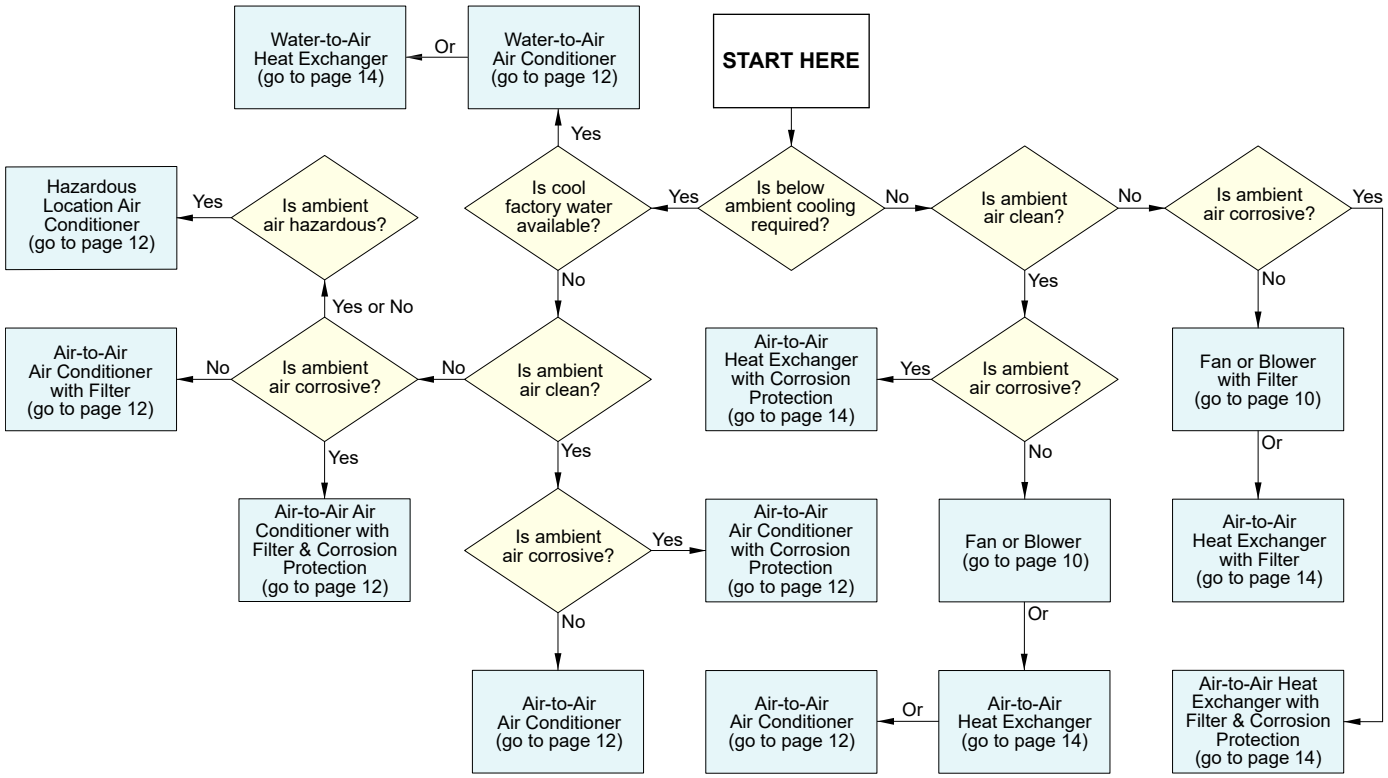

FAN AND BLOWER SELECTION

DETERMINE THE AIRFLOW REQUIRED:

STEP 1: Determine the amount of heat to be removed (in watts). This step is the same procedure as used for the selection of heat exchangers (See Page 12). The example on page 12 identifies 922 watts for the total cooling capacity required, which equals the total heat needed to be dissipated (removed).

STEP 2: Determine the Delta T. This value is described by the formula:
Delta T = MAXIMUM ALLOWABLE INTERNAL ENCLOSURE TEMPERATURE - MAXIMUM OUTSIDE AMBIENT (ΔT = MAIET - MOA).
These numbers have already been identified on page 12 in step 2.
The example used there was 120ºF - 110ºF = 10ºF Delta T.

STEP 3: Plot the values for your applications. On the graph below, locate the watts to be dissipated (922W). Draw a horizontal line over to the diagonal line that represents your Delta T (10ºF). Draw a vertical line down. This is the airflow (CFM) needed for your application. In our example the CFM is 365.

Based on standard air density (.075 lbs. per cubic foot), the graph provides quick solutions for the following equations:

Temperature rise in degrees Fahrenheit: CFM = (3.17 x P x 1.25) / Delta T
Example: (3.17 x 922 x 1.25) / 10 = 365.34 CFM

Temperature rise in degrees Celsius (Centigrade): CFM = (1.76 x P x 1.25) / Delta T

CFM = Cubic Feet per Minute

P = Power to be dissipated in watts

Delta T = (see step 2 above)

These formulas include a “safety factor” of 25 percent more air than is strictly required by theory. This is expressed by the constant 1.25 in the formulas above.

STEP 4: Select the System. On the flow chart below, select the type of air moving product that you need.

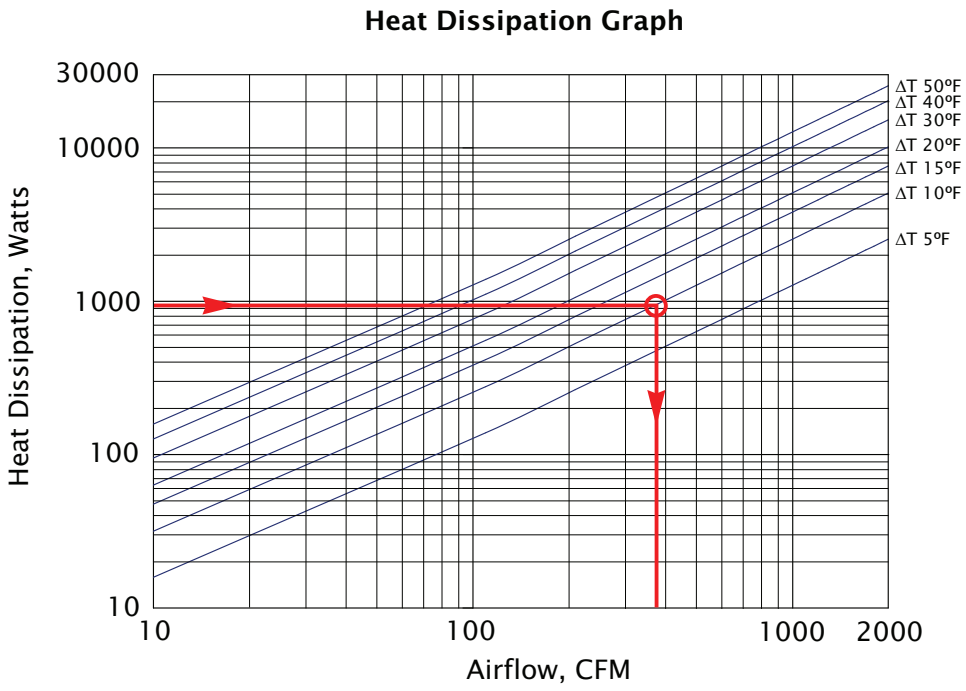

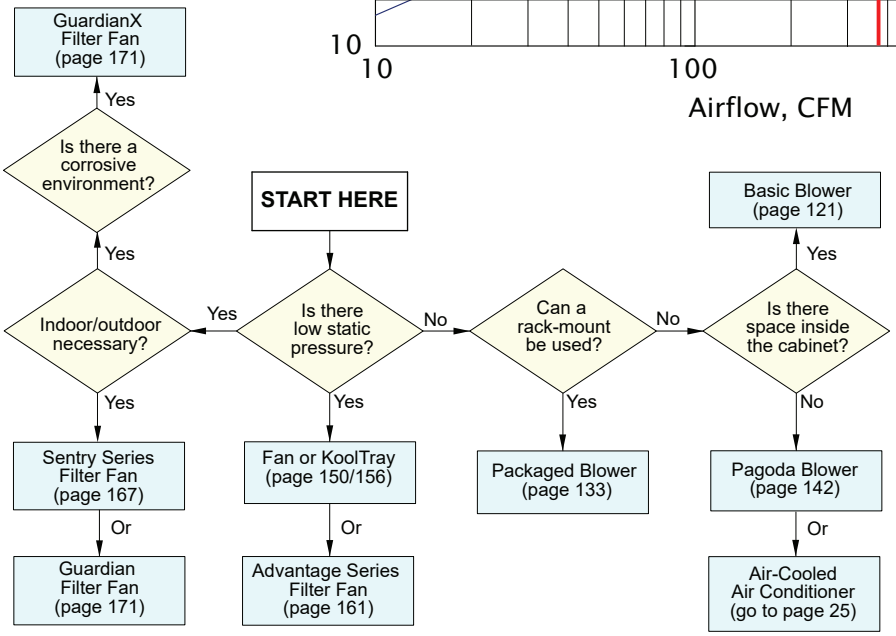

NEMA ENCLOSURE RATINGS

Air conditioners typically carry an agency marking such as UL (Underwriters Laboratories), which designates the environmental hazard from which the contents are being protected. This marking should be matched to the enclosure to be cooled. Typical examples include NEMA 12 (indoor use, protection from dust and dripping liquids), NEMA 3R (indoor or outdoor use and rainproof), NEMA 4 (indoor or outdoor use, protection from wash-down) and NEMA 4X (indoor or outdoor use, protection from corrosive environments).

Environments:	NEMA 1	NEMA 12	NEMA 3R	NEMA 4	NEMA 4X
Indoor use only	✔	✔			
Indoor and outdoor use			✔	✔	✔
Falling liquids and light splashing		✔	✔	✔	✔
Non-hazardous dust, lint, fibers		✔		✔	✔
Washdowns and splashing water				✔	✔
Oil and coolant seepage		✔			
Corrosive agents					✔
Hazardous Location (Class I, Division 1 & 2)					✔

Kooltronic offers cooling solutions for situations that fall under these NEMA ratings. We can develop a unique design to meet your particular requirements. Consult with Kooltronic's design and engineering staff to discuss your heat dissipation problems.

For more information on our thermal management products please visit:

kooltronic.com

30 PENNINGTON-HOPEWELL ROAD
PENNINGTON, NEW JERSEY 08534
TEL: **609-466-3400** FAX: 609-466-1114

Email: sales@kooltronic.com

AIR CONDITIONER SELECTION

(for Heat Exchanger applications, see page 14)

DETERMINE THE COOLING CAPACITY REQUIRED:

Air conditioners for cooling electrical enclosures should be sized to provide adequate cooling for the anticipated worst case conditions. This is usually when the ambient is the highest, and also when the electrical loads through the enclosure are at the maximum. However the air conditioner should not be over-sized, as this could result in compressor short cycling. This might cause wide swings in enclosure temperatures.

The total cooling capacity required of the air conditioner includes the:

(A) INTERNAL HEAT LOAD, (B) SOLAR HEAT LOAD and (C) HEAT LOAD TRANSFER.

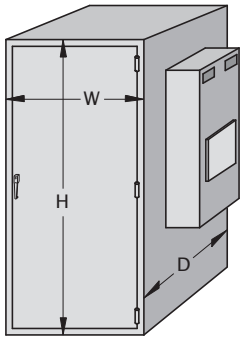

(A) The INTERNAL HEAT LOAD is the heat generated by the components within the enclosure.

(B) The SOLAR HEAT LOAD is the additional heat due to the sun's rays.
NOTE: Unfortunately the calculation required to properly identify the true Solar Heat Load is too extensive to provide here. Therefore we recommend you call the Kooltronic Sales Department. They have access to a computer program that will provide an accurate answer after a few simple questions. If you have an outdoor application, do not ignore the solar heat load. It can be substantial.

(C) The HEAT LOAD TRANSFER is the additional heat that is added through the walls of the enclosure. (This statement assumes the outside ambient is warmer than the air inside the enclosure.)
NOTE: Refer to the Glossary/Technical Comments section for explanations of technical terms and more information about Engineering issues.

STEP 1: Calculate the Internal Heat Load by using the Incoming / Outgoing Power Test Method

The Internal Heat Load can be determined by measuring the electrical energy that stays inside the enclosure. It is assumed that this energy is eventually transformed into waste heat. To measure this electricity, the current going In and Out must be measured in amps. The voltage of this current is also important. It is critical that all wires entering and leaving the enclosure must be included.Typically, a voltmeter and a clamp-on type ammeter should be used. The data must be recorded during the time when the current flow is the highest. A qualified technician is recommended for safety and accuracy reasons.The Internal Heat Load = 3.413 x Voltage (Current IN - Current OUT.) NOTE: This equation is derived from: 3.413 BTU = 1 Watt *and* watts = volts x amps. For example, if you measured 220 volts, 40 amps IN, 35 amps OUT, the Internal Heat Load = 3.413 x 220 x (40 - 35) = 3754 BTU/H. Consult with an Electrical Engineer if 3 phase power or a very complicated circuit is involved.

STEP 2: Calculate the Heat Load Transfer

The heat load transfer is the additional heat added to the enclosure through the walls from the surrounding ambient. This is identified by the formula:
Heat Load Transfer = (Max. Outside Ambient - Max. Allowable Internal Enclosure Temperature) x Surface Area x 1.25
HLT = (MOA - MAIET) x SA x 1.25
NOTE: 1.25 is a constant for metal enclosures. Use 0.8 for a plastic enclosure or 0.6 for an insulated enclosure.

The Maximum Outside Ambient (MOA) is the warmest room temperature surrounding the enclosure that might happen all year long. The MOA might be as high as 130ºF in an industrial equipment room. The Maximum Allowable Internal Enclosure Temperature (MAIET) should not exceed the heat tolerance specification of the most sensitive component in your system. The MAIET might not be allowed to go over 90ºF per the enclosure's component specifications.

The Surface Area (SA) is calculated as follows:

Surface Area = (H x W) + (H x W) + (H x D) + (H x D) + (W x D)

H = height in feet, W = width in feet, D = depth in feet

For example; H = 4, W = 2, D = 3: Surface area = (4 x 2) + (4 x 2) + (4 x 3) + (4 x 3) + (2 x 3) = 46sq.ft.

Therefore in our example, the HLT = (130ºF - 90ºF) x 46 x 1.25 = 2300 BTU/H

STEP 3: Calculate the Total Cooling Capacity Required

The total cooling capacity required to cool your equipment is equal to:

Internal Heat Load + the Heat Load Transfer. The example: 3754 + 2300 = 6054 BTU/H

AIR CONDITIONER PERFORMANCE CHART EXPLANATION:

In the air conditioner section there are detailed specifications for each cooling system and a performance chart similar to the one shown below. Use the charts to verify that the correct unit, with the proper cooling capacity, has been selected.

Example:

- The maximum ambient temperature is 110ºF.
- The maximum enclosure air temperature is 100ºF.
- The minimum air conditioner capacity is 8,000 BTU/H.

1. Locate the 110ºF requirement at the bottom of the example chart.
2. Follow the vertical line up until it intersects with the 100ºF maximum enclosure air temperature.
3. Follow the horizontal line to identify the actual cooling capacity that the unit will deliver at these conditions.
4. In this case, the unit will deliver approximately 8,000 BTU/H which is acceptable. If the unit's capacity under this condition was below 8,000 BTU/H, select another model with more capacity. If the capacity was significantly above the 8,000 BTU/H requirement, the next size smaller model should be selected.

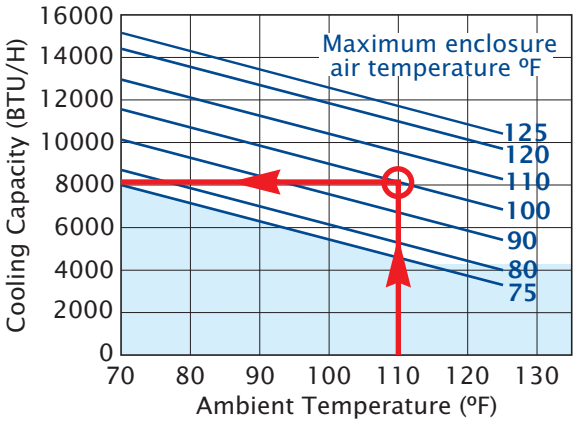

SELECT THE APPROPRIATE AIR CONDITIONER PRODUCT LINE:

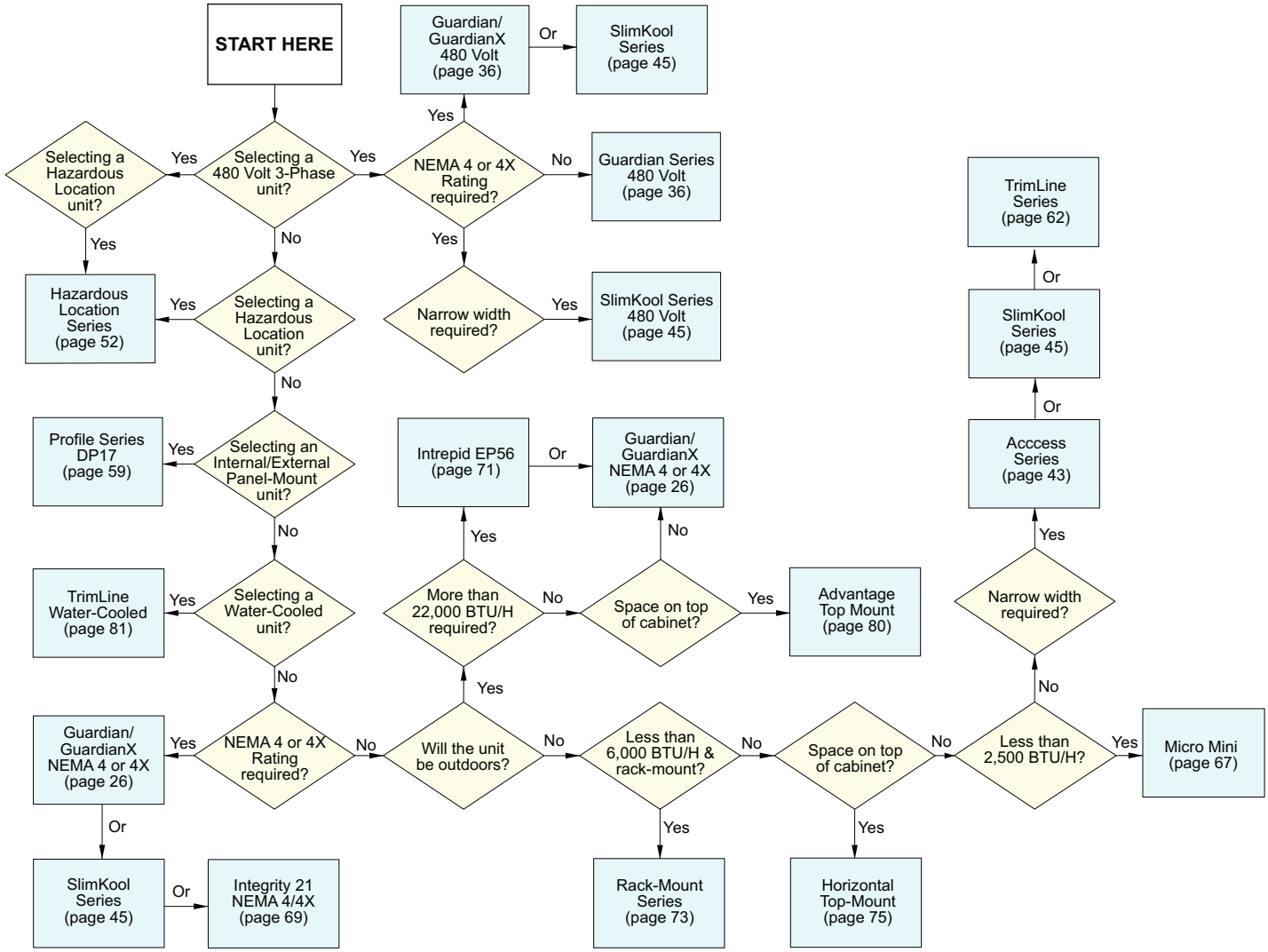

HEAT EXCHANGER SELECTION

(for Air Conditioner applications, see page 12)

DETERMINE THE COOLING CAPACITY REQUIRED:

Heat exchangers for cooling electronic/electrical enclosures should be sized to provide adequate cooling for the anticipated worst case conditions. This is usually when the ambient is the highest, and also when the electrical loads through the enclosure are at the maximum. The outward portion of the heat exchanger uses either water or ambient air in the cooling process. The heat exchanger cannot cool the cabinet below the temperature of that water (or air). The greater the temperature differential between 1) the hot internal enclosure air and 2) the cooling water (or air), then, the higher the capacity of any heat exchanger will be. Conversely the smaller the temperature differential available in an application, the larger the heat exchanger size needs to be to achieve the goal.

The total cooling capacity required of the heat exchanger includes the:

(A) INTERNAL HEAT LOAD, (B) SOLAR HEAT LOAD and (C) HEAT LOAD TRANSFER.

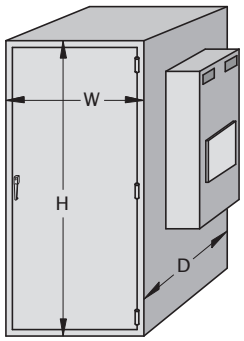

(A) The INTERNAL HEAT LOAD is the heat generated by the components within the enclosure.
(B) The SOLAR HEAT LOAD is the additional heat due to the sun's rays.
NOTE: Unfortunately the calculation required to properly identify the true Solar Heat Load is too extensive to provide here. Therefore we recommend you call the Kooltronic Sales Department. They have access to a computer program that will provide an accurate answer after a few simple questions. If you have an outdoor application, do not ignore the solar heat load. It can be substantial.

(C) The HEAT LOAD TRANSFER is the heat that is lost through the walls of the enclosure. (This statement assumes the outside ambient is cooler than the air inside the enclosure.)
NOTE: Refer to the Glossary/Technical Comments section for explanations of technical terms and more information about Engineering issues.

STEP 1: Calculate the Internal Heat Load by using the Incoming / Outgoing Power Test Method

The Internal Heat Load can be determined by measuring the electrical energy that stays inside the enclosure. It is assumed that this energy is eventually transformed into waste heat. To measure this electricity, the current going In and Out must be measured in amps. The voltage of this current is also important. It is critical that all wires entering and leaving the enclosure must be included. Typically, a voltmeter and a clamp-on type ammeter should be used. The data must be recorded during the time when the current flow is the highest. A qualified technician is recommended for safety and accuracy reasons.
The Internal Heat Load = 3.413 x Voltage (Current IN - Current OUT.)
NOTE: This equation is derived from: 3.413 BTU = 1 Watt *and* watts = volts x amps. For example, if you measured 220 volts, 40 amps IN, 35 amps OUT, the Internal Heat Load = 3.413 x 220 x (40 - 35) = 3754 BTU/H. Consult with an Electrical Engineer if 3 phase power or a very complicated circuit is involved.

STEP 2: Calculate the Heat Load Transfer

The heat load transfer is the additional heat lost through the enclosure walls to the surrounding ambient. This is identified by the formula:
Heat Load Transfer = (Max. Outside Ambient - Max. Allowable Internal Enclosure Temperature) x Surface Area x 1.25
HLT = (MOA - MAIET) x SA X 1.25
NOTE: 1.25 is a constant for metal enclosures. Use 0.8 for a plastic enclosure or 0.6 for an insulated enclosure.

The Maximum Outside Ambient (MOA) is the warmest room temperature surrounding the enclosure that might happen all year long. The MOA might be as high as 110ºF. The Maximum Allowable Internal Enclosure Temperature (MAIET) should not exceed the heat tolerance specification of the most sensitive component in your system. The MAIET might not be allowed to go over 120ºF per the enclosure's component specifications.
The Surface Area (SA) is calculated as follows: Surface Area = (H x W) + (H x W) + (H x D) + (H x D) + (W x D).
H = height in feet, W = width in feet, D = depth in feet. For example: H = 4, W = 2, D = 3: Surface area = (4 x 2) + (4 x 2) + (4 x 3) + (4 x 3) + (2 x 3) = 46sq. ft. Therefore in our example, the HLT = (110ºF - 120ºF) x 46 X 1.25 = -575 BTU/H.

STEP 3: Calculate the Total Cooling Capacity Required

The total cooling capacity required to cool your equipment is equal to: Internal Heat Load + Heat Load Transfer. The example: 3754 + (-575) = 3179 BTU/H. The performance of heat exchangers is expressed in WATTS/ºF. Therefore you will need to convert the BTUs to WATTS, so multiply by .29 The example; 3179 BTUs x .29 = 922 watts = Total Cooling Capacity Required.

STEP 4: Selecting the Heat Exchanger Performance Rating

Calculate the Temperature Differential: MAIET - MOA. Use the numbers select in Step 2: 120ºF - 110ºF = 10ºF.
Divide the Total Cooling Capacity Required from Step 3 by the Temperature Differential to reach the required Watts/ºF for this application. Example: 922 ÷ 10ºF = 92.2 Watts/ºF.
NOTE: If the Temperature Differential in step 3 can be increased to 15ºF (by changing the Maximum Outside Ambient and/or the Maximum Allowable Internal Enclosure Temperature) then a smaller heat exchanger (rated at 61 Watts/ºF) can be used. **NOTE: If Heat Exchanger is determined to be inadequate for your application see Air Conditioner Selection Guide on page 10 or contact Kooltronic at (609) 466-3400.**

HEAT EXCHANGER CAPACITY IN WATTS

TEMPERATURE DIFFERENCE

CABINET HOT AIR minus COOLER OUTSIDE AMBIENT AIR (or WATER)

HEAT EXCHANGER PERFORMANCE RATING (WATTS/°F)	5	10	15	20	25	30	35	40	45	50
8	40	80	120	160	200	240	280	320	360	400
10	50	100	150	200	250	300	350	400	450	500
16	80	160	240	360	400	480	560	640	720	800
17	85	170	255	340	425	510	595	680	765	850
18	90	180	270	360	450	540	630	720	810	900
19	95	190	285	380	475	570	665	760	855	950
21	105	210	315	420	525	630	735	840	945	1050
22	110	220	330	440	550	660	770	880	990	1100
26	130	260	390	520	650	780	910	1040	1170	1300
27	135	270	405	540	675	810	945	1080	1215	1350
28	140	280	420	560	700	840	980	1120	1260	1400
30	150	300	450	600	750	900	1050	1200	1350	1500
33	165	330	495	660	825	990	1155	1320	1485	1650
37	185	370	555	740	925	1110	1295	1480	1665	1850
42	210	420	630	840	1050	1260	1470	1680	1890	2100
44	220	440	660	880	1100	1320	1540	1960	1980	2200
52	260	520	780	1040	1350	1560	1820	2080	2340	2600
54	270	540	810	1080	1350	1620	1890	2160	2430	2700
55	275	550	825	1100	1375	1650	1925	2200	2475	2750
56	280	560	840	1120	1400	1680	1960	2240	2520	2800
57	285	570	855	1140	1425	1710	1995	2280	2565	2850
65	325	650	975	1300	1625	1950	2275	2600	2925	3250
66	330	660	990	1320	1650	1980	2310	2640	2970	3300
68	340	680	1020	1360	1700	2040	2380	2720	3060	3400
74	370	740	1110	1480	1850	2220	2590	2960	3330	3700
79	395	790	1185	1580	1975	2370	2765	3160	3555	3950
88	440	880	1320	1760	2200	2640	3080	3520	3960	4400
91	455	910	1365	1820	2275	2730	3185	3640	4095	4550
96	480	960	1440	1920	2400	2880	3360	3840	4320	4800
118	590	1180	1770	2360	2950	3540	4130	4720	5310	5900

TO CONVERT WATTS TO BTU'S, MULTIPLY BY 3.413
1 WATT = 3.413 BTU'S

The boxes above highlighted in yellow demonstrate the benefit of having cooler ambient air available. For example, if you need to eliminate 500 Watts and have 5 degrees of temperature difference, you will need a heat exchanger rated at 118 Watts/°F. But, if ambient air can be reduced by 5°, or 5° warmer cabinet temperature is acceptable, then the temperature difference changes to 10°F. This will allow you to select a smaller heat exchanger rated at 55 Watts/°F.

SELECT THE APPROPRIATE HEAT EXCHANGER PRODUCT LINE:

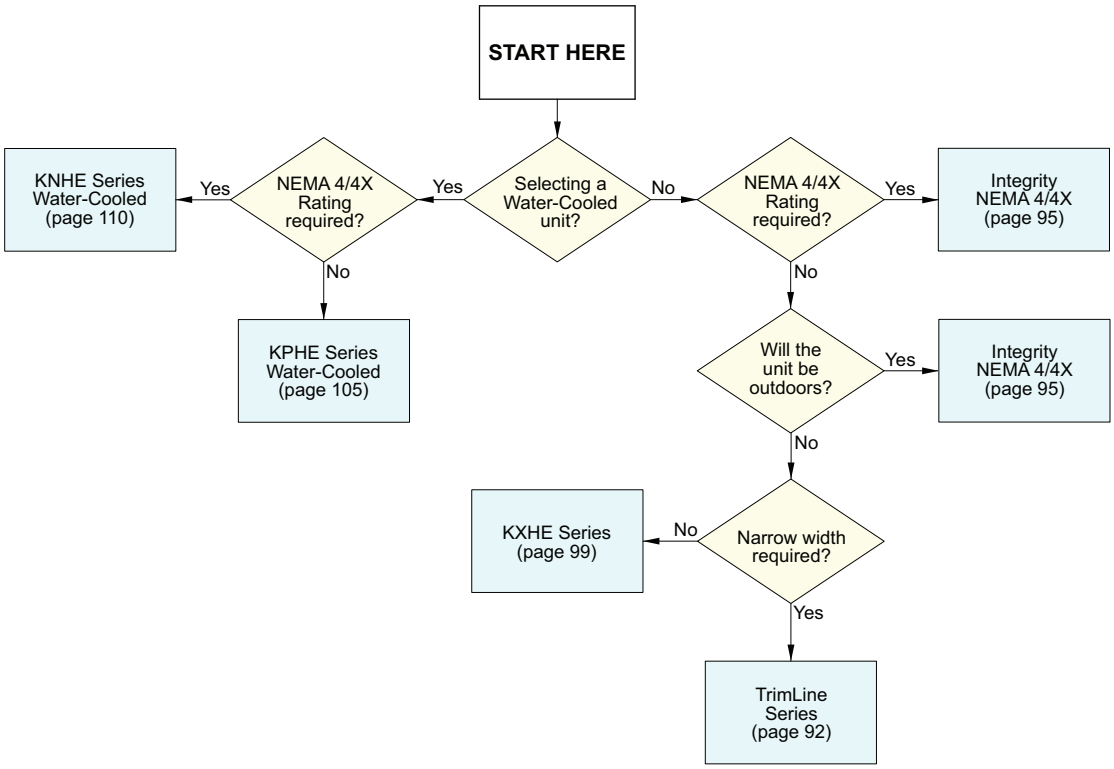

ENCLOSURE COOLING TIPS

THINK ABOUT COOLING...EARLY! - Cooling needs should be evaluated early in the design process. Nearly all systems require some degree of forced cooling. Early estimates of the location of components in the cabinet, the heat to be dissipated and the amount of space needed for the cooling device will save time, trouble and expense.

FORCED VENTILATION VS. CLOSED-LOOP COOLING - Keep it simple. If ambient air is cool and clean enough, use it. It's free. If the ambient is too hot, dirty or corrosive, a closed-loop system is needed. A heat exchanger is usually a lower-cost choice than an air conditioner. See if it will do the job. Don't over-cool. Don't oversize the cooling equipment.

FAN OR BLOWER? - Propeller fans are designed to move large volumes of air at low static pressure. Blowers are used in higher static pressure applications and are at maximum efficiency when operating near their peak static pressure. Figure 2 shows their relative operating characteristics.

PRESSURIZE, DON'T VACUUMIZE! - Pressurization of the cabinet is far more desirable than drawing the air out. Plan to pump filtered air INTO the cabinet, to gain the advantage of using cracks between panels, around doors or other small openings as part of the exhaust area rather than as sources for the intake of dust and dirt. If pressurization is impossible and a fan or blower must be used to exhaust the enclosure, a filter at the air inlet is recommended.

KEEP IT CLEAN - Nothing is more important than CLEAN filters. Clogged filters restrict airflow and cause motors, compressors, etc. to work harder and fail prematurely. Timely filter servicing is vital to your system.

RELATIVE OPERATING CHARACTERISTICS OF FANS AND BLOWERS

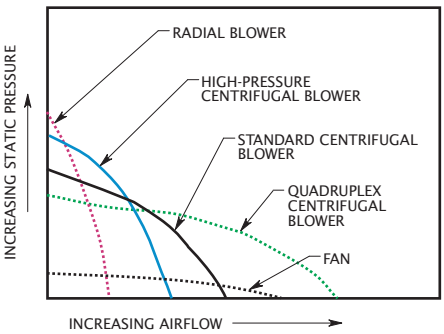

KEEP INLET AND EXHAUST AIR FAR APART - Be sure that all of the exhaust area is located downstream, as far as possible from the air inlet and beyond all heat-producing components. An open-base cabinet sitting only one-quarter inch off the floor can waste a substantial percentage of cooling air even if the air is directed upward initially. A properly planned air path will avoid all "short circuits" or losses by forcing the cool supply air to pass through the components that are to be cooled before reaching the exhaust area. This will allow for a maximum of cooling efficiency.

LET NATURE HELP - Cooling air should enter the enclosure from as low as possible and leave the enclosure from above the highest hot component. Thus, the forced air flows upward through the heat-producing components and adds to the natural buoyancy of the heated air.

A "BOOSTER" CAN SAVE SPACE AND COST - A booster fan located downstream or at the outlet can draw added cooling power through densely packed components. It could permit the use of a smaller, quieter packaged blower than originally indicated, allowing more panel space for other uses.

ENTERING AIR NEEDS EXIT ROOM - The cross-section area of the airstream throughout the flow path in the cabinet should be at least equal to the effective area of the air intake. If this ratio is less, "choking" of the delivered air may result. The table shown on the right gives the recommended area which should be available for discharge.

For intake and exhaust grille and filter grille assemblies, see the Accessories and Options sections.

19-inch Front Panel Intake

3.50"	[88.9mm]	34 sq. in.	[219 sq. cm]
5.25"	[133.4mm]	51 sq. in.	[329 sq. cm]
7.00"	[177.8mm]	68 sq. in.	[439 sq. cm]
8.75"	[222.3mm]	85 sq. in.	[548 sq. cm]
10.50"	[266.7mm]	102 sq. in.	[658 sq. cm]

Circular Fan Intake

6.50"	[165.1mm]	33 sq. in.	[213 sq. cm]
8.00"	[203.2mm]	50 sq. in.	[323 sq. cm]
9.00"	[228.6mm]	64 sq. in.	[413 sq. cm]
9.50"	[241.3mm]	71 sq. in.	[458 sq. cm]
10.00"	[254.0mm]	78 sq. in.	[503 sq. cm]

USE DUCTS FOR EVEN COOLING - If the maintenance of an even temperature from top to bottom of the enclosure is important, ducts along the sides of the enclosure offer an ideal solution. Multiple duct outlets allow precise control of the location and quantity of air delivered.

COMPONENT LOCATION - Where possible, locate heat sensitive electrical components toward the bottom of the enclosure, since the warmest air temperatures will be at the top. Maintain adequate spacing between components within the enclosure to minimize airflow restriction.

BAFFLES SOMETIMES WORK WONDERS - At times, an excessively hot component or an isolated area in the enclosure presents a problem in an otherwise well-cooled system. A baffle to channel air across the location is often the best solution.

VIBRATION ISOLATION - Neoprene vibration isolators minimize the possibility of trouble associated with vibration. All portions of a system will respond to periodic forces in varying degrees. This excitation can occur regardless of the balance or design of the air-moving equipment, since any given construction could be in resonance with any of the driving forces in the blower motor. If the sympathetic vibration level is unacceptable, slight weight change or redistribution will usually alleviate the problem.

CALL KOOLTRONIC FOR HELP - For help with your design problems or to resolve questions, give us a call.

GLOSSARY/TECHNICAL TERMS

AIR CONDITIONER An air conditioner uses a refrigerant system and an air moving system to cool air.

A typical "Special Purpose Air Conditioner" operates as follows: Heat is transferred from the enclosure components by circulating air around and through them, the air is then cooled, dehumidified and returned to the enclosure without the admission of air from the outdoors. The heat is removed from this air within the air conditioner and discharged by means of a vapor compression refrigeration cycle. This takes place in a hermetically sealed system, utilizing either an air-cooled or water-cooled condenser coil. A schematic of a typical air conditioner is illustrated below.

Typical TRIMLINE Series Air Conditioner

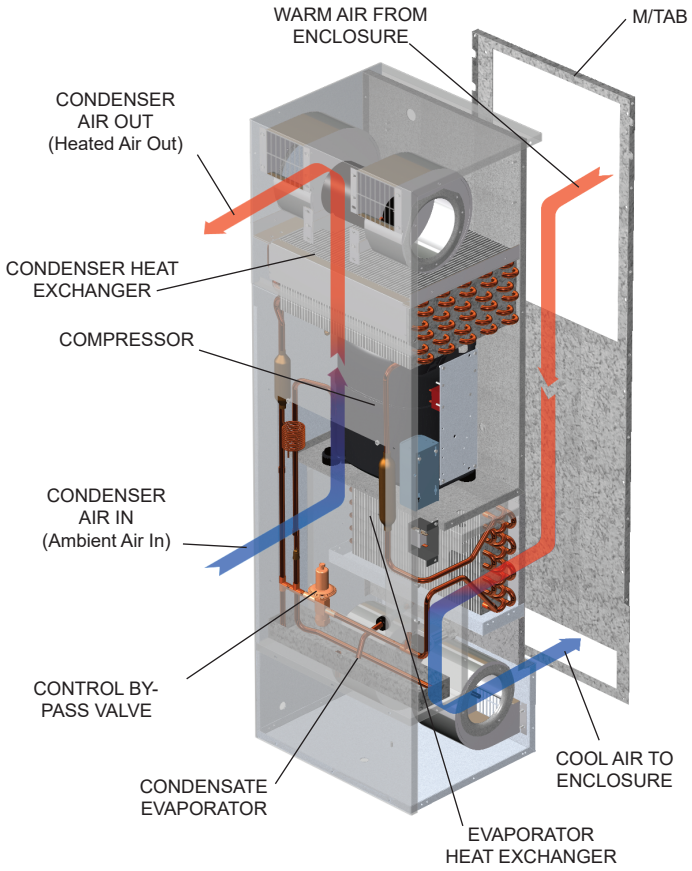

The compressor forces refrigerant, in vapor form, into the condenser coil where it is cooled by ambient air. As it cools, the refrigerant condenses into a liquid, which is passed through a filter to remove impurities and excess moisture. The liquid refrigerant flow is metered by a thermostatic expansion valve (or capillary tube), to control its flow into the evaporator coil.

The liquid refrigerant enters the evaporator and begins to evaporate (vaporize) into a gas. As the hot air from the enclosure passes through the evaporator coil, the heat is transferred to the refrigerant, converting the refrigerant to vapor. High levels of humidity present in the air are removed by condensation; the water is drained to the outside or re-evaporated into the outside air. This cool, dehumidified air is then returned to the cabinet. After the heat is transferred to the refrigerant in the evaporator, the refrigerant passes into an accumulator, where any remaining liquid is separated. The gas then returns to the compressor to repeat the cycle in a continuous process.

Control of the system is generally kept simple. When power is applied to the air conditioner the evaporator blower (or fan) starts and runs continuously. If the temperature within the enclosure is high, the condenser blower and the compressor turn on, operating until the thermostat setting is reached. The thermostat is used as a low limit setting. This is typically 75ºF, the point at which the compressor and the condenser blower is turned off. Air within the enclosure continues to be circulated by the evaporator blower, picking up heat from the components within the cabinet. The thermostat has a differential setting that is typically 12-15 degrees above the low limit setting. When the air circulated within the enclosure rises by this amount (about 90ºF), the compressor and condenser blower turn back on, reducing the cabinet internal air temperature once again. Therefore, it would be normal at start up for the internal temperature to rise to this 90ºF temperature before the cooling process would begin. As the air cools, a balance of temperature within the enclosure is reached. Ideally the compressor and condenser blower continue to run most

of the time until the heat load changes.

It is important to understand that enclosure cooling is not “comfort” cooling as found in homes and buildings. Heat producing power and control components are typically limited to maximum enclosure air temperatures of 100ºF to 110ºF. The actual component surface temperatures are higher. Maintaining enclosure temperatures at excessively low settings often becomes problematic. Condensation may form on live electrical surfaces if their temperature falls below the dew point of the air. Subsequent corrosion or electrical safety becomes a serious issue.

Air conditioners are required where the equipment operating temperature must be kept at or lower than the ambient room temperature, and/or the cabinet must be sealed from oil, dust, fumes and other contaminants.

Specially designed air conditioners protect the components and furnish the required cooling. Such air conditioners employ hermetic refrigeration systems with customized controls. They provide enclosure and air-path geometries for direct installation to the equipment cabinet and accomplish the following:

1. Isolate the interior of the equipment enclosure from ambient conditions
2. Cool the air within the enclosure to the optimum temperature for the sensitive components
3. Circulate the air within the enclosure to equalize temperature and increase heat transfer from hot components
4. Automatically vary cooling rate to maintain close control of equipment temperature
5. Reduce humidity harmful to sensitive components

Air conditioners that are used to cool enclosed equipment differ radically from room air conditioners. In the area of temperature control, for example, most electronic systems are adversely affected by large line transients typical of air conditioner compressor cycling. Electronics also exhibit sensitivity to electromagnetic interference caused by thermostat contacts. The control system of an air conditioning package must be designed accordingly.

In addition, the field experience of many compressor manufacturers has indicated that the frequent start/stop cycling, typical of standard air conditioner operation, shortens compressor reliability.

These factors have led to the development of techniques for close control of internal temperature over a wide range of ambient conditions, without turning the refrigeration compressor on and off and without employing electrically-controlled solenoid valves.

Recent developments in temperature requirements for enclosed components have led to the addition of adjustable Low Temperature Control thermostats in all KOOLTRONIC Air Conditioners to prevent over-cooling.

AIR CONDITIONERS (AIR-COOLED) Heat removed from the enclosure is discharged by circulating the ambient air through the condenser coil and returning the heated air to the ambient. This is the most common form of small air conditioning systems.

AIR CONDITIONERS (WATER-COOLED) Intended primarily for extreme operating conditions of high-ambient temperatures or severe contaminants, these units utilize water as the medium for heat dissipation. The heat is absorbed by cool water circulating through a coaxial condenser coil, following which the heat-laden water is discharged or recirculated after cooling.

AMBIENT The environment surrounding the product. The word Ambient is typically used to describe the temperature, humidity, air cleanliness or quality including dust and possibly any other harsh weather condition. (See Corrosive Atmosphere)

AMBIENT TEMPERATURE RANGE Most KOOLTRONIC Air Conditioners are designed to operate at ambient temperatures ranging from 50ºF to 131ºF. Optional Low Ambient Kits allow operation in ambient temperatures as low as 0ºF.

Maximum operating ambient temperature decreases linearly with altitude at the rate of 3ºF per 1,000 feet between 2,500 and 7,500 feet, where maximum operating ambient temperature is 110ºF. The ability to operate at high ambient temperatures permits KOOLTRONIC Air Conditioners to be installed indoors in close proximity to furnaces and other heat-producing equipment.

For applications in ambient temperatures higher than the rated maximum, consultation with the KOOLTRONIC Engineering Department often provides the solution.

AUTOMATIC EXPANSION VALVE (AEV) A refrigerant metering device that provides the same function as a capillary tube (See Capillary), but can provide a variable flow rate to match different load conditions. (See Temperature Control)

BLOWER or ***BLOWER WHEEL*** or ***SQUIRREL-CAGE BLOWER*** An air moving device typically used to move air against medium to high static pressure systems. Blowers are designed to operate against higher static pressures than fans. Packaged blowers provide compact, filtered, rack-mounted cooling in a variety of airflow configurations.

BLOWERS (VARIABLE SPEED) The optimum open-cycle system for use in contaminated environments combines the appropriate air filter and temperature alarm with a variable speed blower that adjusts its operating speed to provide the desired cabinet air temperature, as sensed at some point within the enclosure. Since blower air delivery is directly proportional to motor shaft speed, airflow rate can be adjusted to a minimum compatible with a clean air filter and low ambient temperature. Should ambient temperature increase or the filter clog with contaminants, the sensor and controls would demand an increase in motor speed until the new conditions were satisfied.

The variable speed blower is self-adaptive to changes in ambient temperature, air density, line voltage, power dissipation in the enclosure, and to the degree of filter-loading. Since the blower operates at the minimum speed and air delivery compatible with cooling, both power consumption and the rate of contaminant accumulation on filter surfaces is greatly reduced, compared to a constant speed blower designed to satisfy worst-case conditions. This increases filter life and reduces filter maintenance to a minimum. Conversely, as the filter loads, blower air delivery could increase to levels beyond those that would be obtained under constant speed conditions. However, cost must be considered.

BTU/H British Thermal Unit per Hour is a unit of measure for heat. Heat is also commonly measured in watts: (1 BTU/H = .29 watts)

CAPILLARY A copper tube with a very small inside diameter. Its function in the refrigerant system is to separate the High Pressure (condenser) side from the Low Pressure (evaporator) side, by providing a calibrated restriction and a resulting pressure drop.

CFM Cubic Feet per Minute - A unit of measure for air volume.

COIL An industry term for a device intended to transfer heat. The typical coil is constructed of aluminum fins and copper tubing.

COOLING (CLOSED-LOOP) An industry term used to describe a cooling process that reconditions (reuses) the air inside a chamber. The purpose of this system is to prevent contamination from entering the chamber. Closed-loop cooling is recommended only when open-loop cooling cannot be used.

Many applications using sophisticated electronic/electrical components require a closed-loop cooling system to dissipate heat buildup without introducing outside contaminated air. Closed-loop cooling is required when equipment is operated in hostile environments containing dirt, oil, humidity or corrosives, which adversely affect the performance or ultimate survival of the components. The presence of airborne particulate matter compounds the difficulty of controlling the temperature of the equipment in the enclosure.

Air conditioners and water to-air heat exchangers provide the greatest capacity to transfer heat in closed-loop conditions. They have the unique ability to maintain a lower than ambient temperature and reduce the humidity within the controlled space. It is important to note that enclosure design temperatures may exceed the ambient temperatures, yet be below the electronic components' design limits.

Where maximum internal cabinet design temperatures cannot be maintained using open-loop ambient air cooling, closed- loop devices need to be considered. Air to air heat exchangers, water to air heat exchangers and air conditioning units are able to cool a confined amount of air within an enclosure.

In harsh environments involving high temperatures, heavy particulates, oil, or chemicals capable of damaging components, ambient air must be kept out of the enclosure. Sealed enclosures are generally used, with closed-loop cooling consisting of two separate circulation systems in a single unit. One system, sealed against the ambient air, cools and recirculates the clean cool air throughout the enclosure. The second system uses ambient air or water to remove and discharge the heat.

COOLING (OPEN-LOOP) An industry term used to describe a cooling process that replaces the air inside a chamber with "fresh" cooler air from outside the chamber.

Open-loop cooling is the most commonly used process when the available air supply is cool enough and clean enough to provide the required heat removal. (See Cooling (Closed-Loop))

Open-loop ventilation uses ambient air to remove the heat, and may consist of small muffin type fans that exhaust or supply an electrical cabinet, with optional filters to prevent airborne aerosols and dust from entering the cabinet. The fans have the advantage of utilizing a minimum of cabinet space and will move a substantial volume of air where flow is virtually unimpeded. Cost and complexity is minimized. Where density of components impedes airflow, packaged blowers or motorized impellers may be arranged to operate against these higher static pressures. With a rack enclosure, supplemental fan trays may be used to spot cool or supplement other air-moving devices.

Where maximum internal cabinet design temperatures cannot be maintained using open-loop ambient air cooling, closed- loop devices need to be considered.

COMPRESSOR is the main component in a refrigerant system. Inside our compressors are a motor and a pump that circulates the refrigerant through the rest of the system.

CONDENSATION is the process in nature that causes water (condensate) to be removed from the air, and form on a cold surface. This is commonly seen on the outside of a glass of ice water, or dew on grass in the morning.

High ambient relative humidity does not affect the rated capacities of KOOLTRONIC Air Conditioners. They are designed for installation on reasonably tight enclosures of relatively limited internal volume.

Normally, only sensible heat loads are imposed on the Air Conditioner. Even at an ambient temperature of 95ºF and a relative humidity of 100%, the air within a typical electronic equipment enclosure 2.5 feet square and 6 feet high will contain only a small amount of water in vapor form. As the temperature of the air being circulated within the enclosure is reduced from 95ºF to 70ºF, the water will be condensed quickly in the evaporator heat exchanger and be disposed of through the drain in the condensate tray at the bottom of the Air Conditioner.

Unless the enclosure is totally sealed, some slow invasion of ambient air will take place through cracks and seams in the cabinetry and the front panels. However, even at ambient relative humidities of 100%, the infiltration rate is normally so small that the effect on cooling capacity of latent heat of water vapor condensation in the infiltrating air is negligible.

Cooling performance of the air conditioner is reduced if its capacity is used for the condensation of excessive moisture. This occurs if the enclosure is poorly sealed or is open for long periods, under high humidity conditions. A continuous flow of condensate denotes that these adverse conditions are present and should be remedied immediately.

CONDENSER The hot section of the refrigerant system that removes the waste heat away from the refrigerant system. This is commonly accomplished with either air or water to carry away the heat. This component is called a condenser, because the refrigerant inside is changing state from a gas to a liquid (condensing).

CORROSIVE ATMOSPHERES Corrosive environments, such as those found in chemical plants and in industries where processes result in harsh chemical by-products, usually preclude the use of filtered ambient air for forced convection cooling. Corrosives generally cannot be filtered out by normal filtration methods. Scrubbing techniques that must be used to rid air of corrosives are complex, costly and often not satisfactory.

For such applications, the cooling method requires isolation of the sensitive components subject to damage from the offending substances. The solution is usually closed-loop cooling - heat exchangers or air conditioners - which consists of two separate circulation systems in a single unit. One recirculates clean cooling air through the electronics within the sealed enclosure, while the other discharges the heat removed from the cabinet to the ambient air or into water for removal.

If the corrosive atmosphere is within an acceptable temperature range, air-to-air heat exchangers can be used to provide cooling for equipment enclosures. When both high ambient temperatures and corrosives are present, either air conditioners or water-to-air heat exchangers must be employed to cool the hot components.

Regardless of the cooling apparatus chosen, it must be constructed of appropriate corrosion-resistant materials, or be treated with corrosive-resistant coatings, to ensure long, trouble-free operation under the conditions to be encountered.

Care should be taken to review the particular conditions involved. In most cases, a system can be designed to meet specific requirements at moderate cost.

DEW POINT The surface temperature at which condensate (water) will form as related to the air temperature and air humidity. (See Condensation)

EVAPORATOR The section of a refrigerant system that operates colder than the ambient. This component is called an evaporator, because the refrigerant inside is changing state from a liquid to a gas (evaporating).

FAN or ***PROPELLER FAN*** An air moving device typically used to move high volumes of air against low static pressure systems. Fans occupy minimal cabinet space and will move a substantial volume of air where flow is virtually unimpeded. Packaged fans can be used for filtered panel or rack-mounted cooling in such applications.

FILTRATION Filtration of contaminated air can be accomplished in some installations to permit forced convection cooling of electronic equipment. Generally, contamination can be broken down into two major categories: airborne particulate matter and corrosives.

In most cases, particulate matter can be filtered out and the air made safe for the cooling of heat-producing equipment. However, removal of corrosives by filtration generally requires processes that are too costly and/or too restrictive to airflow. Therefore, isolation of the enclosure contents is usually necessary.

Careful consideration must be given to the type and severity of the conditions to be encountered. Filters must be able to protect the enclosure at the worst-case level of contamination anticipated. Once the system is installed, adequate preventive maintenance is crucial. Filters must be cleaned or replaced regularly, or means must be provided for continuous monitoring of the filter condition.

In order to prevent choking of airflow, it is important for the filter inlet opening to be at least as large as the total area of all air outlets. Inlet and outlet areas should be determined after allowance for impedance of grille materials or other barriers.

Air inlets and outlets should be as far apart as possible, so the air is forced to circulate through all heat-producing components. All air inlets should be filtered, whether the air enters through a fan or blower, or directly into the cabinet for exhausting, when pressurization is not feasible.

FILTERS (STANDARD) Filters used with typical electronic equipment cooling devices are usually the viscous-impingement type and are approximately 65% efficient. They utilize fibers that have been coated with a nondrying, tacky substance which traps particulates as air is drawn through. Usually constructed of aluminum foil or flock-coated pleated wire screen, the filters can be cleaned, recoated and re-used indefinitely. Often, filters of this type are used as pre-filters in multiple filter systems to extend the service life of high efficiency or absolute filters.

FILTERS (HIGH EFFICIENCY) High efficiency or absolute filters are available in efficiencies ranging up to 99.97% on 0.3 micron size particles. The filter media is a pleated paper which operates as a strainer, since its openings are physically smaller than the particulates it is designed to intercept. This type of filter offers relatively high resistance to airflow and is employed only where more common filter types are incapable of providing acceptable levels of protection. In applications where such filters are required, provision must be made for adequate airflow to overcome the higher resistance in addition to the cooling airflow needed. These are not offered in our standard products.

FLOW MONITORS Where higher levels of contamination exist or can develop rapidly, filtered cooling air packages should be equipped with some form of flow monitor. In the event of a reduction in air delivery below a minimum acceptable level due to a clogged filter, a flow-sensing or temperature-sensing device triggers warning alarms or shuts down effected equipment.

Pressure differential switches, which respond to pressure drops across an air filter, are often employed, as are simple vane-type airflow velocity sensors or thermostatic over-temperature detectors located at equipment hot spots. At times, flow-sensing and temperature-sensing devices are employed in combination. In this way, relatively low airflows are accepted when the ambient temperature is low.

At higher ambient temperatures, reduced airflow, resulting in excessive component temperature, activates the warning device or shuts off power. This arrangement permits maximum filter utilization and safety to the equipment.

The need for flow monitoring should be evaluated carefully because of the added cost of the various devices required.

FORCED CONVECTION COOLING or ***OPEN-LOOP AMBIENT AIR COOLING*** An industry term that describes an air system used to cool a chamber with just the available air surrounding the product.

FORCED VENTILATION vs. CLOSED-LOOP COOLING If ambient air is cool and clean enough, use it. If the ambient is too hot, dirty or corrosive, a closed-loop system is needed. A heat exchanger is usually a lower-cost choice than an air conditioner. See if it will do the job. Don't over-cool. Don't oversize the cooling equipment.

HEAT EXCHANGERS Heat exchangers are recommended to cool equipment which can tolerate operating temperatures moderately higher than ambient, while air conditioners are required where equipment temperatures must be maintained below ambient.

In applications where airborne contaminants pose a threat to electronic components, the enclosure interior must be isolated from the external environment. For such applications, a sealed enclosure, with a heat exchanger or an air conditioner is required.

For installations that can operate at above-ambient temperatures, heat exchangers provide moderate-cost closed-loop cooling. Available in both air-to-air and water-to-air versions, there are models covering a wide range of cabinet sizes and performance capacities. Depending upon the model selected and the heat load, near-ambient to moderately-above-ambient temperatures can be achieved.

For applications that can utilize heat exchangers, the advantages compared with air conditioners include:

- Lower initial cost
- Lower power consumption
- Simpler construction
- Fewer operating components
- Lighter weight

FIGURE 1

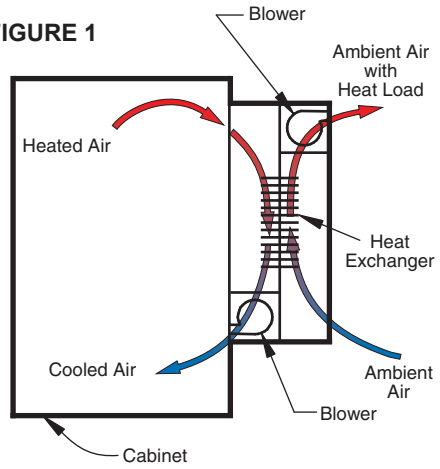

In an air-to-air heat exchanger, heat from air surrounding the components is removed by a specially designed heat transfer element before being routed back into the enclosure.

HEAT EXCHANGERS (AIR-TO-AIR) Advanced air-to-air heat exchanger designs for cooling enclosures include two types of heat transfer methods. One design consists of a finned-tube coil which contains liquid refrigerant. The warm air exhausted from the equipment cabinet to the heat exchanger is directed past the coil, causing the refrigerant to boil and absorb heat. The resultant refrigerant vapor rises to the upper portion of the tubes, where the heat is removed by the cooler ambient air and the refrigerant condenses back to liquid, completing the cooling cycle in a continuous process.

The most recent developments in enclosure Heat Exchanger design employ high-efficiency heat transfer elements fabricated of embossed convoluted metal foil or thin-film polymer material, constructed into two totally separate air paths. The air leaving the hot enclosure is directed through one side of the exchanger, where the heat passes through the element walls into the ambient-side air stream and is dissipated.

Figure 1 illustrates heat transfer in air-to-air Heat Exchanger applications.

HEAT EXCHANGERS (WATER-TO-AIR) If ambient air cannot be utilized directly as a cooling medium, another cost-effective method of cooling is a water-to-air system (**Figure 2**). Water is used to remove heat from air circulated within the electrical enclosure.

Cooling water is circulated through a finned-tube coil, which is installed in a compartment isolated from the enclosure to protect the contents from possible leakage of water. As the heat-laden air circulates through the coil, the heat is absorbed by the water and carried away, in a continuous process.

Water-to-air systems are easy to install and usually require minimum maintenance. The water used must be reasonably clean and cold enough to ensure proper operation of the cooling system under the most severe anticipated conditions.In cases where sufficiently cold water is available, below ambient-temperature cooling can be achieved..

FIGURE 2

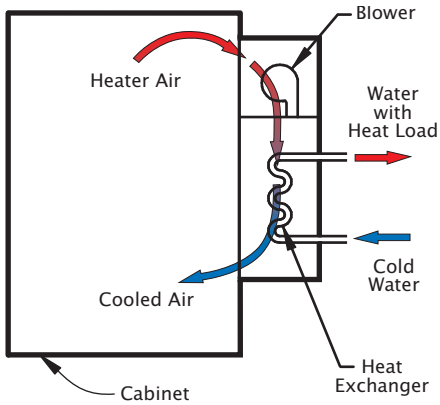

A water-to-air heat exchanger works by transferring heat of internal air to circulating water, resulting in cooled air which is recirculated throughout the equipment enclosure.

HEAT LOAD TRANSFER The amount of heat that is conducted through the exposed area of the enclosure from the warmer to the cooler space. Heat load transfer can be a heat gain, or a heat loss to the cabinet, depending on the conditions.

If the air outside the cabinet is warmer than the air inside the cabinet, the heat is moving through the cabinet and increasing the total heat load - this will require a larger capacity air conditioner.

If the air outside the cabinet is cooler than the air inside the cabinet, the heat is moving through the cabinet and decreasing the total heat load - this will require a smaller capacity air conditioner.

HOT GAS BYPASS VALVE A refrigerant metering device that allows some of the hot compressor discharge gas to flow into the evaporator. Its function is to prevent the coil from freezing during low load conditions and provide uninterrupted cooling. (See Temperature Control)

HUMIDITY See Relative Humidity

INTERNAL HEAT LOAD The heat generated by the components inside the cabinet.

INSULATED ENCLOSURES Insulated enclosures are recommended for outdoor applications, to minimize the additional heat load caused be the sun's rays. It is best to consult your insulation supplier to select the correct material with the right thermal, flame and electrical ratings for your application. In general, a thin layer (about ½ inch) of foam insulation, with the proper flame rating, is sufficient for most applications. (See Non-Metallic Enclosures)

LATENT HEAT The energy in air that is reduced when water is removed in the form of condensation. (see Sensible Heat)

NEMA National Electrical Manufacturers Association - Your equipment may require a NEMA rating to comply with local codes. See page 9 for chart of NEMA Enclosure Ratings. Air conditioners typically carry an agency marking such as UL (Underwriters Laboratories), which designates the environmental hazard from which the contents are being protected. This marking should be matched to the enclosure to be cooled. Typical examples include NEMA 12 (indoor use, protection from dust and dripping liquids), NEMA 3R (indoor or outdoor use and rain proof), NEMA 4 (indoor or outdoor use, protection from wash-down) and NEMA 4X (indoor or outdoor use, protection from corrosive environments). Depending upon the NEMA enclosure type, an air conditioner can be provided to operate in most locations. Locations subject to dust, dripping liquids, rain, washdown and corrosive atmospheres can utilize these "Special Purpose Air Conditioners."

NON-METALLIC ENCLOSURES Although plastics have better insulating properties than metal, a layer of insulation is still recommended for outdoor applications. (See Insulated Enclosures)

RADIO FREQUENCY INTERFERENCE (RFI) "Noise" that is accidentally generated by electrical products that interferes with the normal transmission and reception of radios and other equipment that uses radio waves.

RELATIVE HUMIDITY A unit of measure to describe the amount of water (moisture) in air. It is described in percent, i.e. %RH - over 80%RH is very humid, and below 30% is very dry. (See Condensation)

SENSIBLE HEAT The thermal energy in air that is measured by a change in temperature. (See Latent Heat)

SOLAR LOAD or ***SUN LOAD*** The heat from the sun must be considered when identifying the total heat load on a system. This solar load can be minimized if the equipment cabinet is shielded from the direct rays of the sun. If this is not possible, painting the cabinet a light color and adding insulation should be considered. If none of these alternatives are possible, the capacity must be increased to address this additional heat load. In the southern USA, this affect can be significant. In the northern USA, this affect might be negligible.

STATIC PRESSURE A method used to quantify the air pressure created by a fan or blower wheel. Low static pressure exists at the outlet of a fan that is blowing into an open air space. High static pressure is created when the same fan is blowing into a restrictive, closed compartment. High static pressure is an indication of low airflow, and possibly poor cooling. If the components in a product are inherently very congested, the air flow through them will be restricted and create high static pressure. This condition can be overcome with an alternate blower wheel housing design. Typically a larger motor is needed to overcome this condition.

TEMPERATURE CONTROL Typical refrigeration and air conditioning systems control temperature by on/off compressor cycling as air temperatures fluctuate between minimum and maximum thermostat settings. Compressor start-up often introduces substantial transient noise into the circuit powering the equipment to be cooled. Thermostat or relay operation results in electromagnetic interference. Both of these factors can adversely affect the function of electronic equipment. On/off compressor control necessitates choosing between large temperature excursions or frequent compressor cycling.

Furthermore, frequent start/stop operation exposes internal compressor components to electrical and mechanical strains not encountered during continuous operation. The use of electrical controls to handle high compressor start-currents results in eventual erosion of the control contacts themselves.

In order to eliminate the possibility of these problems, KOOLTRONIC Air Conditioners feature a continuously operating compressor and non-electric proportional control system, which result in more stable equipment temperatures and prolonged life for the compressor and the control system. Both blowers and the compressor start simultaneously with the application of power to the unit, and continue to operate until power is removed at the time of equipment shutdown.

The Hot Gas Bypass Control Valve permits refrigerant to be injected into the evaporator coil. This high-temperature gas presents an artificial heat load and permits the effective cooling rate to be varied as necessary to maintain a constant return air temperature back to the enclosure. This control also prevents evaporator freeze-ups during periods of low heat load or low ambient temperature.

Although the above control system works effectively at most times, there are instances of over-cooling due to low heat load or low ambient temperature. In order to prevent that condition, KOOLTRONIC Air Conditioners are supplied with either a Low Temperature Control Thermostat or Digital Controller.

When activated, the Low Temperature Control shuts off the compressor and condenser (ambient side) blowers. The evaporator (enclosure side) blowers continue to circulate the air through the enclosure and air conditioner. When the air temperature again reaches the level at which cooling is needed, the compressor and condenser blowers resume operation.

UNDERWRITERS LABORATORIES, INC. (UL) The leading third party product safety organization in the United States, the largest in North America and the leading quality system registrar headquartered in the United States. Providing product safety verification services for more than a century, the UL Mark is one of the world's most familiar safety certification symbols. The Canadian Standards Association (CSA) provides similar service in Canada. Recently UL and CSA have been working cooperatively and have adopted joint procedures, standards and marks.

VAPOR COMPRESSION REFRIGERATION CYCLE (See Air Conditioner)

WATT A unit of measure for electrical power. Watts are also used to quantify the amount of heat in a system, because 1 watt will convert to 3.413 BTU's.



AIR CONDITIONERS

The KOOLTRONIC lines of air conditioners offer the most extensive selection of cooling capacities, sizes, mounting configurations and power inputs available. Capacities range from ***1,000 to 30,000 BTU/H*** in vertical panel-mounted, horizontal internal rack-mounted, external top-mount and internal/externally mounted models. Both air-cooled and water-cooled types are available. Most models use centrifugal blower-driven air systems for maximum penetration. All are engineered for full-capacity performance at high ambient temperatures.

KOOLTRONIC **closed-loop** air conditioners cool, dehumidify, and recirculate clean air within the electrical enclosure through the heat producing components, providing protection from high temperatures, humidity and airborne contaminants. The ***Guardian/GuardianX***, ***SlimKool*** and ***Hazardous Location*** Air Conditioner product lines have been designed for both indoor or outdoor use without the need for weather shielding. The ***Guardian/GuardianX Series*** offers models of different sizes and BTU/H outputs to choose from, as well as ***NEMA 4*** or ***4X Ratings*** and a variety of voltages, including ***480 Volt.*** The ***SlimKool Series*** Air Conditioners, which can be mounted on the exterior of shallow electrical enclosures, consists of compact models with a standard width of 11.75 inches and a standard depth of 15.1 inches, and offers 115, 230 or ***480 Volt*** models. The ***Hazardous Location Series*** Air Conditioners offer robust engineering and industrial-grade construction, providing the durability and safety required by hazardous location applications. The ***Hazardous Location Series*** offers 115, 230 and ***480 Volt*** units.

KOOLTRONIC Air Conditioners feature a ***Hot Gas Bypass Valve*** or other evaporator temperature controls to limit the potential for over-cooling of critical components and avoid frequent cycling of the compressor, promoting long and reliable operation. A low limit temperature control also is provided to cycle off the compressor. Many KOOLTRONIC models are available with a ***Progammable Temperature Alarm*** to alert if early action is required, and a ***Programmable Thermostat***, allowing more accurate and versatile performance features.

KOOLTRONIC Air Conditioners are engineered for reliable performance. All applicable components are UL/CSA Recognized. ***Most models are UL/CUL Listed or Recognized and maintain NEMA 12 Enclosure Rating (UL50).***

Most KOOLTRONIC Air Conditioners are designed for normal indoor installation. Outdoor or corrosive environments require weather protection and/or special internal and external protective features. For hosedown or outdoor applications, the ***Guardian*** or ***SlimKool*** *air conditioners are available. For protection against corrosive atmospheres, KOOLTRONIC offers the* ***GuardianX*** or ***SlimKool NEMA 4X Air Conditioners.***

KOOLTRONIC also designs and manufactures a variety of air conditioners to meet unique specifications. We invite your inquiries about our quick-response modification and custom-design capabilities.

GENERAL SPECIFICATIONS FOR ALL STANDARD AIR CONDITIONERS

CLOSED-LOOP COOLING: The enclosure interior airflow system is isolated from the ambient airflow or waterflow system. No ambient air can invade the cool, dehumidified sensitive component compartment.

BALL-BEARING MOTORS: All blower motors are UL/CSA Recognized and include automatic-reset thermal overload protection and double-sealed or double-shielded precision ball bearings. Special permanent lubricants perform over a broad temperature range: -20ºF (-29ºC) to 250ºF (121ºC). Tube axial fans are rated to perform at 14ºF (-10ºC) to 158ºF (70ºC) and are designed to meet UL, CSA and VDE.

BLOWERS: All centrifugal blowers are KOOLTRONIC-designed and built to provide optimum airflow and pressure for each air conditioner design.

RUGGED CONSTRUCTION: Precision-engineered heavy gauge steel construction of all shells and blowers insures air conditioners will stand up under tough applications.*

BAKED POWDER FINISH: Durable, baked-on powder finish is standard. Other finishes are available.*

POWER: Units are available in 115 VAC, 230 VAC or 480 Volt.

REFRIGERANTS: CFC-free R134a Refrigerant is used in all air conditioners for which compatible compressors are available. All others contain Zero Ozone Depleting Potential (ODP) R410a Refrigerant. The model number reflects the refrigerant. A 4 between the A and C signifies R134a; a 6 signifies R410a. Consult KOOLTRONIC for status at time of requirement.

FILTERS: Multi-layer grid of sturdy, corrugated aluminum in an aluminum frame. May be reused after washing off accumulations and spraying with KOOLTRONIC A-16 Recoating Adhesive. Filters must be kept free of accumulations to prevent reduction or loss of performance and/or damage to equipment. Filters are not required on water-cooled models.

CONDENSATE DISPOSAL: Condensate drain fitting and hose are included. Built-in Condensate Evaporators are standard on ***TrimLine*** and various other Series. (See Series sections)

POWER CORD: All models have 3-wire power cords. 480 Volt models are supplied with an external junction box for permanent wiring as a Standard Feature. Single phase UL listed units are supplied with a plug.

INSULATION: All cold components, lines and the evaporator compartment are insulated with high-performance insulation for maximum efficiency.

GASKETING: All units are fully gasketed for tight, leakproof installation in compliance with the NEMA 12, 3R or 4/4X Enclosure Ratings.

QUALITY ASSURANCE: Refrigeration system components are kept sealed until charged with refrigerant; all brazed joints are thoroughly leak-tested; each unit is functionally tested before shipment.

INSTALLATION: Online Installation Instructions with mounting plans are available on the Kooltronic website: www.kooltronic.com.

* See ***Guardian/GuardianX, Guardian/GuardianX 480 Volt, Integrity NEMA 4/4X, Intrepid*** and ***Profile*** for different specifications applicable.

GUARDIAN/GUARDIANX
NEMA 4 OR 4X AIR CONDITIONERS



NEMA
TYPE 4 OR 4X
MAINTAINED

Many popular units are available as 3D solid models for customer system integration. Please contact Kooltronic for details.

DESCRIPTION

The ***Guardian*** and ***GuardianX*** indoor/outdoor Air Conditioners are designed specifically for **NEMA 4** or **4X** enclosure applications that require washdown or are subject to outdoor storm conditions. All ***Guardian*** models have a **NEMA 4** Rating. The ***GuardianX***, with a **NEMA 4X** Rating, is offered with a Stainless Steel Shell and Internal Corrosion Protection.

With Epoxy-coated coils and tubing, the closed-loop cooling system of the ***Guardian Series*** offers added security by providing an operating environment safe from harsh ambient conditions.

The ***Guardian Series*** consists of units with heights from 15 to 60 inches, offering from 1,000 to 26,000 BTU/H ratings. In addition to the list of standard features, these ***Guardian Series*** Air Conditioners are also available with a wide range of accessories and options, including remote monitoring and enclosure heaters.

The features engineered into the ***Guardian/GuardianX Series*** make them a tamper-resistant choice for external applications. With all models UL/CUL Listed, the ***Guardian Series*** is an excellent choice for telecommunications, wastewater treatment, food and beverage and other challenging applications.

General specifications common to all KOOLTRONIC Air Conditioners are on the first page of this section.

The ***Guardian/GuardianX Series*** also offers 480 Volt models (page 36).

KOOLTRONIC also designs and manufactures a variety of air conditioners to meet *unique* specifications. We invite your inquiries about our modification and custom-design capabilities.

CALL 1-800-321-KOOL (5665)
or FAX 609-466-1114

STANDARD FEATURES

- All models UL/CUL Listed
- Baked Powder Finish (NEMA 4 models)
- Built-in Condensate Evaporator
- Closed-Loop Cooling
- Condenser Blower Speed Controller
- Epoxy-Coated Condenser and Evaporator Coils
- Heavy-duty Steel Shell (NEMA 4 models)
- Internal Corrosion Protection (NEMA 4X models)
- NEMA 12, 3R and 4 or 4X Ratings Maintained (UL50)
- Programmable Temperature Alarm
- Programmable Thermostat
- Six foot [1.8m] (minimum) 3-wire power cord
- Stainless Steel Shell (NEMA 4X models)
- Zero ODP or CFC-Free Refrigerant

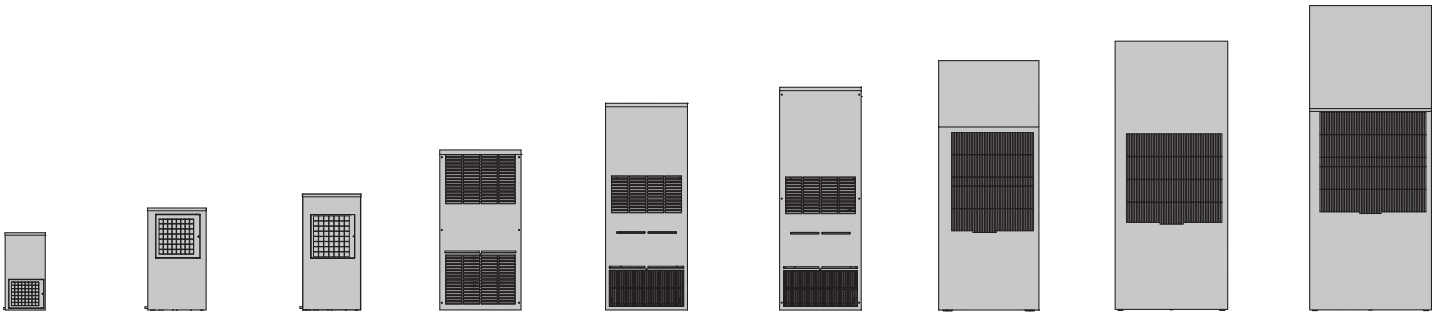

DP15	DP21	DP24	DP33	DP43	DP47	DP50	DP53	DP60
1,000 BTU/H	3,000 BTU/H	3,000 BTU/H	5,000 BTU/H	7,000 BTU/H	9,000 BTU/H	14,000 BTU/H	18,000 BTU/H	26,000 BTU/H
15"H x 8"W x 7"D	21"H x 12"W x 10"D	24"H x 12"W x 10"D	33"H x 17"W x 11"D	43"H x 17"W x 9"D	47"H x 17"W x 9"D	50"H x 20"W x 12"D	53"H x 22"W x 13"D	60"H x 24"W x 13"D

DP15 GUARDIAN/GUARDIANX
NEMA 4 OR 4X AIR CONDITIONERS

Model	NEMA Rating	UL/CUL Listed or Recognized	BTU/H Rating	95/95 Rating	Ambient Temp. ºF Max./Min.	Volts	* Hz	** Running Amps	Approx. Weight lbs	kg
KNA4C1DP15L	4	Listed	1160	950	131/-20	115/100	60/50	4.3/4.3	26	12
KNA4C1DP15LV	4X	Listed	1160	950	131/-20	115/100	60/50	4.3/4.3	26	12

* 115V 60 Hz models perform at reduced capacity when operated at 100V 50 Hz.
** Rating shown is for operation at maximum ambient temperature.

STANDARD FEATURES

- Baked Powder Finish (NEMA 4 models)
- Built-in Condensate Evaporator
- CFC-Free Refrigerant
- Closed-Loop Cooling
- Compressor Short Cycle Protector
- Epoxy-Coated Condenser and Evaporator Coils
- Filter
- Heavy-duty Steel Shell (NEMA 4 models)
- Internal Corrosion Protection (NEMA 4X models)
- NEMA 12, 3R and 4 or 4X Ratings Maintained (UL50)
- Programmable Temperature Alarm
- Programmable Thermostat
- Six-Foot [1.8m] (minimum) 3-Wire Power Cord
- Stainless Steel Shell (NEMA 4X models)
- UL/CUL Listed

ACCESSORIES AND OPTIONS

	Page
Adapter	86
Enclosure Heater	86
Filter Recoating Adhesive	86
Remote Monitoring	86
Remote Thermostat Relay	86
Replacement Filters	88
Special materials or finishes	✦
Special motors, line cords or connectors	✦



c UL us NEMA TYPE 4 OR 4X MAINTAINED

① FILTERED CONDENSER AIR INLET (Ambient Air In)
② CONDENSER OUTLET (Warm Ambient Air Out)
③ WARM AIR RETURN FROM ENCLOSURE
④ COOL AIR OUTLET TO ENCLOSURE

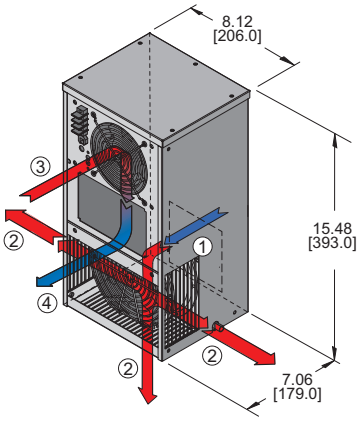

PERFORMANCE CHART

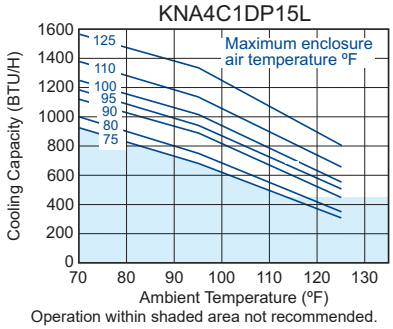

Operation within shaded area not recommended.

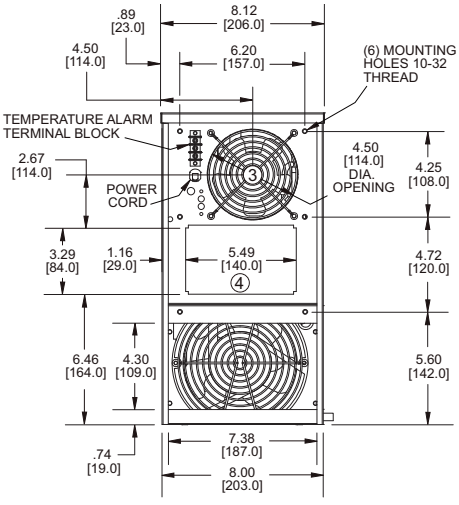

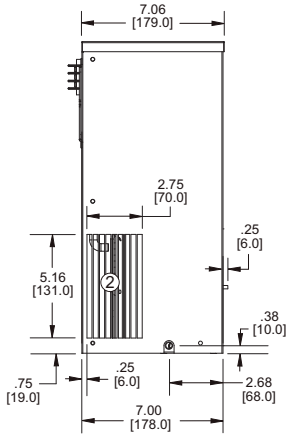

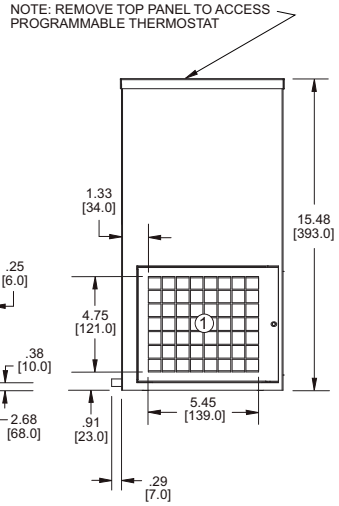

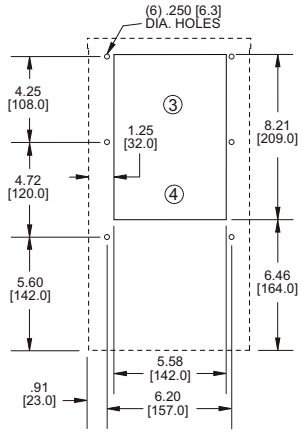

MOUNTING PLAN

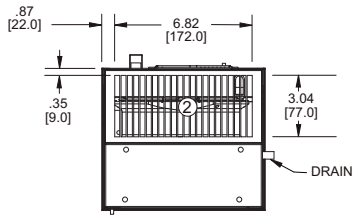

Many popular units are available as 3D solid models for customer system integration. Please contact Kooltronic for details.

Dimensions, inches [mm], are for reference only and subject to change.

✦ Contact KOOLTRONIC for information.

DP21 GUARDIAN/GUARDIANX
NEMA 4 OR 4X AIR CONDITIONERS

Model	NEMA Rating	UL/CUL Listed or Recognized	BTU/H Rating	95/95 Rating	Ambient Temp. ºF Max./Min.	Volts	* Hz	** Running Amps	Approx. Weight lbs	kg
KNA4C3DP21L	4	Listed	3000	2470	131/-20	115/100	60/50	6.0/5.0	54	25
KNA4C3DP21LV	4X	Listed	3000	2470	131/-20	115/100	60/50	6.0/5.0	54	25

* 115V 60 Hz models perform at reduced capacity when operated at 100V 50 Hz.
** Rating shown is for operation at maximum ambient temperature.



c UL us

NEMA
TYPE 4 OR 4X MAINTAINED

STANDARD FEATURES

- Baked Powder Finish (NEMA 4 models)
- Built-in Condensate Evaporator
- CFC-Free Refrigerant
- Closed-Loop Cooling
- Compressor Short Cycle Protector
- Condenser Blower Controller
- Epoxy-Coated Condenser and Evaporator Coils
- Filter
- Heavy-duty Steel Shell (NEMA 4 models)
- Internal Corrosion Protection (NEMA 4X models)
- NEMA 12, 3R and 4 or 4X Ratings Maintained (UL50)
- Programmable Temperature Alarm
- Programmable Thermostat
- Six-Foot [1.8m] (minimum) 3-Wire Power Cord
- Stainless Steel Shell (NEMA 4X models)
- UL/CUL Listed

ACCESSORIES AND OPTIONS

	Page
Adapter	84
Enclosure Heater	84
Filter Recoating Adhesive	84
Remote Monitoring	84
Remote Thermostat Relay	84
Replacement Filters	86
Special materials or finishes	✦
Special motors, line cords or connectors	✦

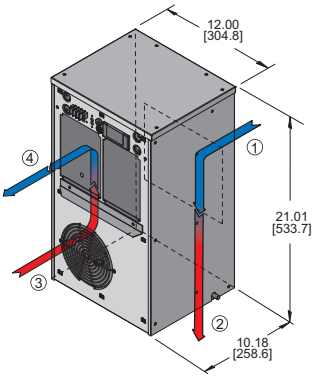

① FILTERED CONDENSER AIR INLET (Ambient Air In)
② CONDENSER OUTLET (Warm Ambient Air Out)
③ WARM AIR RETURN FROM ENCLOSURE
④ COOL AIR OUTLET TO ENCLOSURE

PERFORMANCE CHART

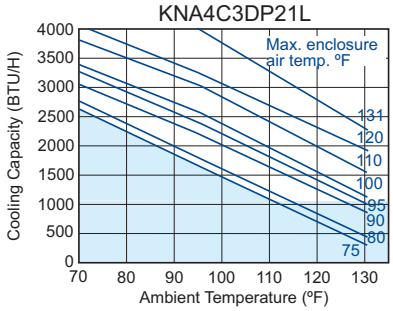

Operation within shaded area not recommended.

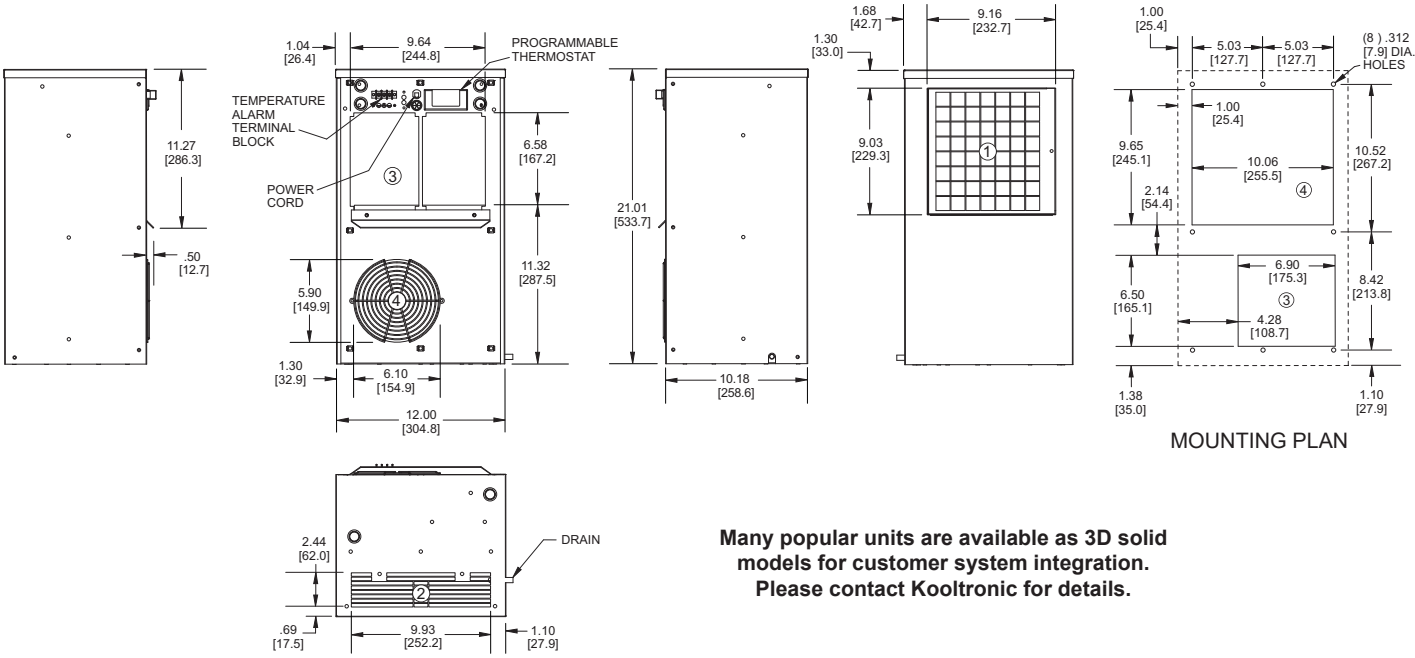

MOUNTING PLAN

Many popular units are available as 3D solid models for customer system integration. Please contact Kooltronic for details.

Dimensions, inches [mm], are for reference only and subject to change.

✦ Contact KOOLTRONIC for information.

DP24 GUARDIAN/GUARDIANX
NEMA 4 OR 4X AIR CONDITIONERS

Model	NEMA Rating	UL/CUL Listed or Recognized	BTU/H Rating	95/95 Rating	Ambient Temp. ºF Max./Min.	Volts	Hz	* Running Amps	Starting Amps (LRA)	Airflow @60 HZ Evap./Cond.	Fuse Size (Amps)	dBA @ 5 ft.	Approx. Weight lbs	kg
K2NA4C3DP24L	4	Listed	3000	2500	125/-20	208/230	60	3.0	4	171/173	15	69.2	61	28
K2NA4C3DP24LV	4X	Listed	3000	2500	125/-20	208/230	60	3.0	4	171/173	15	69.2	61	28
K2NA4C3DP24L	4	Listed	3000	2500	120/-20	200	50	3.0	4	171/173	15	69.2	61	28
K2NA4C3DP24LV	4X	Listed	3000	2500	120/-20	200	50	3.0	4	171/173	15	69.2	61	28

* Rating shown is for operation at maximum ambient temperature.

STANDARD FEATURES

- 208/230/200 Volt
- Baked Powder Finish (NEMA 4 models)
- Built-in Condensate Evaporator
- CFC-Free Refrigerant
- Closed-Loop Cooling
- Compressor Short Cycle Protector
- Condenser Blower Controller
- Epoxy-Coated Condenser and Evaporator Coils
- Filter
- Heavy-duty Steel Shell (NEMA 4 models)
- Internal Corrosion Protection (NEMA 4X models)
- NEMA 12, 3R and 4 or 4X Ratings Maintained (UL50)
- Programmable Temperature Alarm
- Programmable Thermostat
- Six-Foot [1.8m] (minimum) 3-Wire Power Cord
- Stainless Steel Shell (NEMA 4X models)
- UL/CUL Listed

ACCESSORIES AND OPTIONS

	Page
Adapter	86
Enclosure Heater	86
Filter Recoating Adhesive	86
Remote Monitoring	86
Remote Thermostat Relay	86
Replacement Filters	88
Special materials or finishes	✦
Special motors line cords, or connectors	✦



NEMA TYPE 4 OR 4X MAINTAINED

Many popular units are available as 3D solid models for customer system integration. Please contact Kooltronic for details.

PERFORMANCE CHART

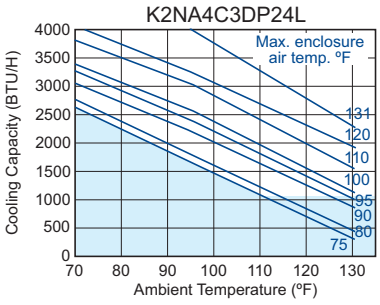

Operation within shaded area not recommended.

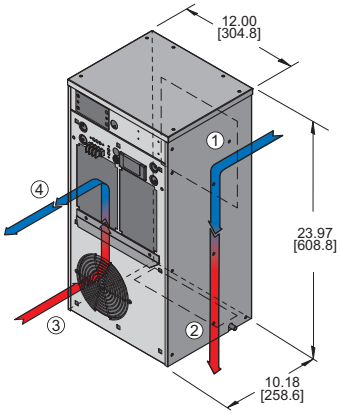

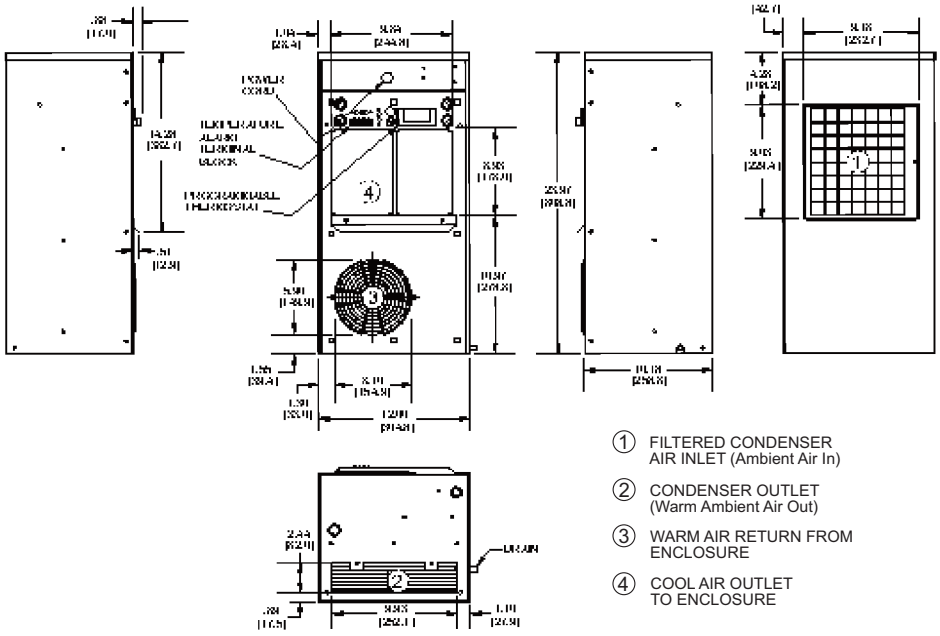

① FILTERED CONDENSER AIR INLET (Ambient Air In)

② CONDENSER OUTLET (Warm Ambient Air Out)

③ WARM AIR RETURN FROM ENCLOSURE

④ COOL AIR OUTLET TO ENCLOSURE

MOUNTING PLAN

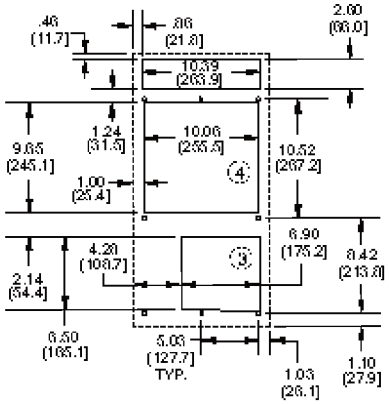

Dimensions, inches [mm], are for reference only and subject to change.

✦ Contact KOOLTRONIC for information.

DP33 GUARDIAN/GUARDIANX
NEMA 4 OR 4X AIR CONDITIONERS

Model	NEMA Rating	UL/CUL Listed or Recognized	BTU/H Rating	95/95 Rating	Ambient Temp. ºF Max./Min.	Volts	* Hz	** Running Amps	Approx. Weight lbs	kg
KNA4C5DP33L	4	Listed	5000	4000	131/-20	115/100	60/50	10.6/10.2	95	44
K2NA4C5DP33L	4	Listed	5000	4000	131/-20	230/200	60/50	4.5	95	44
KNA4C5DP33LV	4X	Listed	5000	4000	131/-20	115/100	60/50	10.6/10.2	95	44
K2NA4C5DP33LV	4X	Listed	5000	4000	131/-20	230/200	60/50	4.5	95	44

* 115V 60 Hz models perform at reduced capacity when operated at 100V 50 Hz.
** Rating shown is for operation at maximum ambient temperature.



c UL us

NEMA
TYPE 4 OR 4X MAINTAINED

STANDARD FEATURES

- Baked Powder Finish (NEMA 4 models)
- Built-in Condensate Evaporator
- CFC-Free Refrigerant
- Closed-Loop Cooling
- Compressor Short Cycle Protector
- Condenser Impeller Speed Controller
- Epoxy-Coated Condenser and Evaporator Coils
- Filter
- Heavy-duty Steel Shell (NEMA 4 models)
- Internal Corrosion Protection (NEMA 4X models)
- NEMA 12, 3R and 4 or 4X Ratings Maintained (UL50)
- Programmable Temperature Alarm
- Programmable Thermostat
- Six-Foot [1.8m] (minimum) 3-Wire Power Cord
- Stainless Steel Shell (NEMA 4X models)
- UL/CUL Listed

ACCESSORIES AND OPTIONS

	Page
Adapter	86
Enclosure Heater	86
Filter Recoating Adhesive	86
Remote Monitoring	86
Remote Thermostat Relay	86
Replacement Filters	88
Special materials or finishes	✦
Special motors line cords, or connectors	✦

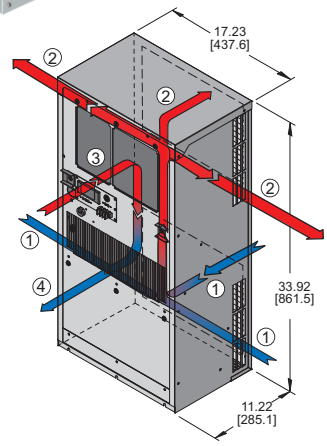

Many popular units are available as 3D solid models for customer system integration. Please contact Kooltronic for details.

PERFORMANCE CHART
K_NA4C5DP33L

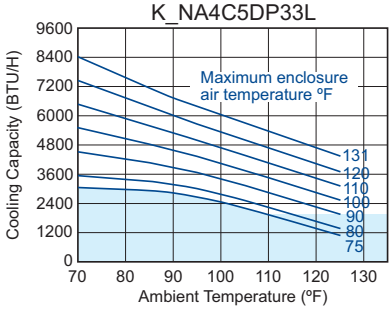

Operation within shaded area not recommended.

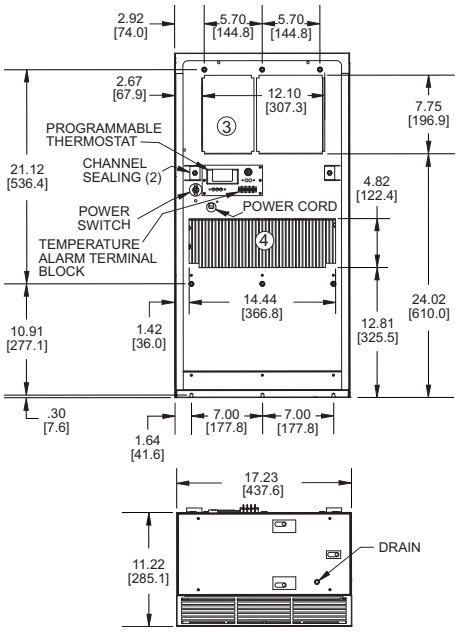

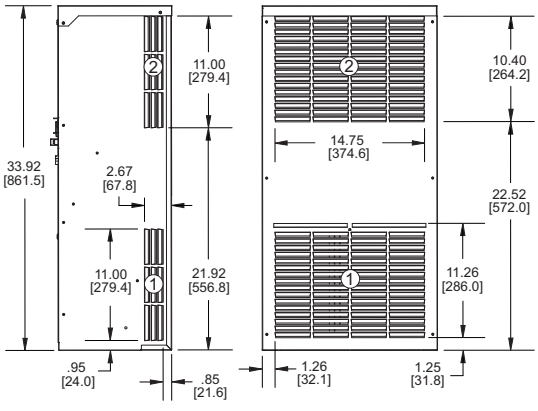

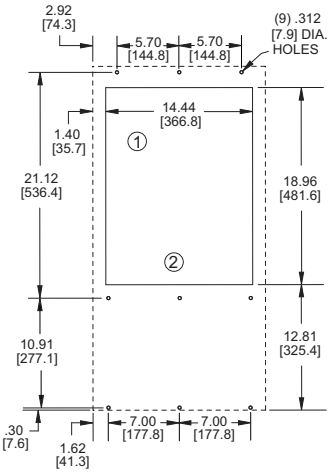

MOUNTING PLAN

① FILTERED CONDENSER AIR INLET (Ambient Air In)
② CONDENSER OUTLET (Warm Ambient Air Out)
③ WARM AIR RETURN FROM ENCLOSURE
④ COOL AIR OUTLET TO ENCLOSURE

Dimensions, inches [mm], are for reference only and subject to change.

✦ Contact KOOLTRONIC for information.

DP43 GUARDIAN/GUARDIANX
NEMA 4 OR 4X AIR CONDITIONERS

Model	NEMA Rating	UL/CUL Listed or Recognized	BTU/H Rating	95/95 Rating	Ambient Temp. ºF Max./Min.	Volts	* Hz	** Running Amps	Approx. Weight lbs	kg
KNA4C7DP43L	4	Listed	7000	5500	131/-20	115/100	60/50	13.8/13.6	125	57
K2NA4C7DP43L	4	Listed	7000	5500	131/-20	230/200	60/50	6.7/6.6	125	57
KNA4C7DP43LV	4X	Listed	7000	5500	131/-20	115/100	60/50	13.8/13.6	125	57
K2NA4C7DP43LV	4X	Listed	7000	5500	131/-20	230/200	60/50	6.7/6.6	125	57

* 115V 60 Hz models perform at reduced capacity when operated at 100V 50 Hz.
** Rating shown is for operation at maximum ambient temperature.



STANDARD FEATURES

- Baked Powder Finish (NEMA 4 models)
- Built-in Condensate Evaporator
- CFC-Free Refrigerant
- Closed-Loop Cooling
- Compressor Short Cycle Protector
- Condenser Impeller Speed Controller
- Epoxy-Coated Condenser and Evaporator Coils
- Filter
- Heavy-duty Steel Shell (NEMA 4 models)
- Internal Corrosion Protection (NEMA 4X models)
- NEMA 12, 3R and 4 or 4X Ratings Maintained (UL50)
- Programmable Temperature Alarm
- Programmable Thermostat
- Six-Foot [1.8m] (minimum) 3-Wire Power Cord
- Stainless Steel Shell (NEMA 4X models)
- UL/CUL Listed

ACCESSORIES AND OPTIONS

	Page
Adapter	86
Enclosure Heater	86
Filter Recoating Adhesive	86
Remote Monitoring	86
Remote Thermostat Relay	86
Replacement Filters	88
Special materials or finishes	✦
Special motors, line cords, or connectors	✦

c UL us
NEMA TYPE 4 OR 4X MAINTAINED

① FILTERED CONDENSER AIR INLET (Ambient Air In)
② CONDENSER OUTLET (Warm Ambient Air Out)
③ WARM AIR RETURN FROM ENCLOSURE
④ COOL AIR OUTLET TO ENCLOSURE

PERFORMANCE CHART

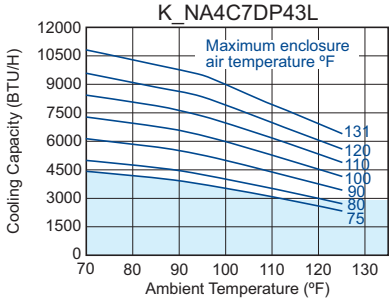

Operation within shaded area not recommended.

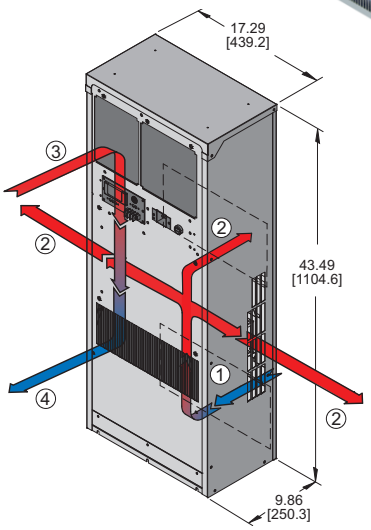

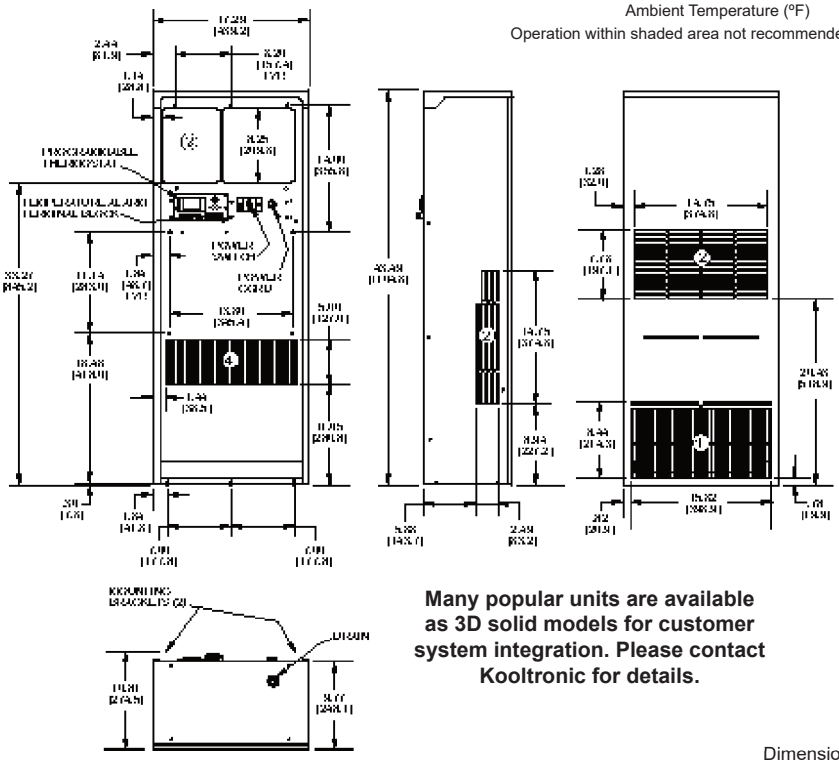

Many popular units are available as 3D solid models for customer system integration. Please contact Kooltronic for details.

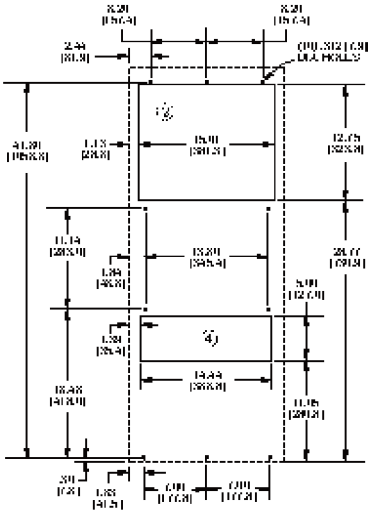

MOUNTING PLAN

Dimensions, inches [mm], are for reference only and subject to change.

✦ Contact KOOLTRONIC for information.

DP47 GUARDIAN/GUARDIANX
NEMA 4 OR 4X AIR CONDITIONERS

Model	NEMA Rating	UL/CUL Listed or Recognized	BTU/H Rating	95/95 Rating	Ambient Temp. ºF Max./Min.	Volts	Hz	* Running Amps	** Approx. Weight lbs	kg
KNA4C9DP47L	4	Listed	9000	7400	131/-20	115/100	60/50	19.2/19.2	135	62
K2NA4C9DP47L	4	Listed	9000	7400	131/-20	230/200	60/50	9.0/9.0	135	62
KNA4C9DP47LV	4X	Listed	9000	7400	131/-20	115/100	60/50	19.2/19.2	135	62
K2NA4C9DP47LV	4X	Listed	9000	7400	131/-20	230/200	60/50	9.0/9.0	135	62

* 115V 60 Hz models perform at reduced capacity when operated at 100V 50 Hz.
** Rating shown is for operation at maximum ambient temperature.



c UL us

NEMA
TYPE 4 OR 4X MAINTAINED

STANDARD FEATURES

- Baked Powder Finish (NEMA 4 models)
- Built-in Condensate Evaporator
- CFC-Free Refrigerant
- Closed-Loop Cooling
- Compressor Short Cycle Protector
- Condenser Impeller Speed Controller
- Epoxy-Coated Condenser and Evaporator Coils
- Filter
- Heavy-duty Steel Shell (NEMA 4 models)
- Internal Corrosion Protection (NEMA 4X models)
- NEMA 4 or 4X Rating Maintained (UL50)
- Programmable Temperature Alarm
- Programmable Thermostat
- Six-Foot [1.8m] (minimum) 3-Wire Power Cord
- Stainless Steel Shell (NEMA 4X models)
- UL/CUL Listed

ACCESSORIES AND OPTIONS

	Page
■ Adapter	86
■ Enclosure Heater	86
■ Filter Recoating Adhesive	86
■ Remote Monitoring	86
■ Remote Thermostat Relay	86
■ Replacement Filters	88
■ Special materials or finishes	✦
■ Special motors, line cords, or connectors	✦

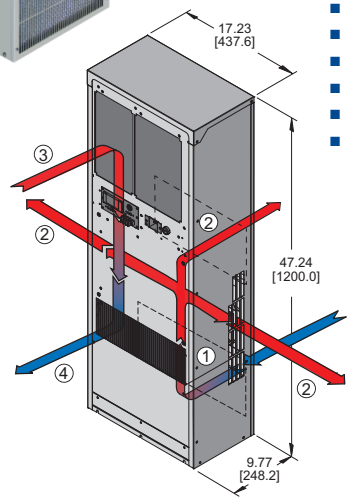

① FILTERED CONDENSER AIR INLET (Ambient Air In)
② CONDENSER OUTLET (Warm Ambient Air Out)
③ WARM AIR RETURN FROM ENCLOSURE
④ COOL AIR OUTLET TO ENCLOSURE

PERFORMANCE CHART

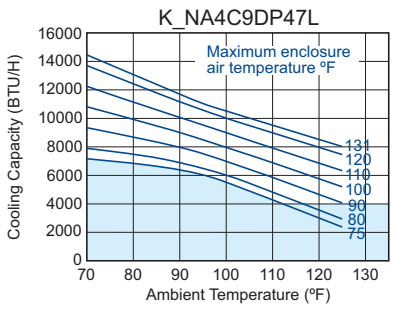

Operation within shaded area not recommended.

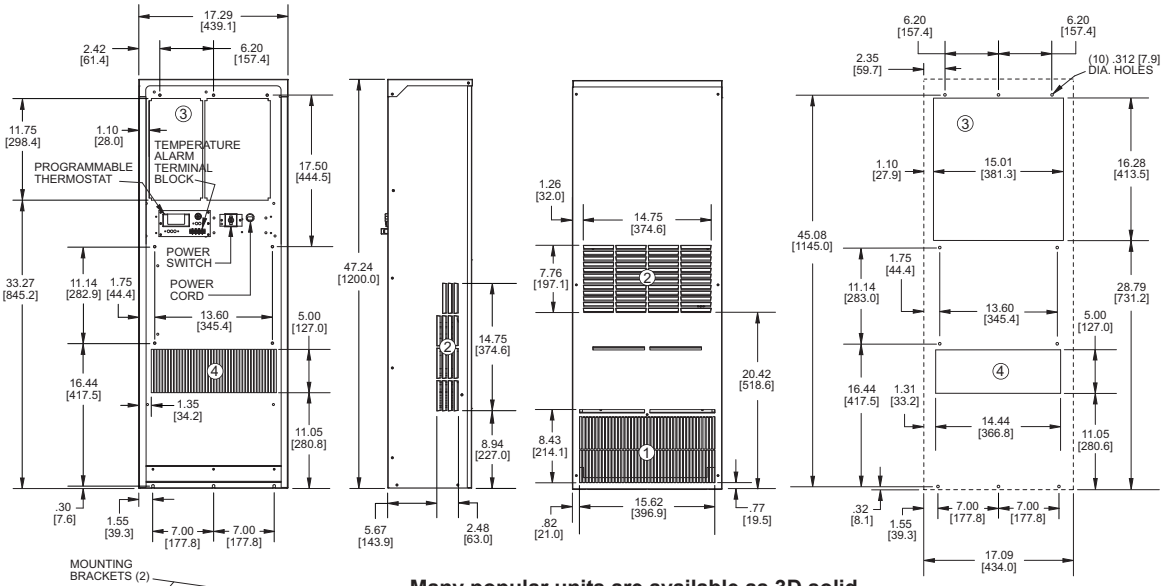

MOUNTING PLAN

Many popular units are available as 3D solid models for customer system integration. Please contact Kooltronic for details.

Dimensions, inches [mm], are for reference only and subject to change.

✦ Contact KOOLTRONIC for information.

DP50 GUARDIAN/GUARDIANX
NEMA 4 OR 4X AIR CONDITIONERS

Model	NEMA Rating	UL/CUL Listed or Recognized	BTU/H Capacity	95/95 Rating BTU/H	Ambient Temp. ºF Max./Min.	Volts	* Hz	** Running Amps	Approx. Weight lbs	kg
K2NA6C14DP50L	4	Listed	14000	13000	131/-20	208/230	60	13.5	207	95
K2NA6C14DP50L	4	Listed	13100	11700	131/-20	220	50	12.5	207	95
K2NA6C14DP50LV	4X	Listed	14000	13000	131/-20	208/230	60	13.5	207	95
K2NA6C14DP50LV	4X	Listed	13100	11700	131/-20	220	50	12.5	207	95

* 115V 60 Hz models perform at reduced capacity when operated at 100V 50 Hz.
** Rating shown is for operation at maximum ambient temperature.

STANDARD FEATURES

- Baked Powder Finish (NEMA 4 models)
- Closed-Loop Cooling
- Compressor Short Cycle Protector
- Condenser Blower Controller
- Epoxy-Coated Condenser and Evaporator Coils
- Filters (2)
- Heavy-duty Steel Shell (NEMA 4 models)
- Internal Corrosion Protection (NEMA 4X models)
- NEMA 4 or 4X Rating Maintained (UL50)
- Programmable Temperature Alarm
- Programmable Thermostat
- Six-Foot [1.8m] (minimum) 3-Wire Power Cord
- Stainless Steel Shell (NEMA 4X models)
- UL/CUL Listed
- Zero ODP Refrigerant

ACCESSORIES AND OPTIONS

	Page
Adapter	86
Enclosure Heater	86
Filter Recoating Adhesive	86
Remote Monitoring	86
Remote Thermostat Relay	86
Replacement Filters	88
Special materials or finishes	✦
Special motors, line cords, or connectors	✦

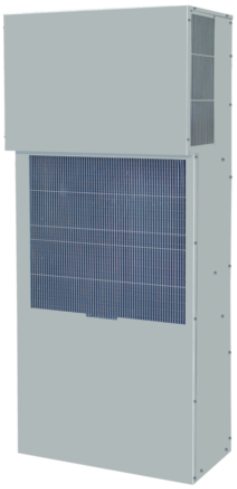

c UL us NEMA TYPE 4 OR 4X MAINTAINED

① FILTERED CONDENSER AIR INLET (Ambient Air In)
② CONDENSER OUTLET (Warm Ambient Air Out)
③ WARM AIR RETURN FROM ENCLOSURE
④ COOL AIR OUTLET TO ENCLOSURE

PERFORMANCE CHART
K2NA6C14DP50L, 60 Hz.*

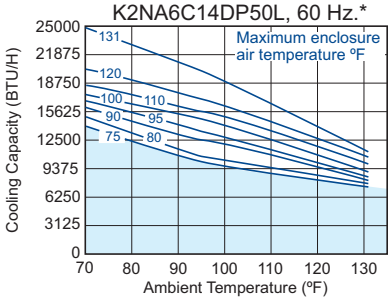

Operation within shaded area not recommended.
* Operation at 50 Hz will be 10 % less.

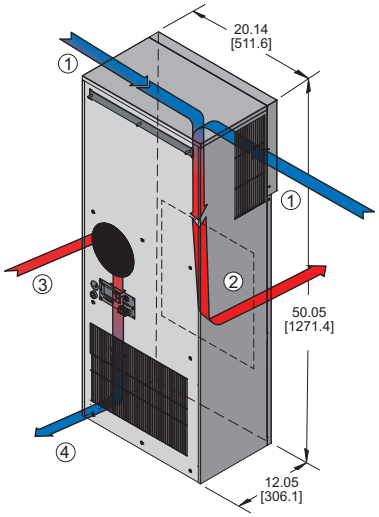

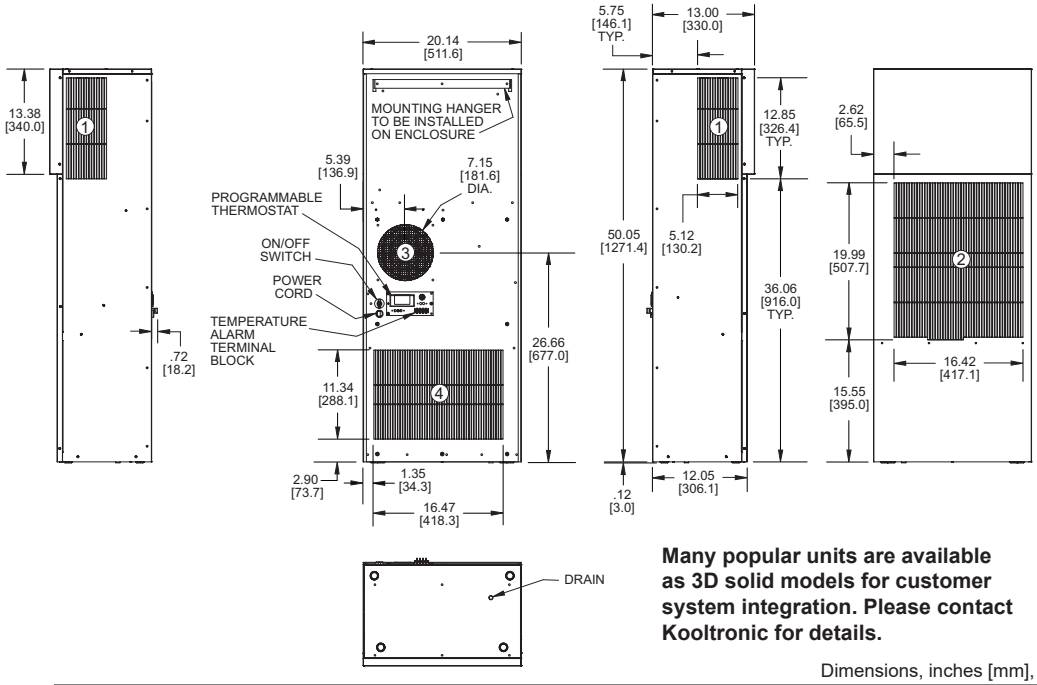

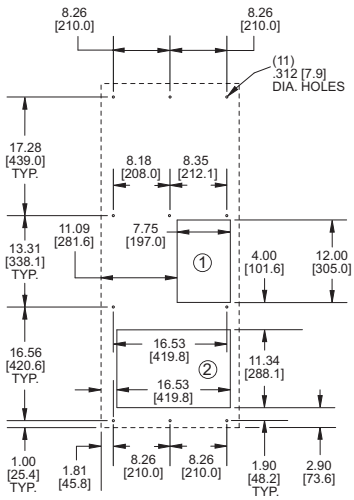

MOUNTING PLAN

Many popular units are available as 3D solid models for customer system integration. Please contact Kooltronic for details.

Dimensions, inches [mm], are for reference only and subject to change.

✦ Contact KOOLTRONIC for information.

DP53 GUARDIAN/GUARDIANX
NEMA 4 OR 4X AIR CONDITIONERS

Model	NEMA Rating	UL/CUL Listed or Recognized	BTU/H Capacity	95/95 Rating BTU/H	Ambient Temp. ºF Max./Min.	Volts	* Hz	** Running Amps	Approx. Weight lbs	kg
K2NA6C18DP53L	4	Listed	18000	15800	125/-20	208/230	60	20.0/17.1	224	102
K2NA6C18DP53L	4	Listed	14400	13000	131/-20	220	50	17.2	224	102
K2NA6C18DP53LV	4X	Listed	18000	15800	125/-20	208/230	60	20.0/17.1	224	102
K2NA6C18DP53LV	4X	Listed	14400	13000	131/-20	220	50	17.2	224	102

* 115V 60 Hz models perform at reduced capacity when operated at 100V 50 Hz.
** Rating shown is for operation at maximum ambient temperature.

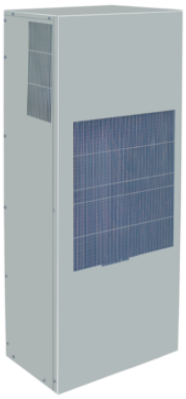

NEMA TYPE 4 OR 4X MAINTAINED

STANDARD FEATURES

- Baked Powder Finish (NEMA 4 models)
- Closed-Loop Cooling
- Compressor Short Cycle Protector
- Condenser Blower Controller
- Epoxy-Coated Condenser and Evaporator Coils
- Filters (2)
- Heavy-duty Steel Shell (NEMA 4 models)
- Internal Corrosion Protection (NEMA 4X models)
- NEMA 4 or 4X Rating Maintained (UL50)
- Programmable Temperature Alarm
- Programmable Thermostat
- Six-Foot [1.8m] (minimum) 3-Wire Power Cord
- Stainless Steel Shell (NEMA 4X models)
- UL/CUL Listed
- Zero ODP Refrigerant

ACCESSORIES AND OPTIONS

	Page
Adapter	86
Enclosure Heater	86
Filter Recoating Adhesive	86
Remote Monitoring	86
Remote Thermostat Relay	86
Replacement Filters	88
Special materials or finishes	✦
Special motors, line cords, or connectors	✦

① FILTERED CONDENSER AIR INLET (Ambient Air In)
② CONDENSER OUTLET (Warm Ambient Air Out)
③ WARM AIR RETURN FROM ENCLOSURE
④ COOL AIR OUTLET TO ENCLOSURE

PERFORMANCE CHART
K2NA6C18DP53L, 60 Hz.*

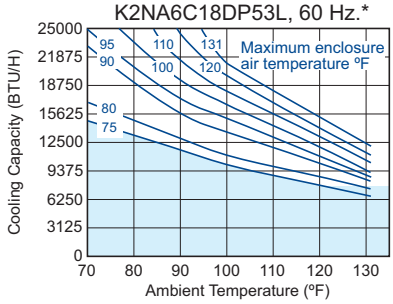

Operation within shaded area not recommended.
* Operation at 50 Hz will be 10 % less.

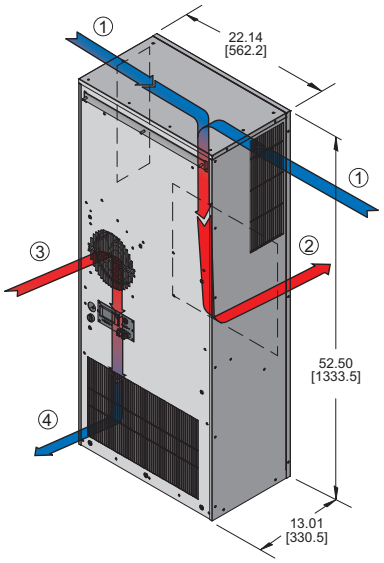

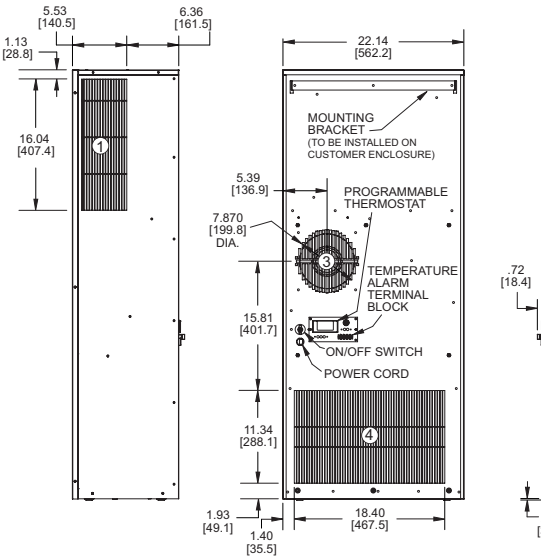

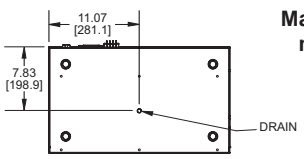

Many popular units are available as 3D solid models for customer system integration. Please contact Kooltronic for details.

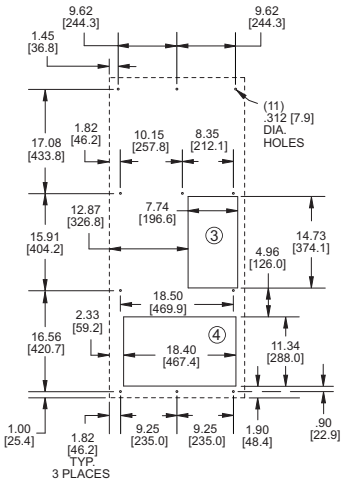

MOUNTING PLAN

Dimensions, inches [mm], are for reference only and subject to change.

✦ Contact KOOLTRONIC for information.

DP60 GUARDIAN/GUARDIANX
NEMA 4 OR 4X AIR CONDITIONERS

Model	NEMA Rating	UL/CUL Listed or Recognized	BTU/H Capacity	95/95 Rating BTU/H	Ambient Temp. ºF Max./Min.	Volts	* Hz	** Running Amps	Approx. Weight lbs	kg
K2NA6C26DP60L	4	Listed	26000	22800	131/-20	208/230	60	24.0/21.2	262	120
K2NA6C26DP60L	4	Listed	20800	18300	131/-20	220	50	21.0	262	120
K2NA6C26DP60LV	4X	Listed	26000	22800	131/-20	208/230	60	24.0/21.2	262	120
K2NA6C26DP60LV	4X	Listed	20800	18300	131/-20	220	50	21.0	262	120

* 115V 60 Hz models perform at reduced capacity when operated at 100V 50 Hz.
** Rating shown is for operation at maximum ambient temperature.

STANDARD FEATURES

- Baked Powder Finish (NEMA 4 models)
- Closed-Loop Cooling
- Compressor Short Cycle Protector
- Condenser Blower Controller
- Epoxy-Coated Condenser and Evaporator Coils
- Filters (2)
- Heavy-duty Steel Shell (NEMA 4 models)
- Internal Corrosion Protection (NEMA 4X models)
- Low Temperature Control Thermostat
- NEMA 4 or 4X Rating Maintained (UL50)
- Programmable Temperature Alarm
- Programmable Thermostat
- Six-Foot [1.8m] (minimum) 3-Wire Power Cord
- Stainless Steel Shell (NEMA 4X models)
- UL/CUL Listed
- Zero ODP Refrigerant

ACCESSORIES AND OPTIONS

	Page
Adapter	86
Enclosure Heater	86
Filter Recoating Adhesive	86
Remote Monitoring	86
Remote Thermostat Relay	86
Replacement Filters	88
Special materials or finishes	✦
Special motors, line cords, or connectors	✦



NEMA TYPE 4 OR 4X MAINTAINED

PERFORMANCE CHART

K2NA6C26DP60L, 60 Hz.*

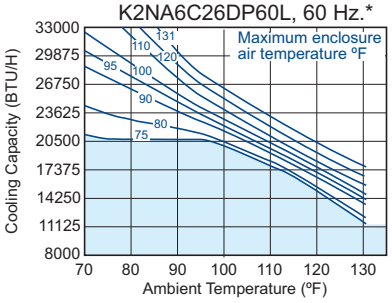

Operation within shaded area not recommended.
* Operation at 50 Hz will be 10 % less.

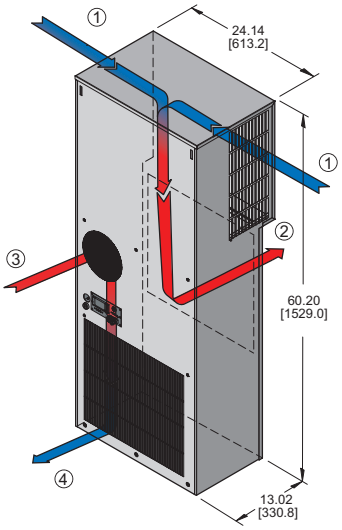

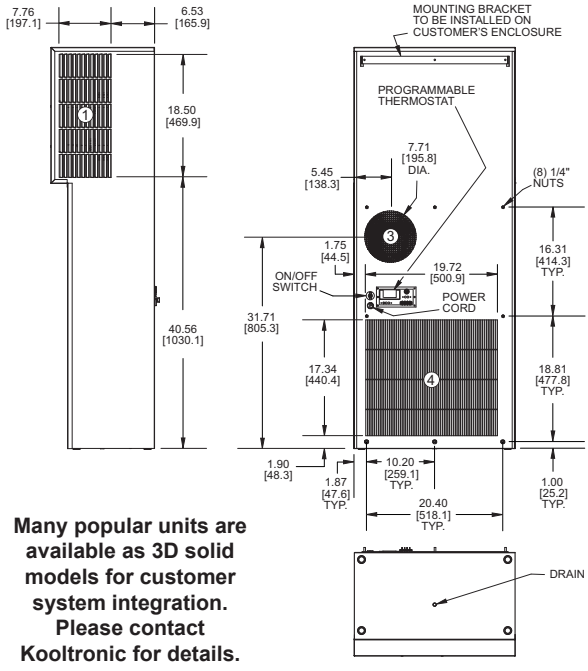

MOUNTING PLAN

Many popular units are available as 3D solid models for customer system integration. Please contact Kooltronic for details.

① FILTERED CONDENSER AIR INLET (Ambient Air In)
② CONDENSER OUTLET (Warm Ambient Air Out)
③ WARM AIR RETURN FROM ENCLOSURE
④ COOL AIR OUTLET TO ENCLOSURE

Dimensions, inches [mm], are for reference only and subject to change.

✦ Contact KOOLTRONIC for information.

GUARDIAN/GUARDIANX 480 VOLT NEMA 4 OR 4X AIR CONDITIONERS

DESCRIPTION

The ***Guardian*/*GuardianX 480 Volt Series*** indoor/outdoor Air Conditioners are designed specifically for **NEMA 4** or **4X** enclosure applications that require washdown or are subject to outdoor storm conditions. All ***Guardian*** models have a **NEMA 4** Rating. The ***GuardianX***, with a **NEMA 4X** Rating, is offered with a Stainless Steel Shell and Internal Corrosion Protection. These Air Conditioners have been engineered to operate under the most demanding industrial applications. The components used in these models have been specially designed and tested to maintain cooling efficiency in temperature controlled enclosures in bottling plants, the automotive industry and other commercial/manufacturing applications.

With Epoxy-coated condenser coils and tubing, the closed-loop cooling system of the ***Guardian/GuardianX 480 Volt Series*** offers added security by providing an operating environment safe from harsh ambient conditions.

The ***Guardian/GuardianX 480 Volt Series*** consists of units with heights from 24 to 60 inches, offering from 3,000 to 26,000 BTU/H ratings. In addition to the list of standard features, these ***Guardian/GuardianX 480 Volt Series*** Air Conditioners are also available with a wide range of accessories and options, including remote monitoring and enclosure heaters.

The features engineered into the ***Guardian/GuardianX 480 Volt Series*** make them a tamper-resistant choice for external applications. With all models UL/CUL Listed, the ***Guardian Series*** is an excellent choice for telecommunications, wastewater treatment, food and beverage and other challenging applications.

General specifications common to all KOOLTRONIC Air Conditioners are on the first page of this section.

KOOLTRONIC also designs and manufactures a variety of air conditioners to meet *unique* specifications. We invite your inquiries about our modification and custom-design capabilities.

CALL 1-800-321-KOOL (5665)
or FAX 609-466-1114

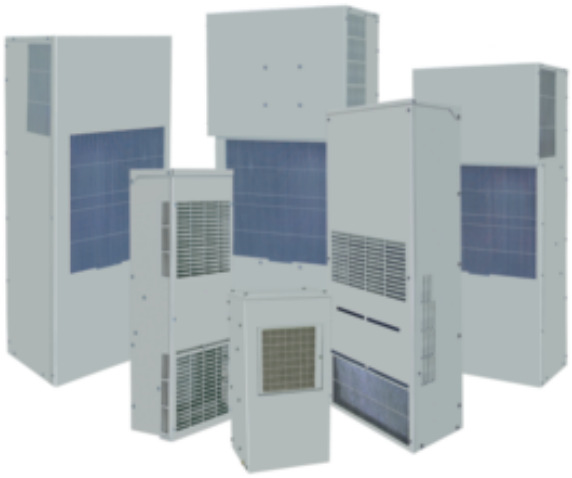

c UL us NEMA TYPE 4 OR 4X MAINTAINED

Many popular units are available as 3D solid models for customer system integration. Please contact Kooltronic for details.

Products in red are legacy products. Legacy products are no longer in normal production. Consult factory for availability.

STANDARD FEATURES

- All models UL/CUL Listed
- Baked Powder Finish (NEMA 4 models)
- Closed-Loop Cooling
- Epoxy-Coated Condenser and Evaporator Coils
- Heavy-duty Steel Shell (NEMA 4 models)
- Internal Corrosion Protection (NEMA 4X models)
- NEMA 4 or 4X Rating Maintained (UL50)
- Programmable Temperature Alarm
- Programmable Thermostat
- Stainless Steel Shell (NEMA 4X models)
- Zero ODP or CFC-Free Refrigerant

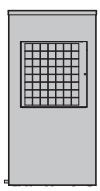

DP24
480 Volt
3,000 BTU/H
24"H x 12"W x 10"D

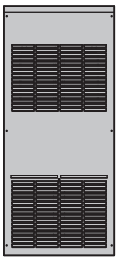

DP38
480 Volt
5,000 BTU/H
39"H x 17"W x 11"D

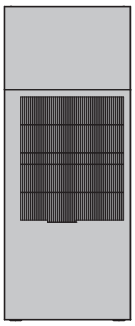

DP50
480 Volt
14,000 BTU/H
50"H x 20"W x 13"D

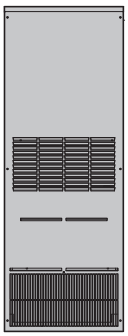

DP52
480 Volt
7,000 & 9,000 BTU/H
52"H x 17"W x 10"D

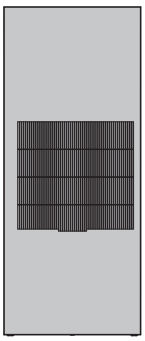

DP53
480 Volt
18,000 BTU/H
53"H x 22"W x 13"D

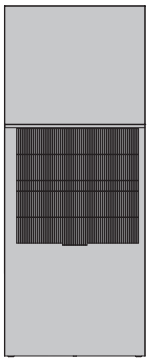

DP60
480 Volt
26,000 BTU/H
60"H x 24"W x 16"D

DP24 GUARDIAN/GUARDIANX 480 VOLT 1-PHASE NEMA 4 OR 4X AIR CONDITIONERS

Model	NEMA Rating	UL/CUL Listed or Recognized	BTU/H Rating	95/95 Rating	Ambient Temp. ºF Max./Min.	Volts/ Phase	Hz	* Running Amps	Starting Amps (LRA)	Airflow @ 60 Hz. Evap./Cond.	Fuse Size (Amps)	dBA @ 5 ft.	Approx. Weight lbs	kg
K3NA4C3DP24L	4	Listed	3000	2500	125/-20	480/1	60	1.4	4	171/173	15	69.2	61	28
K3NA4C3DP24LV	4X	Listed	3000	2500	125/-20	480/1	60	1.4	4	171/173	15	69.2	61	28

* Rating shown is for operation at maximum ambient temperature.

STANDARD FEATURES

- 480 Volt 1-Phase
- Baked Powder Finish (NEMA 4 models)
- Built-in Condensate Evaporator
- CFC-Free Refrigerant
- Closed-Loop Cooling
- Compressor Short Cycle Protector
- Condenser Blower Controller
- Epoxy-Coated Condenser and Evaporator Coils
- Filter
- Heavy-duty Steel Shell (NEMA 4 models)
- Internal Corrosion Protection (NEMA 4X)
- NEMA 4 or 4X Rating Maintained (UL50)
- Programmable Temperature Alarm
- Programmable Thermostat
- Stainless Steel Shell (NEMA 4X models)
- UL/CUL Listed

ACCESSORIES AND OPTIONS

	Page
Adapter	86
Enclosure Heater	86
Filter Recoating Adhesive	86
Remote Monitoring	86
Remote Thermostat Relay	86
Replacement Filters	88
Special paint finishes	✦



c UL us

NEMA
TYPE 4 OR 4X MAINTAINED

PERFORMANCE CHART

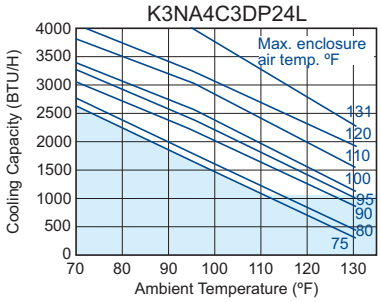

Operation within shaded area not recommended.

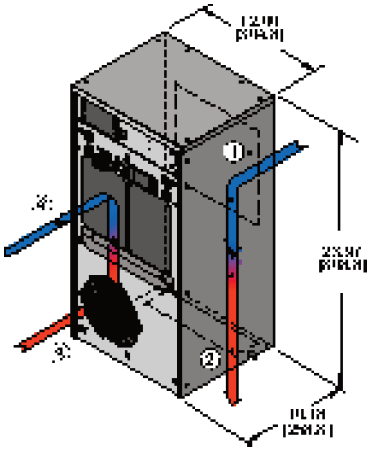

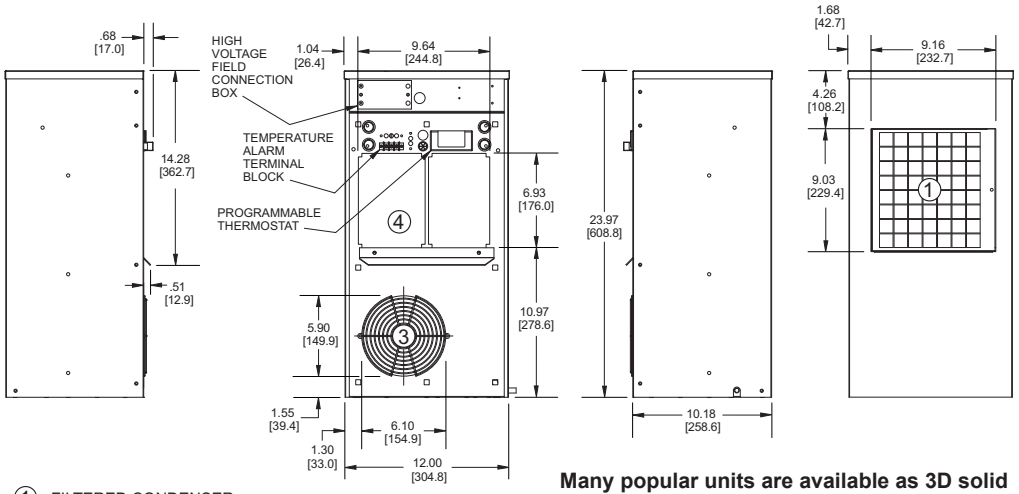

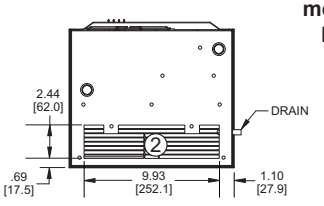

① FILTERED CONDENSER AIR INLET (Ambient Air In)
② CONDENSER OUTLET (Warm Ambient Air Out)
③ WARM AIR RETURN FROM ENCLOSURE
④ COOL AIR OUTLET TO ENCLOSURE

Many popular units are available as 3D solid models for customer system integration. Please contact Kooltronic for details.

MOUNTING PLAN

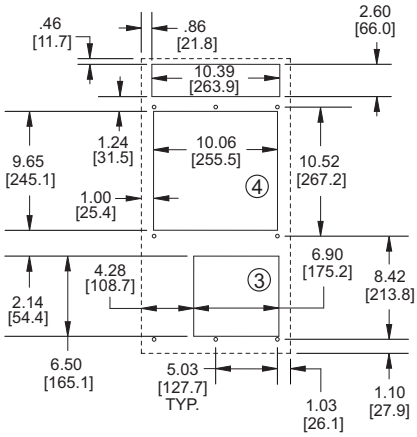

Dimensions, inches [mm], are for reference only and subject to change.

GUARDIAN/GUARDIANX 480 VOLT

DP38 GUARDIAN/GUARDIANX 480 VOLT NEMA 4 OR 4X AIR CONDITIONERS

Products in red are legacy products. Legacy products are no longer in normal production. Consult factory for availability.



NEMA TYPE 4 OR 4X MAINTAINED

Model	NEMA Rating	UL/CUL Listed or Recognized	BTU/H Rating	95/95 Rating	Ambient Temp. ºF Max./Min.	Volts	Hz	* Running Amps	Approx. Weight lbs	kg
K3NA4C5DP38L	4	Listed	5000	4800	131/0	480	60	2.0	115	52
K3NA4C5DP38LV	4X	Listed	5000	4800	131/0	480	60	2.0	115	52

* Rating shown is for operation at maximum ambient temperature.

STANDARD FEATURES

- Baked Powder Finish (NEMA 4 models)
- Built-in Condensate Evaporator
- CFC-Free Refrigerant
- Closed-Loop Cooling
- Compressor Short Cycle Protector
- Condenser Impeller Speed Controller
- Epoxy-Coated Condenser and Evaporator Coils
- External junction box for permanent wiring connection
- Filter
- Heavy-duty Steel Shell (NEMA 4 models)
- Internal Corrosion Protection (NEMA 4X models)
- NEMA 4 or 4X Rating Maintained (UL50)
- Programmable Temperature Alarm
- Programmable Thermostat
- Phase Sequence/Phase Loss Detector/Under Voltage Monitor
- Stainless Steel Shell (NEMA 4X models)
- UL/CUL Listed

ACCESSORIES AND OPTIONS

	Page
Adapter	86
Enclosure Heater	86
Filter Recoating Adhesive	86
Remote Monitoring	86
Remote Thermostat Relay	86
Replacement Filters	88
Special paint finishes	✦

PERFORMANCE CHART

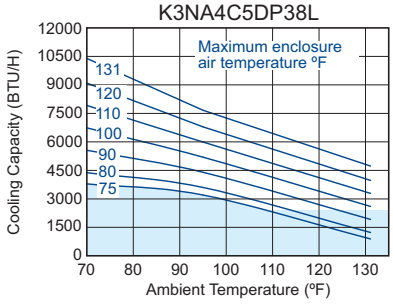

Operation within shaded area not recommended.

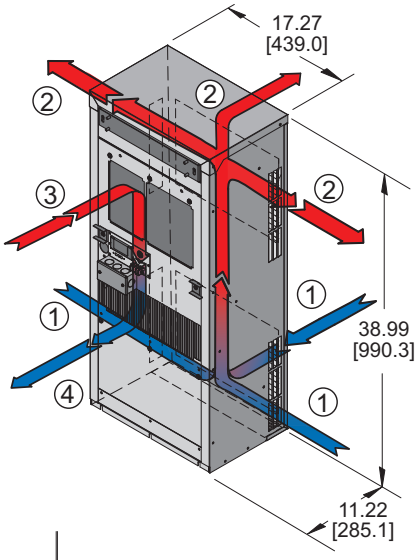

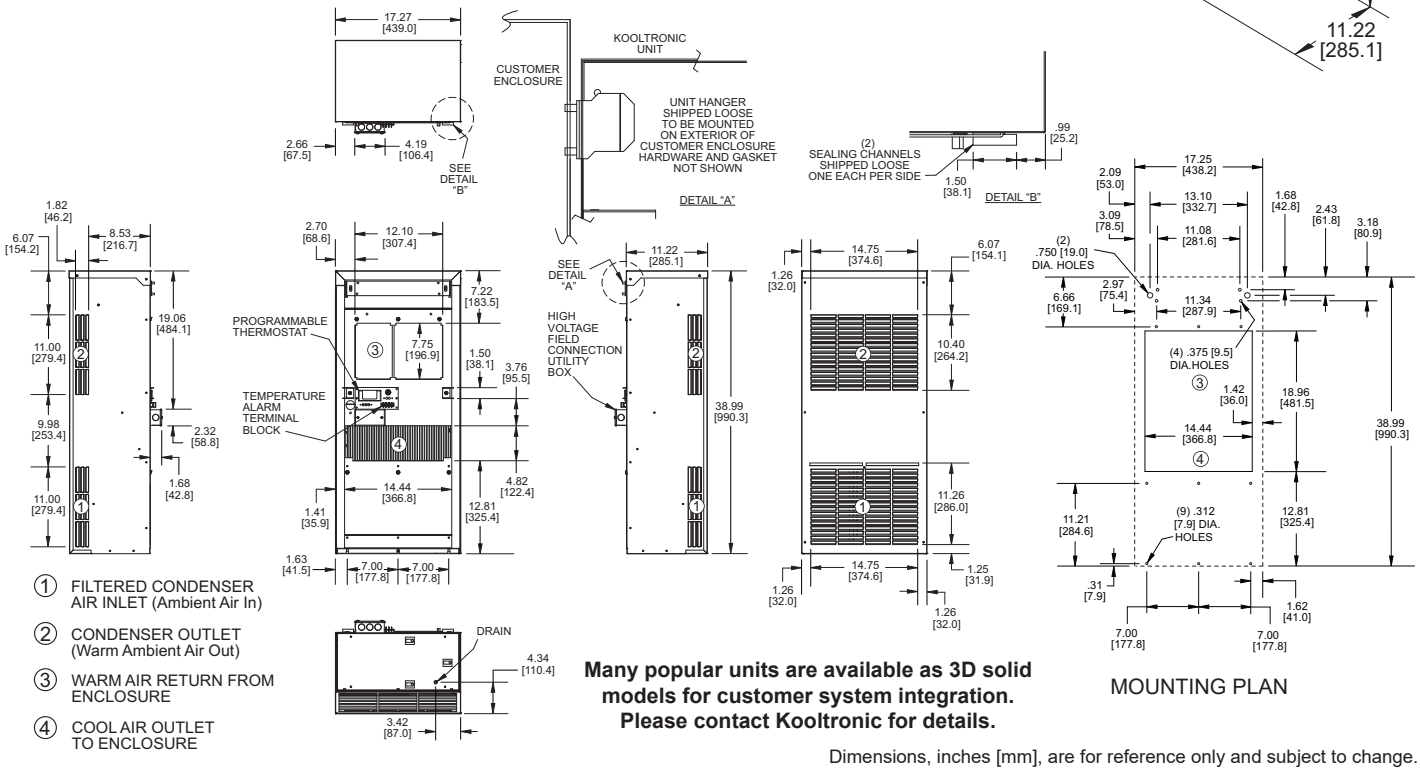

① FILTERED CONDENSER AIR INLET (Ambient Air In)

② CONDENSER OUTLET (Warm Ambient Air Out)

③ WARM AIR RETURN FROM ENCLOSURE

④ COOL AIR OUTLET TO ENCLOSURE

MOUNTING PLAN

Many popular units are available as 3D solid models for customer system integration. Please contact Kooltronic for details.

Dimensions, inches [mm], are for reference only and subject to change.

✦ Contact KOOLTRONIC for information.

DP50 GUARDIAN/GUARDIANX 480 VOLT NEMA 4 OR 4X AIR CONDITIONERS

Model	NEMA Rating	UL/CUL Listed or Recognized	BTU/H Rating	95/95 Rating	Ambient Temp. ºF Max./Min.	Volts	Hz	* Running Amps	Approx. Weight lbs	kg
K3NA4C14DP50L	4	Listed	14000	12634	131/-20	480	60	6.0	207	94
K3NA4C14DP50LV	4X	Listed	14000	12634	131/-20	480	60	6.0	207	94

* Rating shown is for operation at maximum ambient temperature.

STANDARD FEATURES

- Baked Powder Finish (NEMA 4 models)
- Closed-Loop Cooling
- Compressor Short Cycle Compressor
- Condenser Blower Controller
- Epoxy-Coated Condenser and Evaporator Coils
- External junction box for permanent wiring connections
- Filters (2)
- Heavy-duty Steel Shell (NEMA 4 models)
- Internal Corrosion Protection (NEMA 4X models)
- NEMA 4 or 4X Rating Maintained (UL50)
- Programmable Temperature Alarm
- Programmable Thermostat
- Stainless Steel Shell (NEMA 4X models)
- UL/CUL Listed
- Zero ODP Refrigerant

ACCESSORIES AND OPTIONS

	Page
Adapter	86
Enclosure Heater	86
Filter Recoating Adhesive	86
Remote Monitoring	86
Remote Thermostat Relay	86
Replacement Filters	88
Special paint finishes	✦

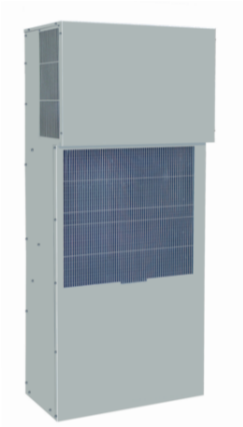

NEMA TYPE 4 OR 4X MAINTAINED

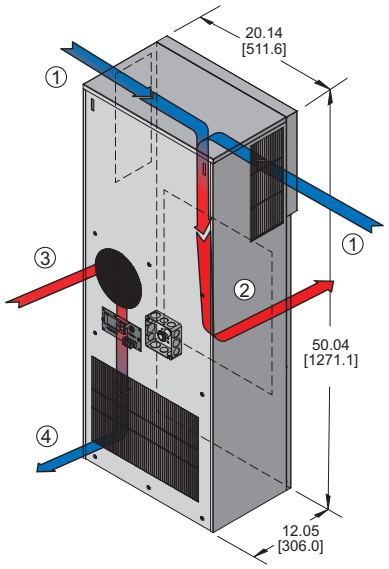

① FILTERED CONDENSER AIR INLET (Ambient Air In)

② CONDENSER OUTLET (Warm Ambient Air Out)

③ WARM AIR RETURN FROM ENCLOSURE

④ COOL AIR OUTLET TO ENCLOSURE

PERFORMANCE CHART

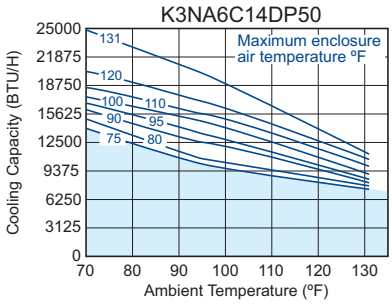

Operation within shaded area not recommended.

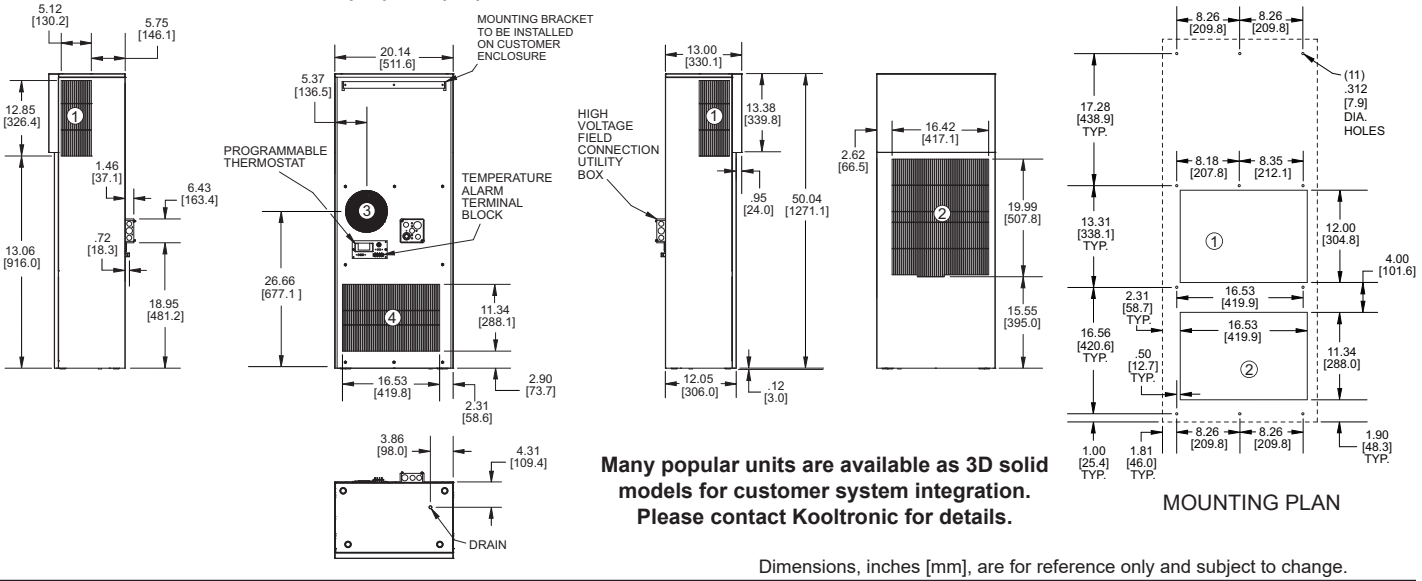

MOUNTING PLAN

Many popular units are available as 3D solid models for customer system integration. Please contact Kooltronic for details.

Dimensions, inches [mm], are for reference only and subject to change.

✦ Contact KOOLTRONIC for information.

DP52 GUARDIAN/GUARDIANX 480 VOLT NEMA 4 OR 4X AIR CONDITIONERS

Products in red are legacy products. Legacy products are no longer in normal production. Consult factory for availability.

Model	NEMA Rating	UL/CUL Listed or Recognized	BTU/H Capacity	95/95 Rating BTU/H	Ambient Temp. ºF Max./Min.	Volts	Hz	* Running Amps	Approx. Weight lbs	kg
K3NA4C7DP52L	4	Listed	7000	6300	131/0	480	60	3.0	160	73
K3NA4C7DP52LV	4X	Listed	7000	6300	131/0	480	60	3.0	160	73
K3NA4C9DP52L	4	Listed	9000	8100	131/0	480	60	4.0	164	74
K3NA4C9DP52LV	4X	Listed	9000	8100	131/0	480	60	4.0	164	74

* Rating shown is for operation at maximum ambient temperature.



c UL us

NEMA
TYPE 4 OR 4X MAINTAINED

STANDARD FEATURES

- Baked Powder Finish (NEMA 4 models)
- Built-in Condensate Evaporator
- CFC-Free Refrigerant
- Closed-Loop Cooling
- Compressor Short Cycle Protector
- Epoxy-Coated Condenser and Evaporator Coils
- External junction box for permanent wiring connections
- Filters (2)
- Heavy-duty Steel Shell (NEMA 4 models)
- Internal Corrosion Protection (NEMA 4X models)
- NEMA 4 or 4X Rating Maintained (UL50)
- Phase Sequence/Phase Loss Detector/Under Voltage Monitor
- Programmable Temperature Alarm
- Programmable Thermostat
- Stainless Steel Shell (NEMA 4X models)
- UL/CUL Listed

ACCESSORIES AND OPTIONS

	Page
Adapter	86
Enclosure Heater	86
Filter Recoating Adhesive	86
Remote Monitoring	86
Remote Thermostat Relay	86
Replacement Filters	88
Special paint finishes	✦

PERFORMANCE CHART
K3NA4C7DP52L

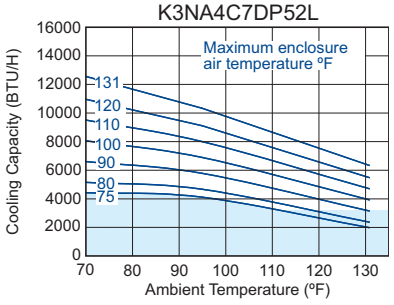

Operation within shaded area not recommended.

PERFORMANCE CHART
K3NA4C9DP52L

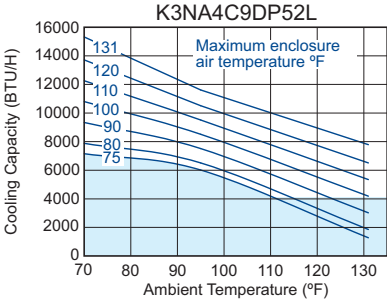

Operation within shaded area not recommended.

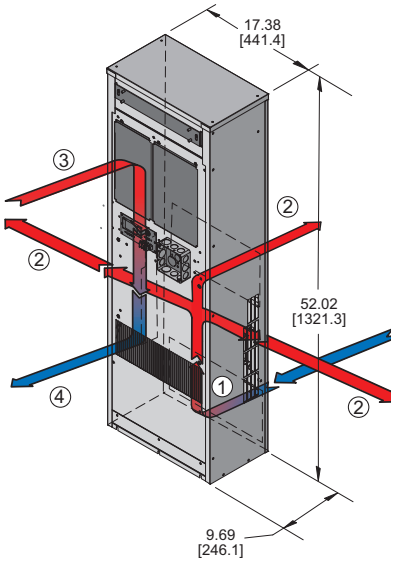

① FILTERED CONDENSER AIR INLET (Ambient Air In)
② CONDENSER OUTLET (Warm Ambient Air Out)
③ WARM AIR RETURN FROM ENCLOSURE
④ COOL AIR OUTLET TO ENCLOSURE

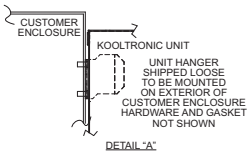

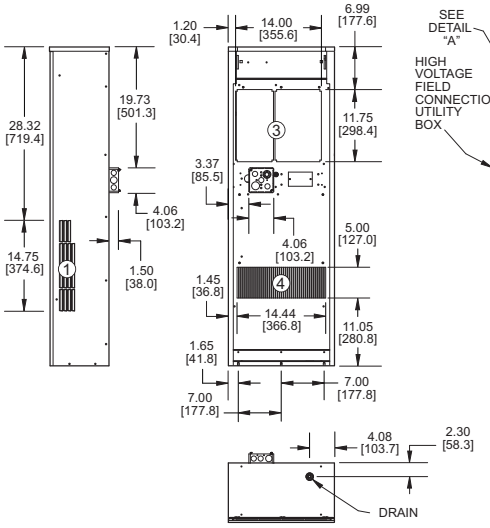

Many popular units are available as 3D solid models for customer system integration. Please contact Kooltronic for details.

MOUNTING PLAN

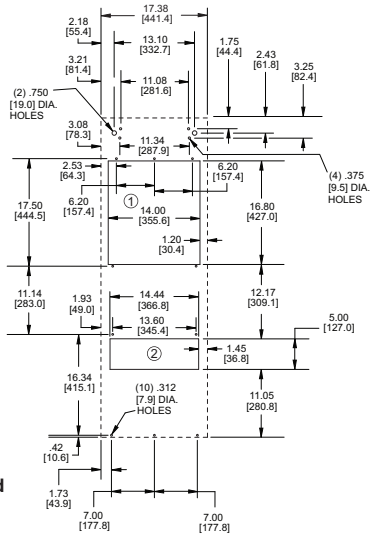

Dimensions, inches [mm], are for reference only and subject to change.

✦ Contact KOOLTRONIC for information.

DP53 GUARDIAN/GUARDIANX 480 VOLT NEMA 4 OR 4X AIR CONDITIONERS

Model	NEMA Rating	UL/CUL Listed or Recognized	BTU/H Rating	95/95 Rating	Ambient Temp. ºF Max./Min.	Volts	* Hz	** Running Amps	Approx. Weight lbs	kg
K3NA4C18DP53L	4	Listed	18000	16300	131/0	480	60	7.1	224	102
K3NA4C18DP53LV	4X	Listed	18000	16300	131/0	480	60	7.1	224	102

* Rating shown is for operation at maximum ambient temperature.

STANDARD FEATURES

- Baked Powder Finish (NEMA 4 models)
- Closed-Loop Cooling
- Compressor Short Cycle Protector
- Condenser Blower Controller
- Epoxy-Coated Condenser and Evaporator Coils
- External junction box for permanent wiring connections
- Filters (2)
- Heavy-duty Steel Shell (NEMA 4 models)
- Internal Corrosion Protection (NEMA 4X models)
- NEMA 4 or 4X Rating Maintained (UL50)
- Programmable Temperature Alarm
- Programmable Thermostat
- Stainless Steel Shell (NEMA 4X models)
- UL/CUL Listed
- Zero ODP Refrigerant

ACCESSORIES AND OPTIONS

	Page
Adapter	86
Enclosure Heater	86
Filter Recoating Adhesive	86
Remote Monitoring	86
Remote Thermostat Relay	86
Replacement Filters	88
Special paint finishes	✦

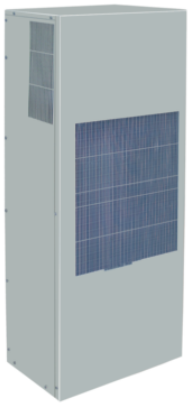

PERFORMANCE CHART

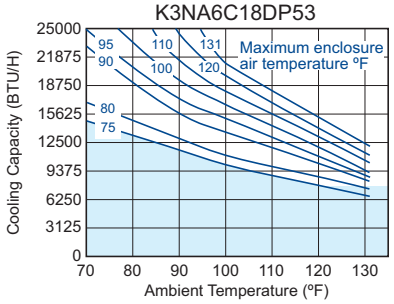

Operation within shaded area not recommended.

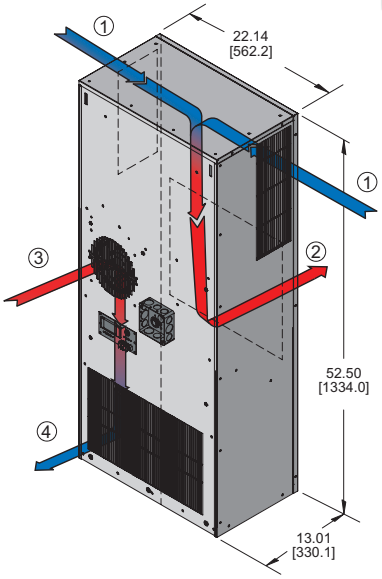

c UL us

NEMA
TYPE 4 OR 4X MAINTAINED

① FILTERED CONDENSER AIR INLET (Ambient Air In)

② CONDENSER OUTLET (Warm Ambient Air Out)

③ WARM AIR RETURN FROM ENCLOSURE

④ COOL AIR OUTLET TO ENCLOSURE

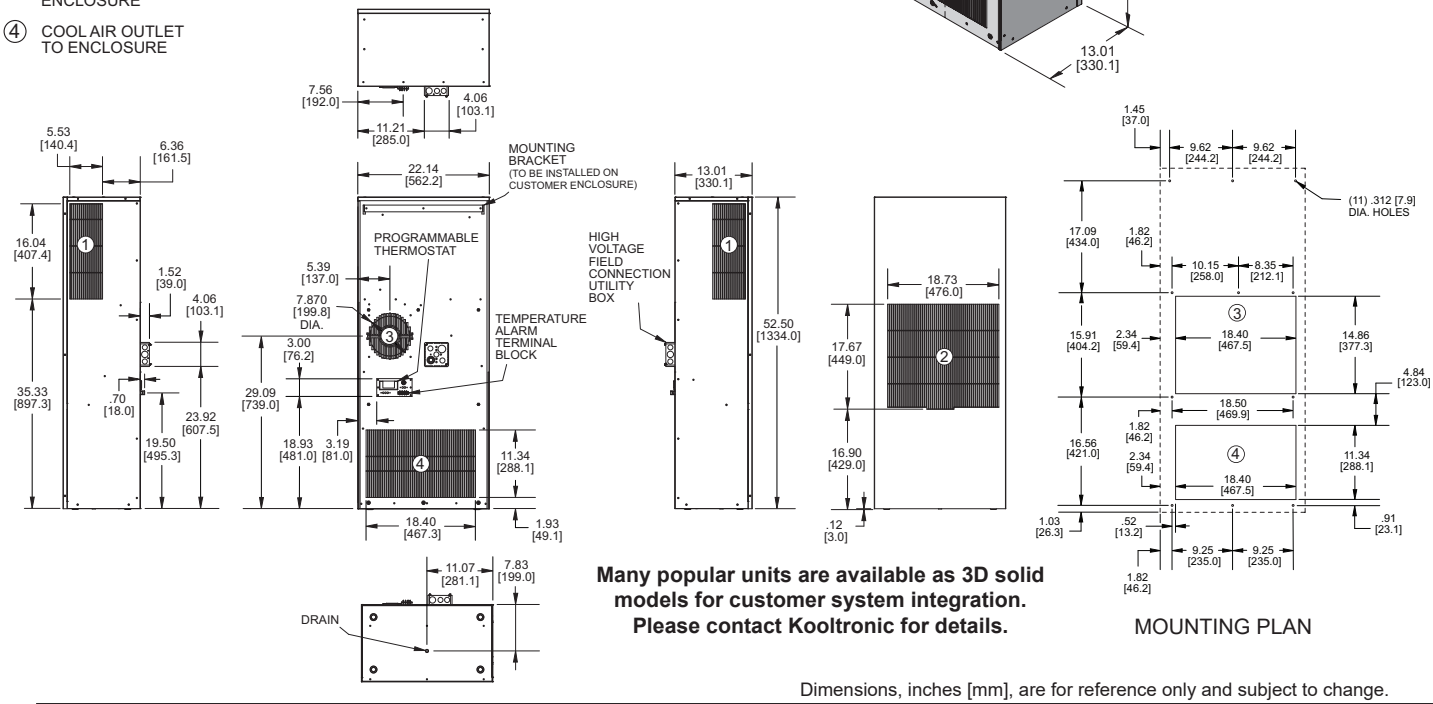

Many popular units are available as 3D solid models for customer system integration. Please contact Kooltronic for details.

MOUNTING PLAN

Dimensions, inches [mm], are for reference only and subject to change.

✦ Contact KOOLTRONIC for information.

DP60 GUARDIAN/GUARDIANX 480 VOLT
NEMA 4 OR 4X AIR CONDITIONERS

Model	NEMA Rating	UL/CUL Listed or Recognized	BTU/H Capacity	95/95 Rating BTU/H	Ambient Temp. ºF Max./Min.	Volts	Hz	* Running Amps	Approx. Weight lbs	kg
K3NA6C26DP60L	4	Listed	26000	22240	125/-20	480	60	8.7	262	119
K3NA6C26DP60LV	4X	Listed	26000	22240	125/-20	480	60	8.7	262	119

* Rating shown is for operation at maximum ambient temperature.

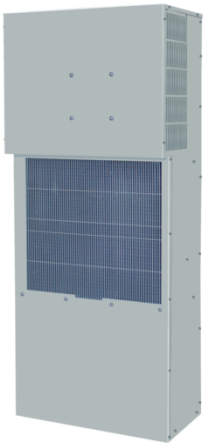

NEMA TYPE 4 OR 4X MAINTAINED

c UL us

STANDARD FEATURES

- Baked Powder Finish (NEMA 4 models)
- Closed-Loop Cooling
- Compressor Short Cycle Protector
- Condenser Blower Controller
- Epoxy-Coated Condenser and Evaporator Coils
- External junction box for permanent wiring connections
- Filters (2)
- Heavy-duty Steel Shell (NEMA 4 models)
- Internal Corrosion Protection (NEMA 4X models)
- NEMA 4 or 4X Rating Maintained (UL50)
- Programmable Temperature Alarm
- Programmable Thermostat
- Stainless Steel Shell (NEMA 4X models)
- UL/CUL Listed
- Zero ODP Refrigerant

ACCESSORIES AND OPTIONS

	Page
Adapter	86
Enclosure Heater	86
Filter Recoating Adhesive	86
Remote Monitoring	86
Remote Thermostat Relay	86
Replacement Filters	88
Special paint finishes	✦

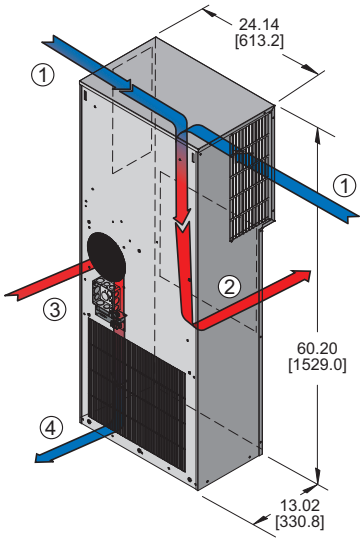

① FILTERED CONDENSER AIR INLET (Ambient Air In)

② CONDENSER OUTLET (Warm Ambient Air Out)

③ WARM AIR RETURN FROM ENCLOSURE

④ COOL AIR OUTLET TO ENCLOSURE

PERFORMANCE CHART

K3NA6C26DP60L

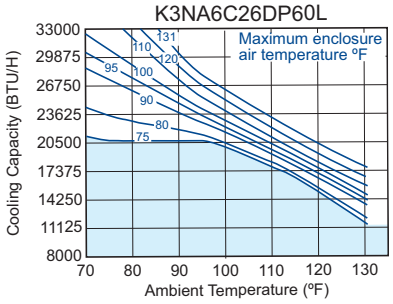

Operation within shaded area not recommended.

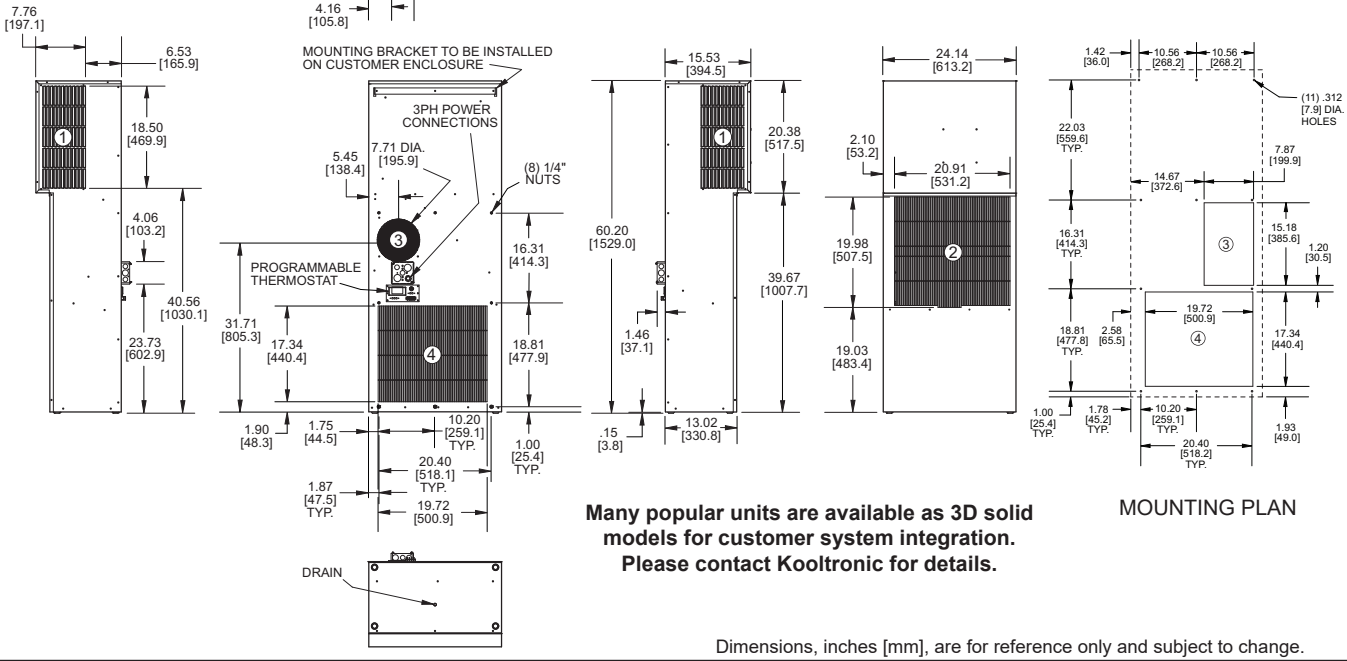

MOUNTING PLAN

Many popular units are available as 3D solid models for customer system integration. Please contact Kooltronic for details.

Dimensions, inches [mm], are for reference only and subject to change.

✦ Contact KOOLTRONIC for information.

ACCESS SERIES
ULTRA SLIM, ENCLOSURE AIR CONDITIONERS



NEMA TYPE 12 & 3R MAINTAINED

Many popular units are available as 3D solid models for customer system integration. Please contact Kooltronic for details.

DESCRIPTION

The new Kooltronic ***Access Series*** Ultra-Slim Enclosure Air Conditioners are an air-cooled, closed-loop enclosure cooling solution featuring an ultra-thin 5-inch depth. These models are specially engineered to improve operating efficiency and increase application longevity for electrical components in smaller, limited-space enclosures such as self-service kiosks, ATMs and digital signage. The Access Series Enclosure AC Units are also suitable for mounting on doors of electrical enclosures and control cabinets found in many industrial applications.

Kooltronic's ***Access Series*** Enclosure Air Conditioners are designed to meet a cooling capacity of 2,000 BTU/H and can be configured for applicable enclosure IP designations and voltage needs.

Outdoor or corrosive environments require weather protection and/or special internal and external protective features. For extreme ambient temperatures and/or severely contaminated environments, the use of Water-Cooled Enclosure Air Conditioners or Water-Cooled Heat Exchangers is recommended.

Many popular units are available as 3D solid models for customer system integration. Kooltronic also designs and manufactures custom-tailored cooling and airflow solutions to meet unique specifications. We invite your inquiries about our modification and custom-design capabilities.

KOOLTRONIC also designs and manufactures a variety of air conditioners to meet *unique* specifications. We invite your inquiries about our modification and custom-design capabilities.

CALL 1-800-321-KOOL (5665)
or FAX 609-466-1114

ACCESS

STANDARD FEATURES

- All models UL/CUL Listed
- CFC-Free Refrigerant
- Condensor Impeller Cycling Controller
- Galvanized Steel G90U Exterior Shell
- Ideal for Inconspicuous Internal Mounting
- Programmable Temperature Alarm
- Minimum Six-Foot [1.8 Meter] 3-wire Power Cord

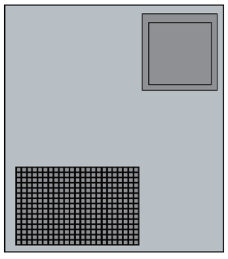

DSP 23
2,000 BTU/H
24"H x 22"W x 5"D

ACCESS SERIES DSP23
ULTRA SLIM, PANEL-MOUNT AIR CONDITIONER

Model	NEMA Rating	BTU/H Rating	95/95 Rating	Ambient Temp. °F Max./Min.	Ambient Temp. °C Max./Min.	Volts	Hz	* Running Amps	Approx. Weight lbs	Approx. Weight kg
KA4C2DSP23L	3R & 12	2000	2373	122/-20	50/-28	115	60	5.03	51	24
K2A4C2DSP23L	3R & 12	2000	2360	122/-20	50/-28	230	60	2.87	51	24
K2A4C2DSP23L	3R & 12	2000	2170	122/-20	50/-28	230	50	2.30	51	24

* Rating shown is for operation at maximum ambient temperature.

STANDARD FEATURES

- Built-In Condensate Evaporator
- CFC-Free Refrigerant
- Closed-Loop Cooling
- Compact Design/Slim Mounting Footprints
- Compressor Short Cycle Protector
- Condensor Impeller Cycling Control
- Epoxy-Coated Condenser and Evaporator Coils
- Galvanized Steel G90U Exterior Shell
- NEMA 12 & 3R Ratings Maintained
- Programmable Temperature Alarm
- Programmable Thermostat
- UL/CUL Listed

ACCESSORIES AND OPTIONS

	Page
Enclosure Heater	86
Filter	88
Filter Recoating Adhesive	86
Heavy-Duty Steel Shell	86
Remote Monitoring	86
Remote Thermostat Relay	86
Replacement Filters	88

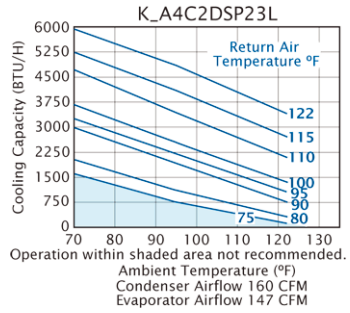

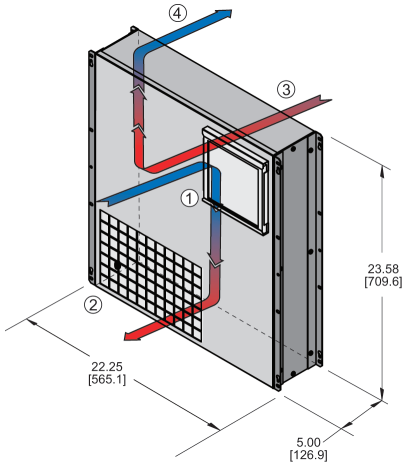

① CONDENSER AIR INLET (Ambient Air In)
② CONDENSER OUTLET (Warm Ambient Air Out)
③ WARM AIR RETURN FROM ENCLOSURE
④ COOL AIR OUTLET TO ENCLOSURE

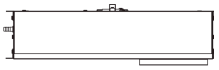

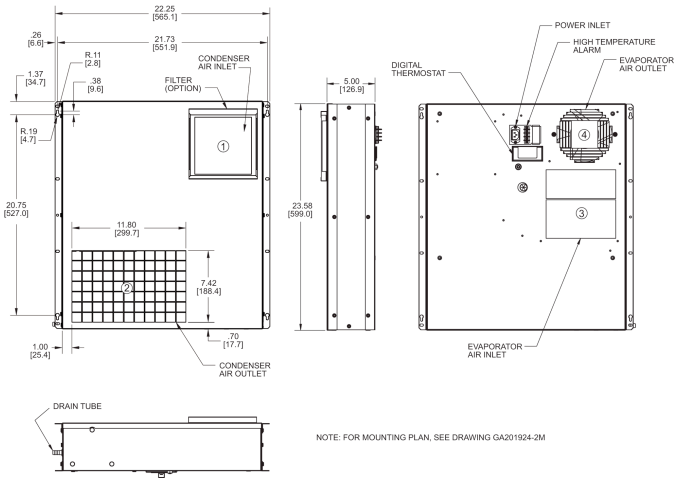

NOTE: FOR MOUNTING PLAN, SEE DRAWING GA201924-2M

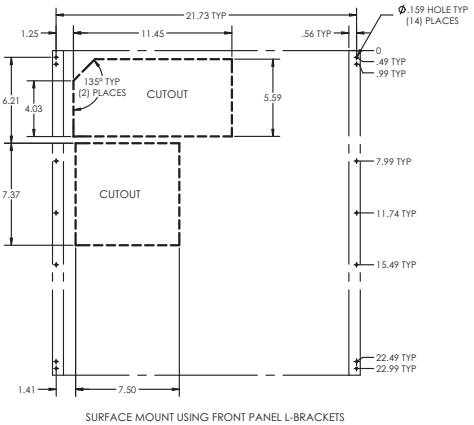

SURFACE MOUNT USING FRONT PANEL L-BRACKETS

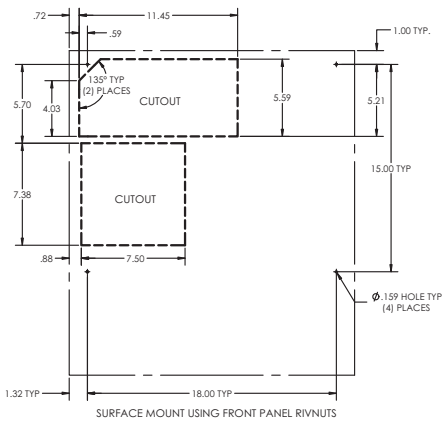

SURFACE MOUNT USING FRONT PANEL RIVNUTS

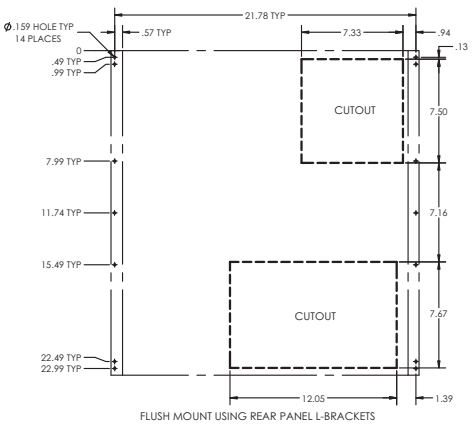

FLUSH MOUNT USING REAR PANEL L-BRACKETS

Many popular units are available as 3D solid models for customer system integration. Please contact Kooltronic for details.

Dimensions, inches [mm], are for reference only and subject to change.

✦ Contact KOOLTRONIC for information.

SLIMKOOL (NARROW WIDTH)
NEMA 4 or 4X AIR CONDITIONERS

DESCRIPTION

The ***SlimKool Series*** indoor/outdoor Air Conditioners can be mounted on the exterior of shallow electrical enclosures common in the industry today. The Kooltronic ***SlimKool Series*** consists of compact models with a standard width of 11.75 inches and a standard depth of 15.1 inches, with heights ranging from 28 to 43 inches. These models offer capacities from 4,000 to 11,000 BTU/H, and can operate in ambient temperatures between -20 and 131ºF.

With epoxy-coated coils and tubing, the closed-loop cooling system of the ***SlimKool Series*** offers added security by providing an operating environment safe from harsh ambient conditions.

The ***SlimKool Series*** models are equipped with a programmable thermostat as standard on all models, allowing more accurate and versatile performance features.

The ***SlimKool Series*** models are constructed of 18 guage (or heavier) galvanized steel, and painted with a polyester powder coating. These units are available in 115, 230 and 480 Volt, and are rated NEMA 12, 3R and 4. NEMA 4X protection is offered with a stainless steel shell. From indoor washdown to outdoor corrosive environments, this versatility makes the ***SlimKool Series*** a perfect choice for virtually every application.

KOOLTRONIC also designs and manufactures a variety of air conditioners to meet *unique* specifications. We invite your inquiries about our modification and custom-design capabilities.



NEMA
TYPE 12, 3R & 4 MAINTAINED (4X OPTIONAL)

CALL 1-800-321-KOOL (5665)
or FAX 609-466-1114

Many popular units are available as 3D solid models for customer system integration. Please contact Kooltronic for details.

SLIMKOOL

STANDARD FEATURES

- All Models UL/CUL Listed
- Built-in Condensate Evaporator
- Closed-Loop Cooling
- Compressor Short Cycle Protector
- Epoxy-Coated Evaporator and Condenser Coils
- Internal Corrosion Protection
- NEMA 12, 3R & 4 Ratings Maintained (UL50) (4X Optional)
- Programmable Temperature Alarm
- Programmable Thermostat
- Stainless Steel Shell (NEMA 4X models)

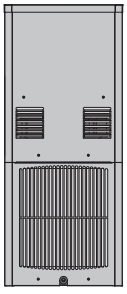

SP28L
4,000 BTU/H
28"Hx12"Wx15"D

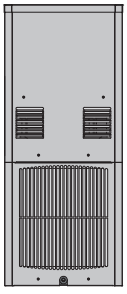

SP28LV 480 Volt
4,000 BTU/H
28"Hx12"Wx15"D

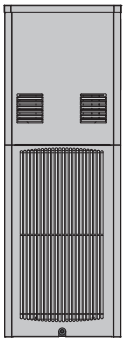

SP36L
6,000 & 8,000 BTU/H
36"Hx12"Wx15"D

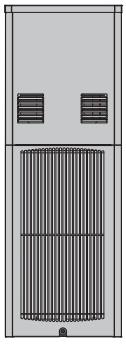

SP36LV 480 Volt
6,000 & 8,000 BTU/H
36"Hx12"Wx15"D

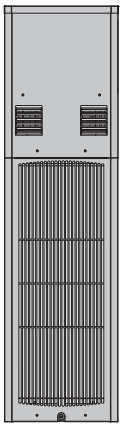

SP43L
11,000 BTU/H
43"Hx12"Wx15"D

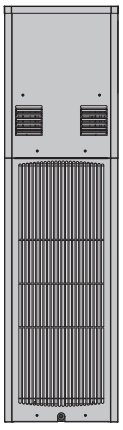

SP43L 480 Volt
11,000 BTU/H
43"Hx12"Wx15"D

SLIMKOOL (NARROW WIDTH) SP28
NEMA 4 or 4X AIR CONDITIONERS



Model	NEMA Rating	BTU/H Rating	95/95 Rating	Ambient Temp. °F Max./Min.	Ambient Temp. °C Max./Min.	Volts	Hz	* Running Amps	Approx. Weight lbs	Approx. Weight kg
KNA4C4SP28L	4	4000	3700	131/-20	55/-28	115/100	60/50	9.7/9.4	85	39
K2NA4C4SP28L	4	4000	3700	131/-20	55/-28	208/230 200	60/60 50	4.7/4.2 4.2	85	39
KNA4C4SP28LV	4X	4000	3700	131/-20	55/-28	115/100	60/50	9.7/9.4	85	39
K2NA4C4SP28LV	4X	4000	3700	131/-20	55/-28	208/230 200	60/50 50	4.7/4.2 4.2	85	39

* Rating shown is for operation at maximum ambient temperature.

c UL us

NEMA
TYPE 12, 3R & 4 MAINTAINED (4X OPTIONAL)

STANDARD FEATURES

- Built-in Condensate Evaporator
- CFC-Free Refrigerant
- Closed-Loop Cooling
- Compact Design/Slim Mounting Footprint
- Compressor Short Cycle Protector
- Condenser Impeller Cycling Control
- Epoxy-Coated Evaporator and Condenser Coils
- Filter
- Heavy-duty Galvanized Steel Shell with ANSI 61 Gray Powder Coating
- Internal Corrosion Protection
- NEMA 12, 3R & 4 Ratings Maintained (UL50) (4X Optional)
- Programmable Temperature Alarm
- Programmable Thermostat
- Stainless Steel Shell (NEMA 4X models)
- UL/CUL Listed

ACCESSORIES AND OPTIONS

	Page
Adapter	86
Enclosure Heater	86
Filter Recoating Adhesive	86
Remote Monitoring	86
Remote Thermostat Relay	86
Replacement Filters	88

① FILTERED CONDENSER AIR INLET (Ambient Air In)
② CONDENSER OUTLET (Warm Ambient Air Out)
③ WARM AIR RETURN FROM ENCLOSURE
④ COOL AIR OUTLET TO ENCLOSURE

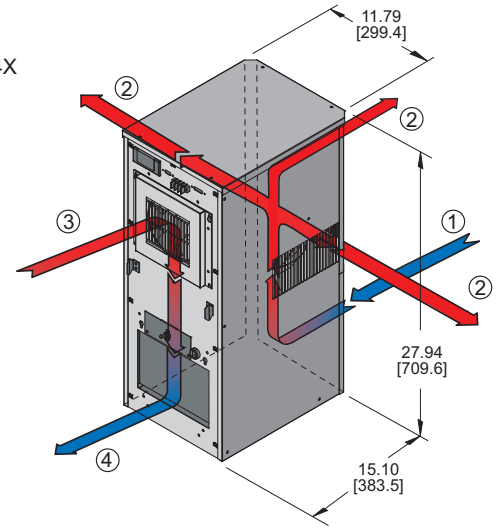

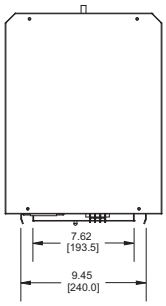

PERFORMANCE CHART

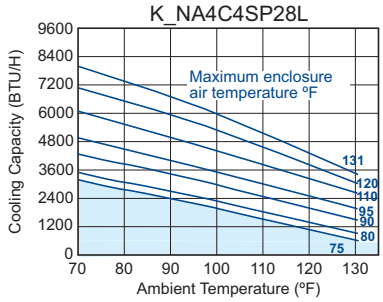

Operation within shaded area not recommended.

Many popular units are available as 3D solid models for customer system integration. Please contact Kooltronic for details.

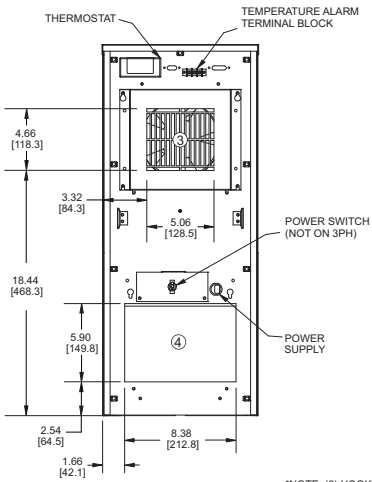

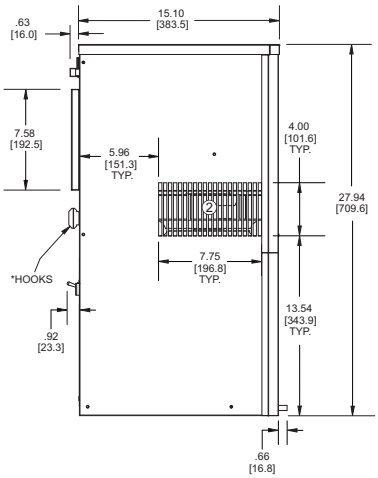

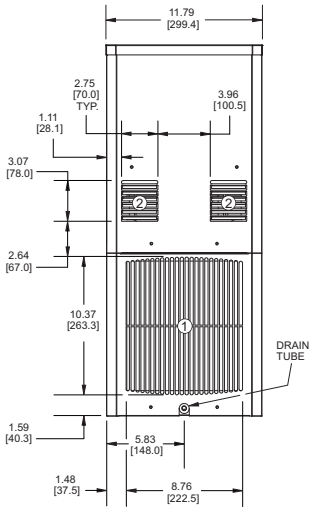

*NOTE: (2) HOOKS ARE MOUNTED TO THE UNIT BY CUSTOMER

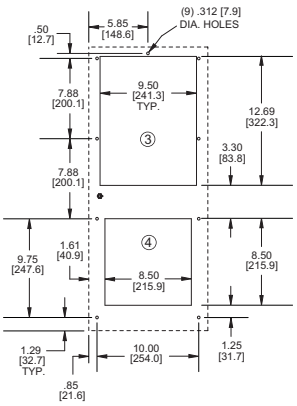

MOUNTING PLAN

Dimensions, inches [mm], are for reference only and subject to change.

✦ Contact KOOLTRONIC for information.

SLIMKOOL SP28 480 VOLT 3-PHASE NEMA 4 or 4X AIR CONDITIONERS

Model	NEMA Rating	BTU/H Rating	95/95 Rating	Ambient Temp. °F Max./Min.	Ambient Temp. °C Max./Min.	Volts	Hz	* Running Amps	Approx. Weight lbs	Approx. Weight kg
K3NA4C4SP28L	4	4000	3500	131/-20	55/-28	480	60	2.1	95	43
K3NA4C4SP28LV	4X	4000	3500	131/-20	55/-28	480	60	2.1	95	43

* Rating shown is for operation at maximum ambient temperature.



STANDARD FEATURES

- Built-in Condensate Evaporator
- CFC-Free Refrigerant
- Closed-Loop Cooling
- Compact Design/Slim Mounting Footprint
- Compressor Short Cycle Protector
- Condenser Impeller Cycling Control
- Epoxy-Coated Evaporator and Condenser Coils
- Filter
- Heavy-duty Galvanized Steel Shell with ANSI 61 Gray Powder Coating
- Internal Corrosion Protection
- NEMA 12, 3R & 4 Ratings Maintained (UL50) (4X Optional)
- Phase Sequence/Phase Loss Detector/Under Voltage monitor
- Programmable Temperature Alarm
- Programmable Thermostat
- Stainless Steel Shell (NEMA 4X models)
- UL/CUL Listed

ACCESSORIES AND OPTIONS

	Page
Adapter	86
Enclosure Heater	86
Filter Recoating Adhesive	86
Remote Monitoring	86
Remote Thermostat Relay	86
Replacement Filters	88

c UL us **NEMA** TYPE 12, 3R & 4 MAINTAINED (4X OPTIONAL)

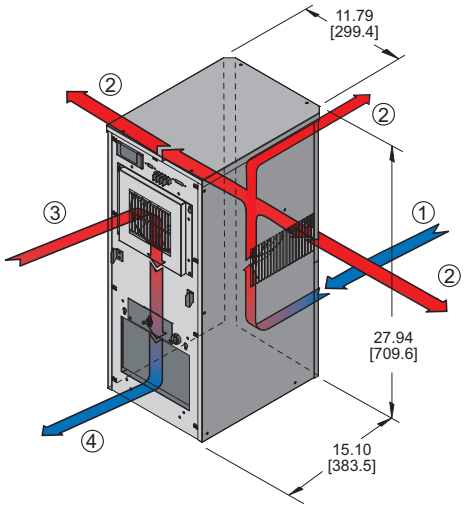

① FILTERED CONDENSER AIR INLET (Ambient Air In)
② CONDENSER OUTLET (Warm Ambient Air Out)
③ WARM AIR RETURN FROM ENCLOSURE
④ COOL AIR OUTLET TO ENCLOSURE

PERFORMANCE CHART

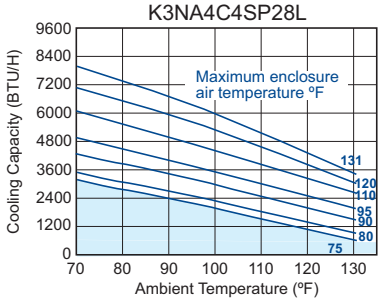

Operation within shaded area not recommended.

Many popular units are available as 3D solid models for customer system integration. Please contact Kooltronic for details.

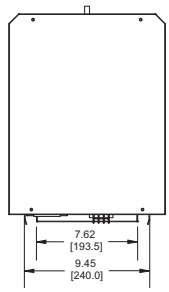

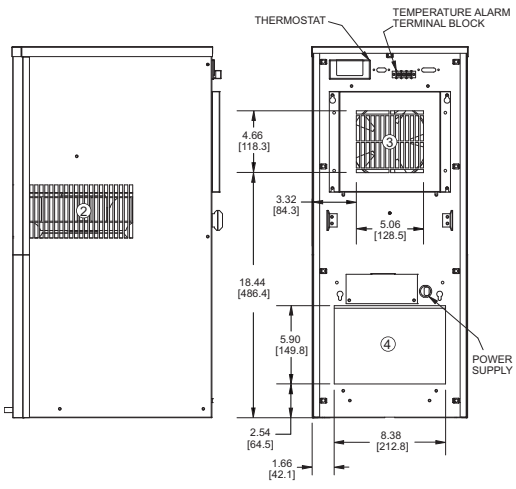

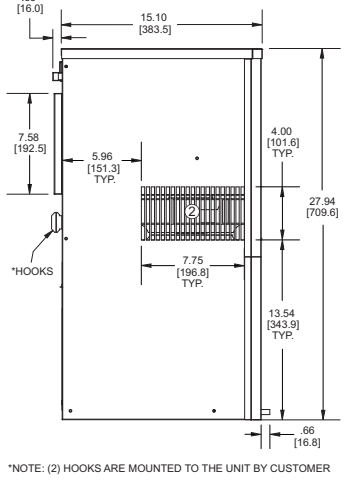

*NOTE: (2) HOOKS ARE MOUNTED TO THE UNIT BY CUSTOMER

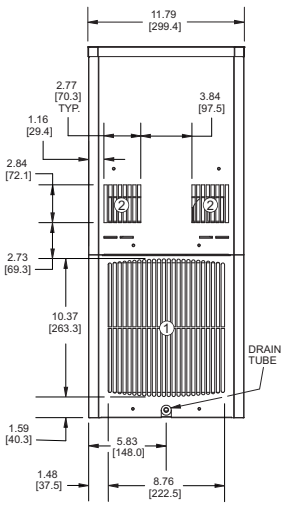

MOUNTING PLAN

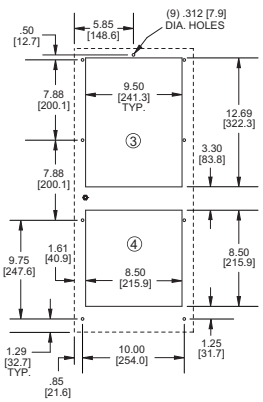

Dimensions, inches [mm], are for reference only and subject to change.

✦ Contact KOOLTRONIC for information.

SLIMKOOL

SLIMKOOL (NARROW WIDTH) SP36
NEMA 4 or 4X AIR CONDITIONERS



c UL us

NEMA
TYPE 12, 3R & 4
MAINTAINED
(4X OPTIONAL)

Model	NEMA Rating	BTU/H Rating	95/95 Rating	Ambient Temp. °F Max./Min.	Ambient Temp. °C Max./Min.	Volts	Hz	* Running Amps	Approx. Weight lbs	Approx. Weight kg
KNA4C6SP36L	4	6000	5600	131/-20	55/-28	115/100	60/50	9.6/9.6	100	45
K2NA4C6SP36L	4	6000	5600	131/-20	55/-28	208/230 200	60/60 50	4.6/4.6 4.2	100	45
KNA4C6SP36LV	4X	6000	5600	131/-20	55/-28	115/100	60/50	9.6/9.6	100	45
K2NA4C6SP36LV	4X	6000	5600	131/-20	55/-28	208/230 200	60/60 50	4.6/4.6 4.2	100	45
KNA4C8SP36L	4	8000	7500	131/-20	55/-28	115/100	60/50	14.4/14.4	100	45
K2NA4C8SP36L	4	8000	7500	131/-20	55/-28	208/230 200	60/60 50	8.0/8.0 7.0	100	45
KNA4C8SP36LV	4X	8000	7500	131/-20	55/-28	115/100	60/50	14.4/14.4	100	45
K2NA4C8SP36LV	4X	8000	7500	131/-20	55/-28	208/230 200	60/60 50	8.0/8.0 7.0	100	45

* Rating shown is for operation at maximum ambient temperature.

STANDARD FEATURES

- Built-in Condensate Evaporator
- CFC-Free Refrigerant
- Closed-Loop Cooling
- Compact Design/Slim Mounting Footprint
- Compressor Short Cycle Protector
- Condenser Impeller Cycling Control
- Epoxy-Coated Evaporator and Condenser Coils
- Filter
- Heavy-duty Galvanized Steel Shell with ANSI 61 Gray Powder Coating
- Internal Corrosion Protection
- NEMA 12, 3R & 4 Ratings Maintained (UL50) (4X Optional)
- Programmable Temperature Alarm
- Programmable Thermostat
- Stainless Steel Shell (NEMA 4X models)
- UL/CUL Listed

Many popular units are available as 3D solid models for customer system integration. Please contact Kooltronic for details.

ACCESSORIES AND OPTIONS

	Page
Adapter	86
Enclosure Heater	86
Filter Recoating Adhesive	86
Remote Monitoring	86
Remote Thermostat Relay	86
Replacement Filters	88

PERFORMANCE CHART

K_NA4C6SP36L

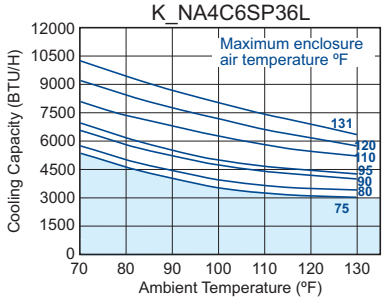

Operation within shaded area not recommended.

PERFORMANCE CHART

K_NA4C8SP36L

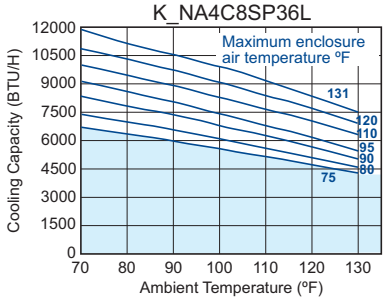

Operation within shaded area not recommended.

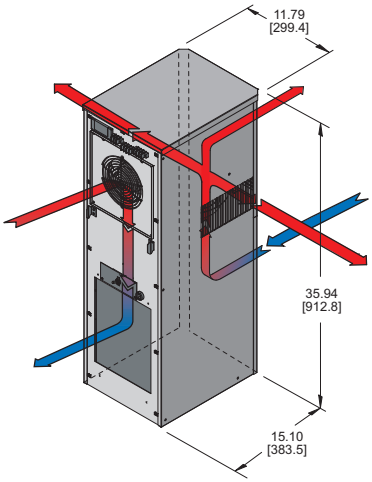

① FILTERED CONDENSER AIR INLET (Ambient Air In)

② CONDENSER OUTLET (Warm Ambient Air Out)

③ WARM AIR RETURN FROM ENCLOSURE

④ COOL AIR OUTLET TO ENCLOSURE

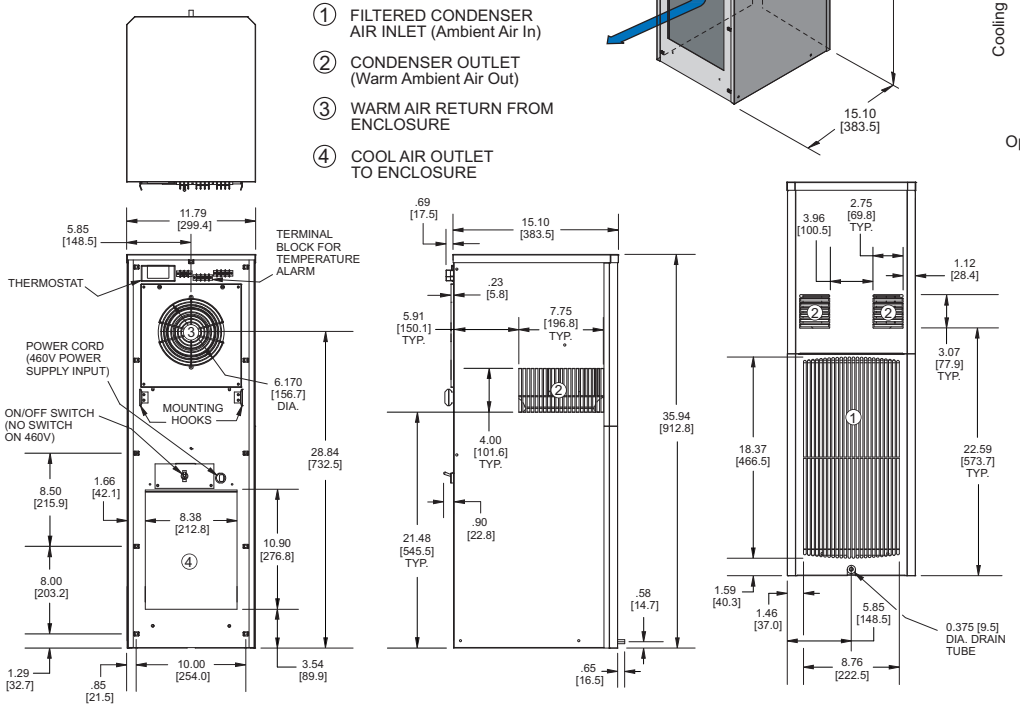

MOUNTING PLAN

Dimensions, inches [mm], are for reference only and subject to change.

✦ Contact KOOLTRONIC for information.

SLIMKOOL SP36 480 VOLT 3-PHASE NEMA 4 or 4X AIR CONDITIONERS

Model	NEMA Rating	BTU/H Rating	95/95 Rating	Ambient Temp. °F Max./Min.	Ambient Temp. °C Max./Min.	Volts	Hz	* Running Amps	Approx. Weight lbs	Approx. Weight kg
K3NA4C6SP36L	4	6000	5600	131/-20	55/-28	480	60	2.2	110	50
K3NA4C6SP36LV	4X	6000	5600	131/-20	55/-28	480	60	2.2	110	50
K3NA4C8SP36L	4	8000	7500	131/-20	55/-28	480	60	2.7	110	50
K3NA4C8SP36LV	4X	8000	7500	131/-20	55/-28	480	60	2.7	110	50

* Rating shown is for operation at maximum ambient temperature.



STANDARD FEATURES

- Built-in Condensate Evaporator
- CFC-Free Refrigerant
- Closed-Loop Cooling
- Compact Design/Slim Mounting Footprint
- Compressor Short Cycle Protector
- Condenser Impeller Cycling Control
- Epoxy-Coated Evaporator and Condenser Coils
- Filter
- Heavy-duty Galvanized Steel Shell with ANSI 61 Gray Polyester Powder Coating
- Internal Corrosion Protection
- NEMA 12, 3R & 4 Ratings Maintained (UL50) (4X Optional)
- Phase Sequence/Phase Loss Detector/Under Voltage Monitor
- Programmable Temperature Alarm
- Programmable Thermostat
- Stainless Steel Shell (NEMA 4X models)
- UL/CUL Listed

ACCESSORIES AND OPTIONS

	Page
Adapter	86
Enclosure Heater	86
Filter Recoating Adhesive	86
Remote Monitoring	86
Remote Thermostat Relay	86
Remote Thermostat Relay	86
Replacement Filters	88

NEMA
TYPE 12, 3R & 4 MAINTAINED (4X OPTIONAL)

c UL us

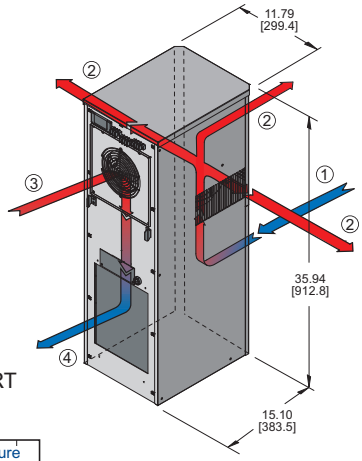

① FILTERED CONDENSER AIR INLET (Ambient Air In)

② CONDENSER OUTLET (Warm Ambient Air Out)

③ WARM AIR RETURN FROM ENCLOSURE

④ COOL AIR OUTLET TO ENCLOSURE

PERFORMANCE CHART

K3NA4C6SP36L

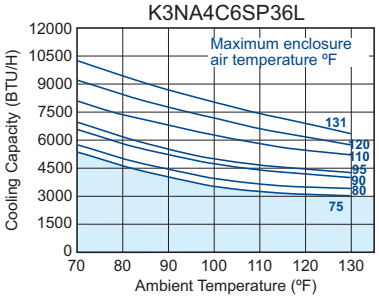

Operation within shaded area not recommended.

PERFORMANCE CHART

K3NA4C8SP36L

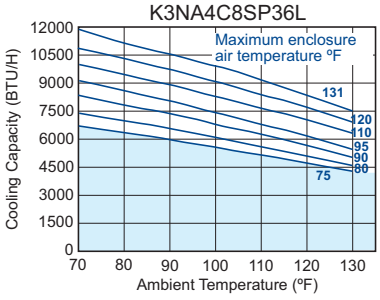

Operation within shaded area not recommended.

Many popular units are available as 3D solid models for customer system integration. Please contact Kooltronic for details.

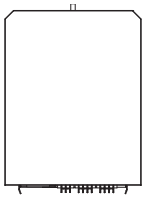

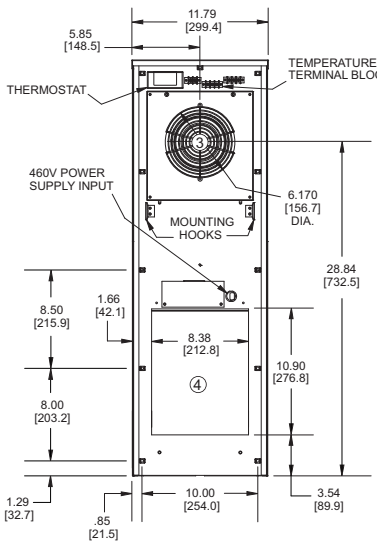

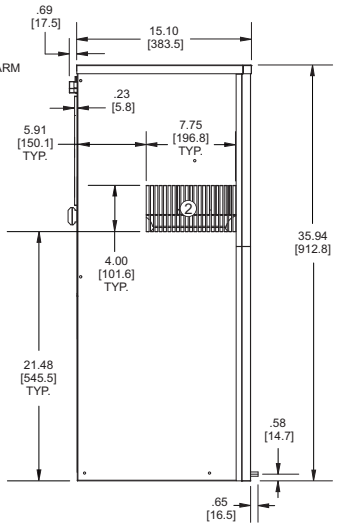

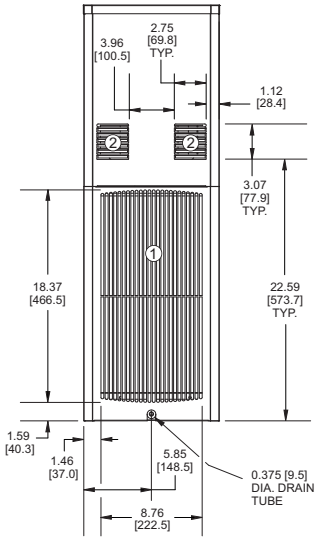

MOUNTING PLAN

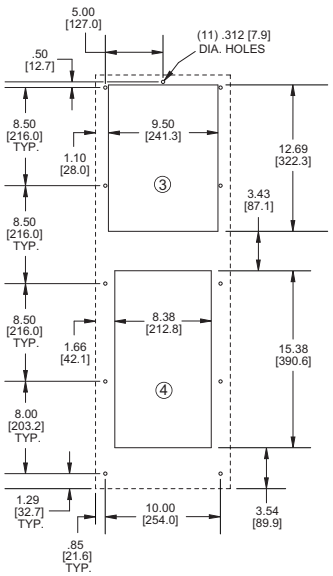

Dimensions, inches [mm], are for reference only and subject to change.

✦ Contact KOOLTRONIC for information.

SLIMKOOL

SLIMKOOL (NARROW WIDTH) SP43
NEMA 4 or 4X AIR CONDITIONERS



Model	NEMA Rating	BTU/H Rating	95/95 Rating	Ambient Temp. °F Max./Min.	Ambient Temp. °C Max./Min.	Volts	Hz	* Running Amps	Approx. Weight lbs	Approx. Weight kg
KNA4C11SP43L	4	11000	9300	131/-20	55/-28	115/100	60/50	20.0/19.5	115	52
K2NA4C11SP43L	4	11000	9300	131/-20	55/-28	208/230 200	60/60 50	11.0/10.0 9.9	115	52
KNA4C11SP43LV	4X	11000	9300	131/-20	55/-28	115/100	60/50	20.0/19.5	115	52
K2NA4C11SP43LV	4X	11000	9300	131/-20	55/-28	208/230 200	60/60 50	11.0/10.0 9.9	115	52

* Rating shown is for operation at maximum ambient temperature.

NEMA
TYPE 12, 3R & 4 MAINTAINED (4X OPTIONAL)

STANDARD FEATURES

- Built-in Condensate Evaporator
- CFC-Free Refrigerant
- Closed-Loop Cooling
- Compact Design/Slim Mounting Footprint
- Compressor Short Cycle Protector
- Condenser Impeller Cycling Control
- Epoxy-Coated Evaporator and Condenser Coils
- Filter
- Heavy-duty Galvanized Steel Shell with ANSI 61 Gray Polyester Powder Coating
- Internal Corrosion Protection
- NEMA 12, 3R & 4 Ratings Maintained (UL50) (4X Optional)
- Programmable Temperature Alarm
- Programmable Thermostat
- Stainless Steel Shell (NEMA 4X models)
- UL/CUL Listed

ACCESSORIES AND OPTIONS

	Page
Adapter	86
Enclosure Heater	86
Filter Recoating Adhesive	86
Remote Monitoring	86
Remote Thermostat Relay	86
Remote Thermostat Relay	86
Replacement Filters	88

Many popular units are available as 3D solid models for customer system integration. Please contact Kooltronic for details.

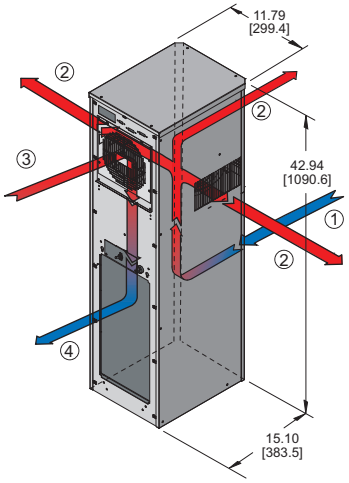

① FILTERED CONDENSER AIR INLET (Ambient Air In)
② CONDENSER OUTLET (Warm Ambient Air Out)
③ WARM AIR RETURN FROM ENCLOSURE
④ COOL AIR OUTLET TO ENCLOSURE

PERFORMANCE CHART

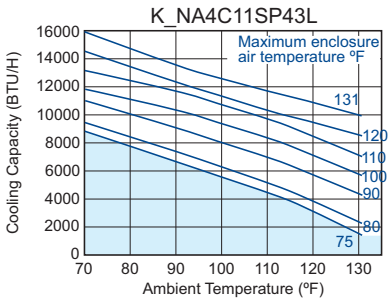

Operation within shaded area not recommended.

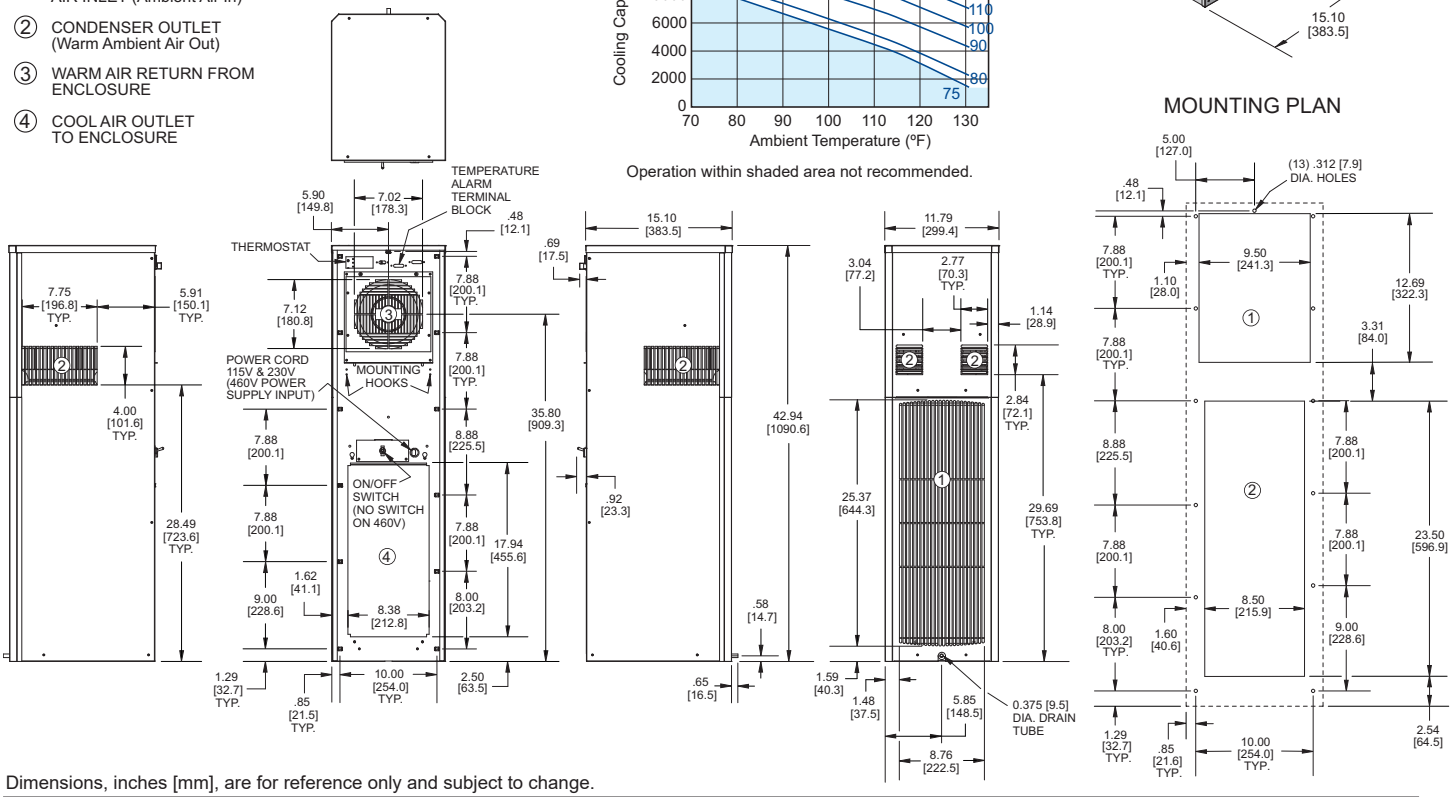

Dimensions, inches [mm], are for reference only and subject to change.

✦ Contact KOOLTRONIC for information.

SLIMKOOL

SLIMKOOL SP43 480 VOLT 3-PHASE NEMA 4 or 4X AIR CONDITIONERS

Model	NEMA Rating	BTU/H Rating	95/95 Rating	Ambient Temp. °F Max./Min.	Ambient Temp. °C Max./Min.	Volts	Hz	* Running Amps	Approx. Weight lbs	Approx. Weight kg
K3NA4C11SP43L	4	11000	9300	131/-20	55/-28	480	60	3.5	125	57
K3NA4C11SP43LV	4X	11000	9300	131/-20	55/-28	480	60	3.5	125	57

* Rating shown is for operation at maximum ambient temperature.



NEMA
TYPE 12, 3R & 4 MAINTAINED (4X OPTIONAL)

c UL us

STANDARD FEATURES

- Built-in Condensate Evaporator
- CFC-Free Refrigerant
- Closed-Loop Cooling
- Compact Design/Slim Mounting Footprint
- Compressor Short Cycle Protector
- Condenser Impeller Cycling Control
- Epoxy-Coated Evaporator and Condenser Coils
- Filter
- Heavy-duty Galvanized Steel Shell with ANSI 61 Gray Powder Coating
- Internal Corrosion Protection
- NEMA 12, 3R & 4 Ratings Maintained
- Phase Sequence/Phase Loss Detector/Under Voltage Monitor
- Programmable Temperature Alarm
- Programmable Thermostat
- Stainless Steel Shell (NEMA 4X models)
- UL/CUL Listed

ACCESSORIES AND OPTIONS

	Page
Adapter	86
Enclosure Heater	86
Filter Recoating Adhesive	86
Remote Monitoring	86
Remote Thermostat Relay	86
Replacement Filters	88

Many popular units are available as 3D solid models for customer system integration. Please contact Kooltronic for details.

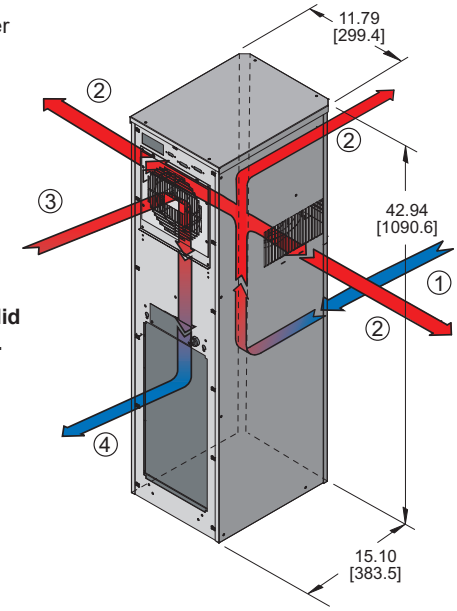

① FILTERED CONDENSER AIR INLET (Ambient Air In)
② CONDENSER OUTLET (Warm Ambient Air Out)
③ WARM AIR RETURN FROM ENCLOSURE
④ COOL AIR OUTLET TO ENCLOSURE

PERFORMANCE CHART

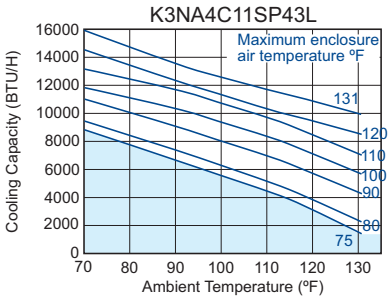

Operation within shaded area not recommended.

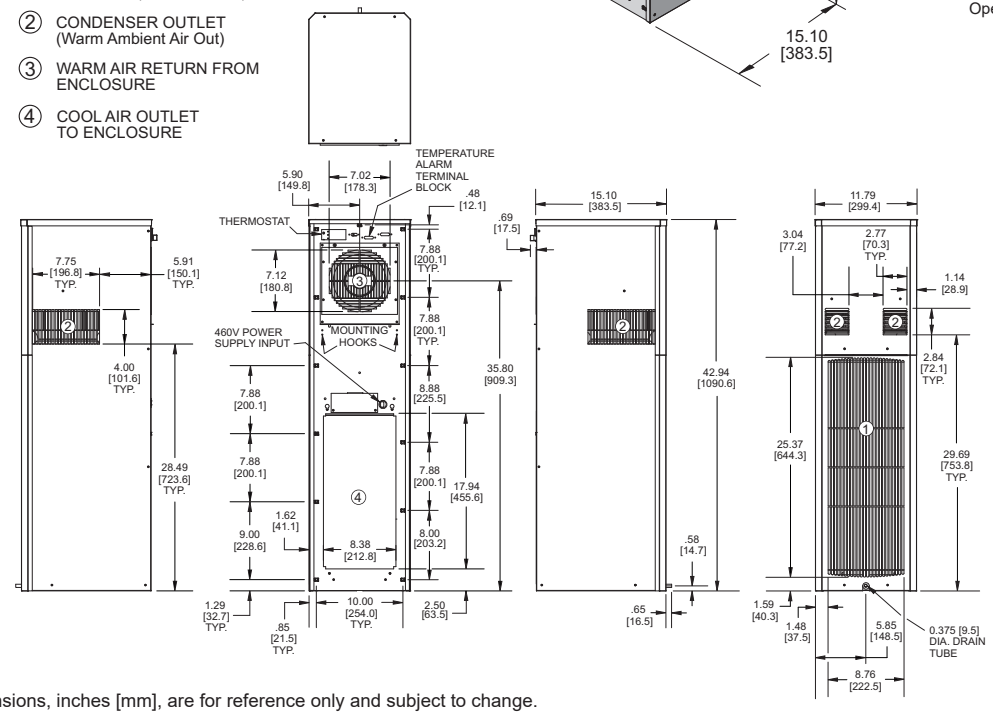

MOUNTING PLAN

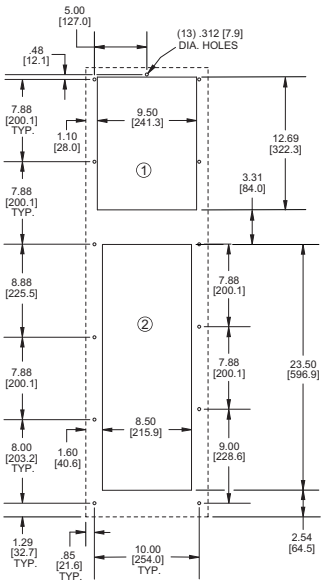

Dimensions, inches [mm], are for reference only and subject to change.

✦ Contact KOOLTRONIC for information.

SLIMKOOL

HAZARDOUS LOCATION 4/4X AIR CONDITIONERS

DESCRIPTION

Kooltronic, Inc. is proud to announce that its **Hazardous Location (HL) Series** line of air conditioners has been granted a patent by the U.S. Patent & Trademark Office (U.S. Patent No. 9, 157, 670 B2). All electrical components are located in a sealed, pressurized compartment, representing a major advance in safety and reliability. This design utilizes the electrical enclosure's existing purge system, and allows for general purpose components to be used, reducing both initial and service costs. The characteristics of these units are:

- All models UL Listed per UL 484, Special Purpose Air Conditioners
- All models UL Recognized per NFPA 496: 2013, Purged and Pressurized Enclosures for Electrical Equipment
- Meets NEC Class I, Division 1, Groups A, B, C & D and Class I, Zone 1, Groups IIA, IIB plus hydrogen and IIC Hazardous Locations when used with an approved Type X Purge System on the electrical enclosure
- Meets NEC Class I, Division 2, Groups A, B, C & D and Class I, Zone 2, Groups IIA, IIB plus hydrogen and IIC Hazardous Locations when used with an approved Type Z Purge System on the electrical enclosure
- All models are designed to withstand shock and vibration in two different planes for a minimum of 4 hours per plane at 1G acceleration
- Temperature Classification is T-4, 275°F/135°C
- Maintains NEMA Type 12, 3R & 4/4X Ratings per UL50, Cabinets and Boxes.

The **Hazardous Location Series** offers capacities up to 24,000 BTU/H in single and 3-phase power. Many features, such as a programmable thermostat, compressor short cycle protector and Hi/Lo temperature alarm are standard. These units are offered at a lower cost and are easily maintained when compared to traditionally designed hazardous location units.
Typical applications include oil refineries, paint and varnish manufacturing plants, petrochemical sites and hazardous materials storage facilities. These stainless steel units are used where hazardous gases may be present and are also suitable for corrosive environments. General specifications common to all KOOLTRONIC Air Conditioners are on the first page of this section.

KOOLTRONIC also designs and manufactures a variety of air conditioners to meet *unique* specifications. We invite your inquiries about our modification and custom-design capabilities.

CALL 1-800-321-KOOL (5665)
or FAX 609-466-1114



NEMA TYPE 12, 3R AND 4/4X MAINTAINED

U.S. Patent No. 9,157,670 B2

Many popular units are available as 3D solid models for customer system integration. Please contact Kooltronic for details.

KOOLTRONIC IS PLEASED TO ANNOUNCE THE HAZARDOUS LOCATION SERIES AS THE WINNER OF THE BRONZE AWARD IN MAJOR APPLIANCES AND HVAC CATAGORY - APPLIANCE DESIGN MAGAZINE'S 28TH ANNUAL EXCELLENCE IN DESIGN AWARD COMPETITION.

STANDARD FEATURES

- All models UL/CUL Listed and Recognized
- Closed-Loop Cooling
- Compressor Short Cycle Protector
- Internal Corrosion Protection
- Maintains NEMA 12, 3R, 4 & 4X Ratings (UL50)
- Painted Condenser and Evaporator Coils
- Programmable Temperature Alarm
- Programmable Thermostat
- Shock and Vibration Resistance
- Stainless Steel Shell
- Zero ODP Refrigerant

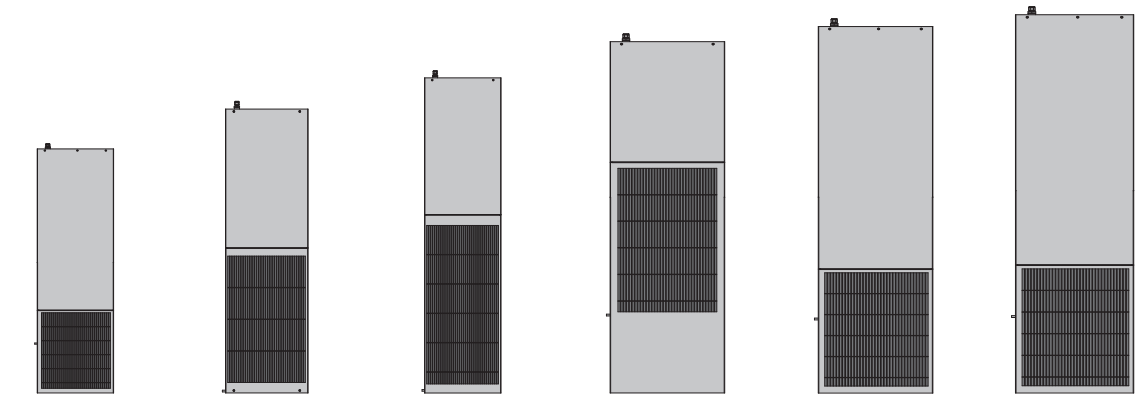

HL28LV 3,000 BTU/H 28"H x 12"W x 19"D

HL40LV 6,000 BTU/H 40"H x 12"W x 16"D

HL48LV 9,000 BTU/H 48"H x 12"W x 16"D

HL56LV 12,000 BTU/H 56"H x 16"W x 21"D

HL58LV 18,000 BTU/H 58"H x 20"W x 21"D

HL60LV 24,000 BTU/H 60"H x 24"W x 22"D

HAZARDOUS LOCATION HL28LV (115/230 VOLT) 4/4X AIR CONDITIONERS

Model	NEMA Rating	BTU/H Rating	95/95 Rating	Ambient Temp. °F Max./Min.	Ambient Temp. °C Max./Min.	Volts	Hz	* Running Amps 125ºF/125ºF	Pressurized Compartment Volume cu. ft.	Air Leakage @ 0.25 i.w.g. Pressure CFM	Approx. Weight lbs	kg
KA4C3HL28LV	4/4X	3000	3422	141/-20	61/-28	115	60	12.8	2.4	0.1	90	41
KA4C3HL28LV	4/4X	3000	3422	141/-20	61/-28	115/100	50	10.6/12.1	2.4	0.1	90	41
K2A4C3HL28LV	4/4X	3000	3475	141/-20	61/-28	230/208	60	5.3/6.0	2.4	0.1	90	41
K2A4C3HL28LV	4/4X	3000	3475	141/-20	61/-28	230/208	50	4.9/5.0	2.4	0.1	90	41

* Rating shown is for operation at maximum ambient temperature.

STANDARD FEATURES

- All models UL Listed per UL 484, Special Purpose Air Conditioners
- All models UL Recognized per NFPA 496: 2013, Purged and Pressurized Enclosures for Electrical Equipment
- Meets NEC Class I Division 1, Groups A, B, C & D and Class I, Zone 1 Groups IIA, IIB plus hydrogen and IIC Hazardous Locations when used with an approved Type X Purge System on the electrical enclosure
- Meets NEC Class I Division 2, Groups A, B, C & D and Class I, Zone 2 Groups IIA, IIB plus hydrogen and IIC Hazardous Locations when used with an approved Type Z Purge System on the electrical enclosure
- Temperature Classification is T-4, 275 ºF/135 ºC
- Maintains NEMA Type 12, 3R, & 4/4X Ratings per UL 50, Cabinets and Boxes
- Closed-Loop Cooling
- Compressor Short Cycle Protector
- Filter
- Interior and Exterior Purge Connections
- Internal Corrosion Protection
- Painted Condenser and Evaporator coils
- Programmable Temperature Alarm
- Programmable Thermostat
- Shock and Vibration Resistance
- Stainless Steel Shell
- Zero ODP Refrigerant

ACCESSORIES AND OPTIONS

	Page
Enclosure Heater	86
Filter Recoating Adhesive	86
Remote Monitoring	86
Remote Thermostat Relay	86
Replacement Filters	88



NEMA TYPE 12, 3R AND 4/4X MAINTAINED

U.S. Patent No. 9,157,670 B2

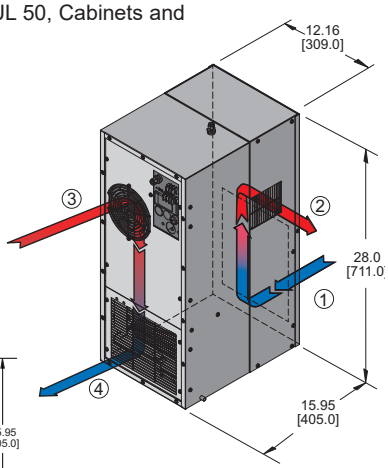

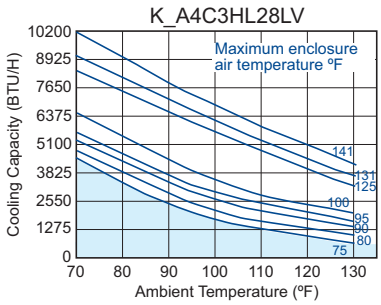

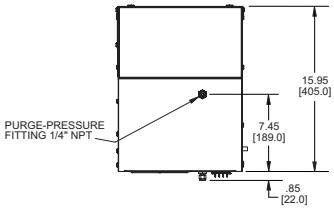

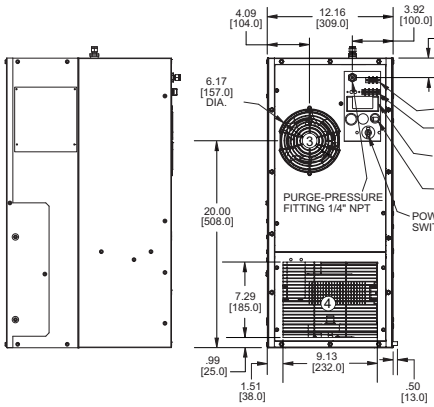

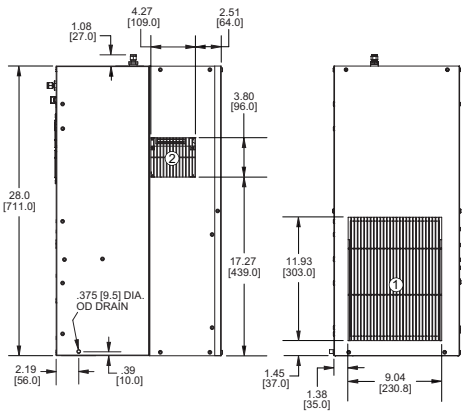

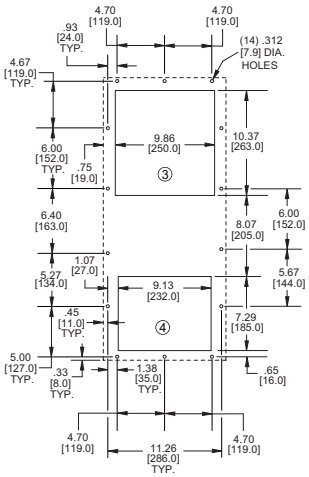

MOUNTING PLAN

Many popular units are available as 3D solid models for customer system integration. Please contact Kooltronic for details.

① FILTERED CONDENSER AIR INLET (Ambient Air In)

② CONDENSER OUTLET (Warm Ambient Air Out)

③ WARM AIR RETURN FROM ENCLOSURE

④ COOL AIR OUTLET TO ENCLOSURE

Dimensions, inches [mm], are for reference only and subject to change.

✦ Contact KOOLTRONIC for information.

HAZARDOUS LOCATION HL40LV 4/4X AIR CONDITIONERS

Model	NEMA Rating	BTU/H Rating	95/95 Rating	Ambient Temp. ºF Max./Min.	Ambient Temp. ºC Max./Min.	Volts	Hz	* Running Amps 125ºF/125ºF	Pressurized Compartment Volume cu. ft.	Air Leakage @ 0.25 i.w.g. Pressure CFM	Approx. Weight lbs	Approx. Weight kg
KA6C6HL40LV	4/4X	6000	5770	125/-20	52/-28	115	60	12.2	2.4	0.1	112	51
K2A6C6HL40LV	4/4X	6000	5770	125/-20	52/-28	208/230	60	7.5/6.5	2.4	0.1	112	51
K2A6C6HL40LV	4/4X	6000	5770	125/-20	52/-28	230	50	6.5	2.4	0.1	112	51

* Rating shown is for operation at maximum ambient temperature.



NEMA TYPE 12, 3R AND 4/4X MAINTAINED

U.S. Patent No. 9,157,670 B2

STANDARD FEATURES

- All models UL Listed per UL 484, Special Purpose Air Conditioners
- All models UL Recognized per NFPA 496: 2013, Purged and Pressurized Enclosures for Electrical Equipment
- Meets NEC Class I Division 1, Groups A, B, C & D and Class I, Zone 1 Groups IIA, IIB plus hydrogen and IIC Hazardous Locations when used with an approved Type X Purge System on the electrical enclosure
- Meets NEC Class I Division 2, Groups A, B, C & D and Class I, Zone 2 Groups IIA, IIB plus hydrogen and IIC Hazardous Locations when used with an approved Type Z Purge System on the electrical enclosure
- Temperature Classification is T-4, 275 ºF/135 ºC
- Maintains NEMA Type 12, 3R, & 4/4X Ratings per UL 50, Cabinets and Boxes
- Closed-Loop Cooling
- Compressor Short Cycle Protector
- Filter
- Interior and Exterior Purge Connections
- Internal Corrosion Protection
- Painted Condenser and Evaporator coils
- Programmable Temperature Alarm
- Programmable Thermostat
- Shock and Vibration Resistance
- Stainless Steel Shell
- Zero ODP Refrigerant

ACCESSORIES AND OPTIONS

	Page
Enclosure Heater	86
Filter Recoating Adhesive	86
Remote Monitoring	86
Remote Thermostat Relay	86
Replacement Filters	88

PERFORMANCE CHART

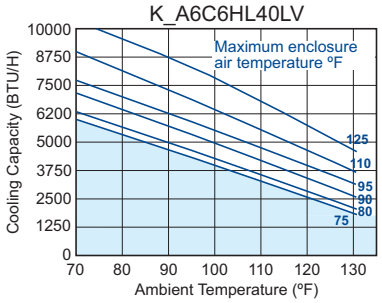

Operation within shaded area not recommended.

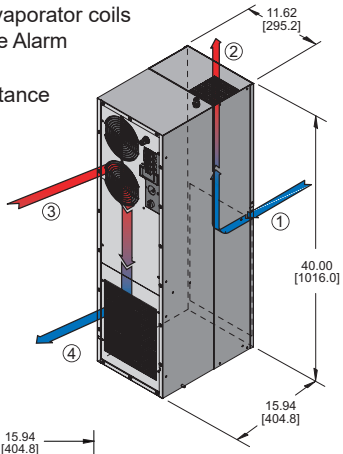

① FILTERED CONDENSER AIR INLET (Ambient Air In)
② CONDENSER OUTLET (Warm Ambient Air Out)
③ WARM AIR RETURN FROM ENCLOSURE
④ COOL AIR OUTLET TO ENCLOSURE

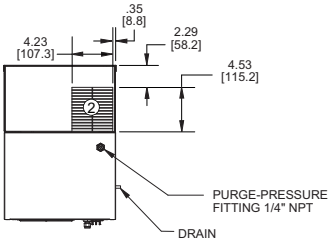

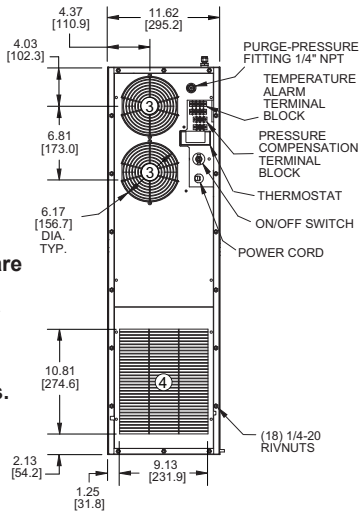

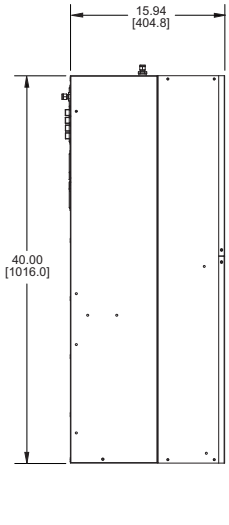

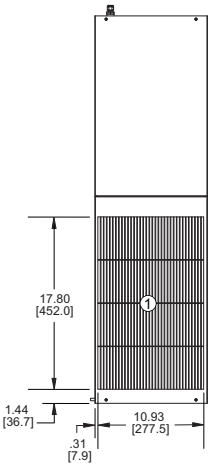

Many popular units are available as 3D solid models for customer system integration. Please contact Kooltronic for details.

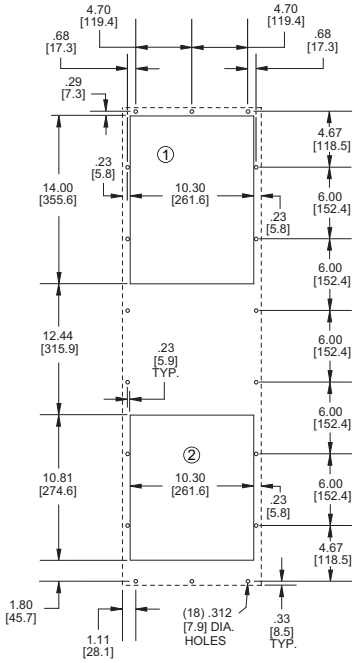

MOUNTING PLAN

Dimensions, inches [mm], are for reference only and subject to change.

✦ Contact KOOLTRONIC for information.

HAZARDOUS LOCATION HL48
4/4X AIR CONDITIONERS

Model	NEMA Rating	BTU/H Rating	95/95 Rating	Ambient Temp. °F Max./Min.	Ambient Temp. °C Max./Min.	Volts	Hz	* Running Amps 125°F/125°F	Pressurized Compartment Volume cu. ft.	Air Leakage @ 0.25 i.w.g. Pressure CFM	Approx. Weight lbs	Approx. Weight kg
KA6C9HL48LV	4/4X	9000	8000	125/-20	52/-28	115	60	18.0	3.0	0.1	122	55
K2A6C9HL48LV	4/4X	9000	8000	125/-20	52/-28	208/230	60	10.0/9.0	3.0	0.1	122	55
K2A6C9HL48LV	4/4X	9000	8000	125/-20	52/-28	230	50	9.0	3.0	0.1	122	55

* Rating shown is for operation at maximum ambient temperature.

STANDARD FEATURES

- All models UL Listed per UL 484, Special Purpose Air Conditioners
- All models UL Recognized per NFPA 496: 2013, Purged and Pressurized Enclosures for Electrical Equipment
- Meets NEC Class I Division 1, Groups A, B, C & D and Class I, Zone 1 Groups IIA, IIB plus hydrogen and IIC Hazardous Locations when used with an approved Type X Purge System on the electrical enclosure
- Meets NEC Class I Division 2, Groups A, B, C & D and Class I, Zone 2 Groups IIA, IIB plus hydrogen and IIC Hazardous Locations when used with an approved Type Z Purge System on the electrical enclosure
- Temperature Classification is T-4, 275 °F/135 °C
- Maintains NEMA Type 12, 3R, & 4/4X Ratings per UL 50, Cabinets and Boxes
- Closed-Loop Cooling
- Compressor Short Cycle Protector
- Filter
- Interior and Exterior Purge Connections
- Internal Corrosion Protection
- Painted Condenser and Evaporator coils
- Programmable Temperature Alarm
- Programmable Thermostat
- Shock and Vibration Resistance
- Stainless Steel Shell
- Zero ODP Refrigerant

ACCESSORIES AND OPTIONS

	Page
Enclosure Heater	86
Filter Recoating Adhesive	86
Remote Monitoring	86
Remote Thermostat Relay	86
Replacement Filters	88

NEMA
TYPE 12, 3R AND 4/4X MAINTAINED



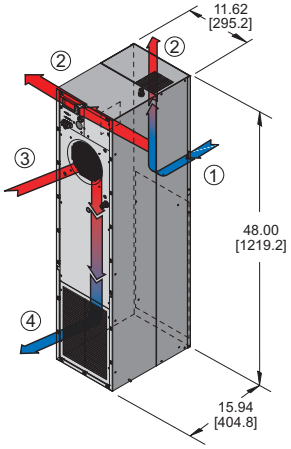

U.S. Patent No. 9,157,670 B2

PERFORMANCE CHART

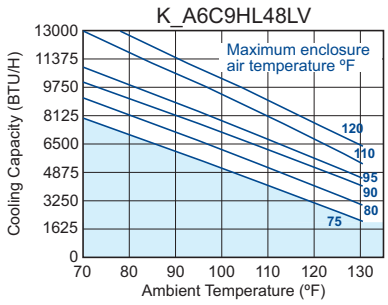

Operation within shaded area not recommended.

Many popular units are available as 3D solid models for customer system integration. Please contact Kooltronic for details.

① FILTERED CONDENSER AIR INLET (Ambient Air In)

② CONDENSER OUTLET (Warm Ambient Air Out)

③ WARM AIR RETURN FROM ENCLOSURE

④ COOL AIR OUTLET TO ENCLOSURE

MOUNTING PLAN

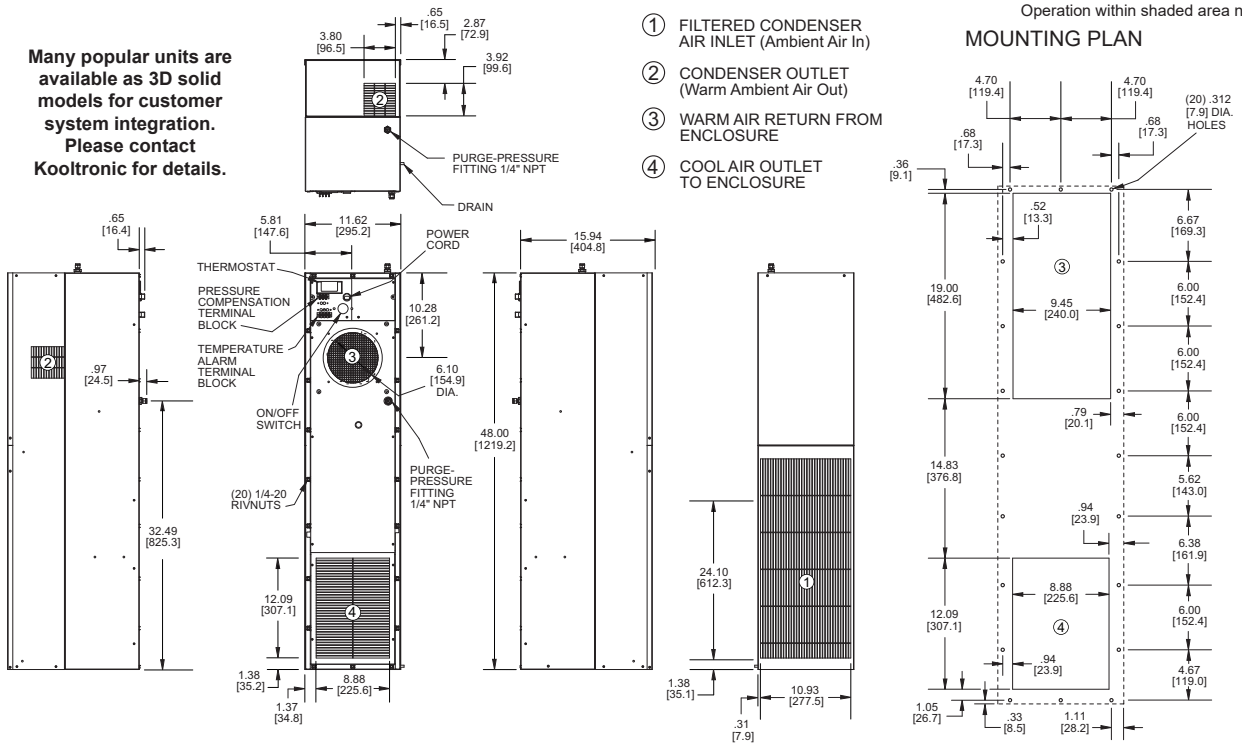

Dimensions, inches [mm], are for reference only and subject to change.

✦ Contact KOOLTRONIC for information.

HAZARDOUS LOCATION HL56LV 480 VOLT 3-PHASE NEMA 4/4X AIR CONDITIONERS

Model	NEMA Rating	BTU/H Rating	95/95 Rating	Ambient Temp. ºF Max./Min.	Ambient Temp. ºC Max./Min.	Volts	Hz	* Running Amps 125ºF/125ºF	Pressurized Compartment Volume cu. ft.	Air Leakage @ 0.25 i.w.g. Pressure CFM	Approx. Weight lbs kg
K3A6C12HL56LV	4/4X	12000	10940	125/-20	52/-28	480	60	6.0	10.8	0.4	237 108

* Rating shown is for operation at maximum ambient temperature.



c UL us

c UL us

NEMA
TYPE 12, 3R AND 4/4X MAINTAINED

U.S. Patent No. 9,157,670 B2

STANDARD FEATURES

- All models UL Listed per UL 484, Special Purpose Air Conditioners
- All models UL Recognized per NFPA 496: 2013, Purged and Pressurized Enclosures for Electrical Equipment
- Meets NEC Class I Division 1, Groups A, B, C & D and Class I, Zone 1 Groups IIA, IIB plus hydrogen and IIC Hazardous Locations when used with an approved Type X Purge System on the electrical enclosure
- Meets NEC Class I Division 2, Groups A, B, C & D and Class I, Zone 2 Groups IIA, IIB plus hydrogen and IIC Hazardous Locations when used with an approved Type Z Purge System on the electrical enclosure
- Temperature Classification is T-4, 275 ºF/135 ºC
- Maintains NEMA Type 12, 3R, & 4/4X Ratings per UL 50, Cabinets and Boxes
- Closed-Loop Cooling
- Compressor Short Cycle Protector
- Filter
- Interior and Exterior Purge Connections
- Internal Corrosion Protection
- Painted Condenser and Evaporator coils
- Programmable Temperature Alarm
- Programmable Thermostat
- Shock and Vibration Resistance
- Stainless Steel Shell
- Zero ODP Refrigerant

ACCESSORIES AND OPTIONS

	Page
Enclosure Heater	86
Filter Recoating Adhesive	86
Lead-Lag Controller	86
Remote Thermostat Relay	86
Replacement Filters	88

PERFORMANCE CHART

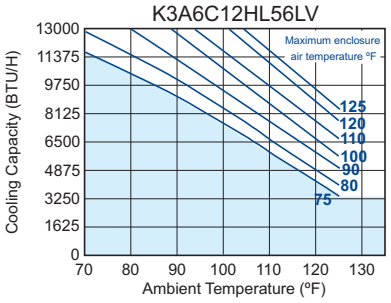

Operation within shaded area not recommended.

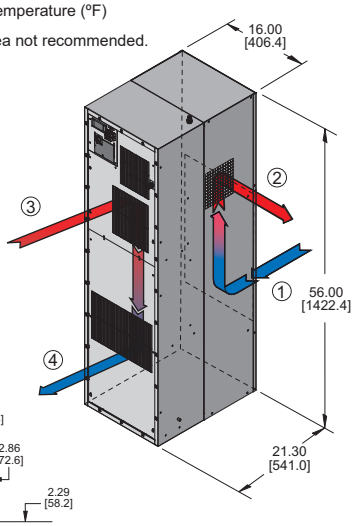

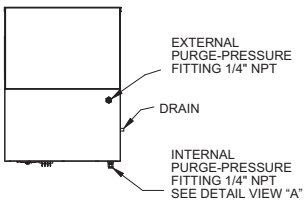

① FILTERED CONDENSER AIR INLET (Ambient Air In)
② CONDENSER OUTLET (Warm Ambient Air Out)
③ WARM AIR RETURN FROM ENCLOSURE
④ COOL AIR OUTLET TO ENCLOSURE

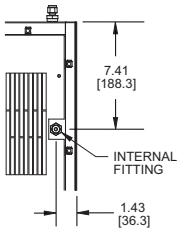

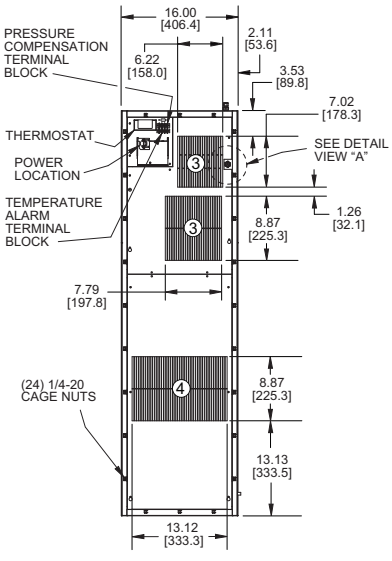

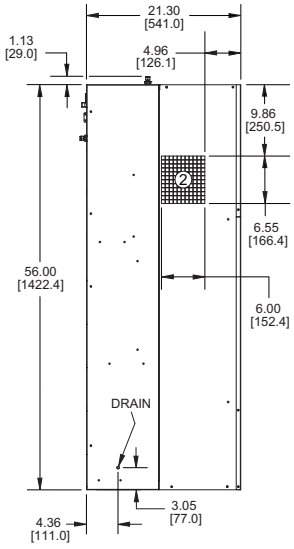

DETAIL VIEW "A"

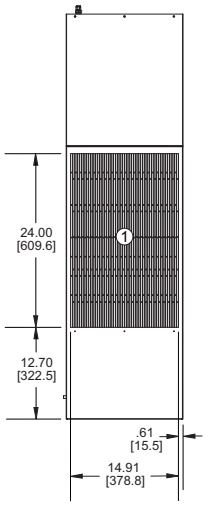

MOUNTING PLAN

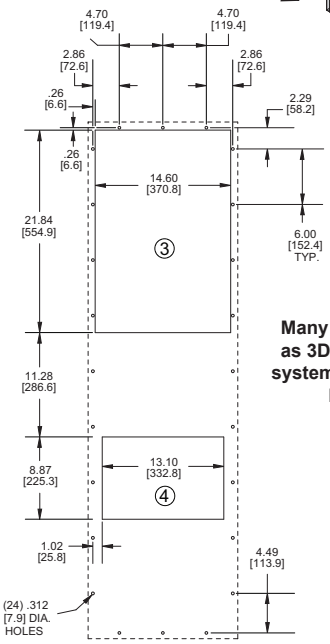

Many popular units are available as 3D solid models for customer system integration. Please contact Kooltronic for details.

Dimensions, inches [mm], are for reference only and subject to change.

✦ Contact KOOLTRONIC for information.

HAZARDOUS LOCATION

HAZARDOUS LOCATION HL58LV
480 VOLT 3-PHASE NEMA 4/4X AIR CONDITIONERS

Model	NEMA Rating	BTU/H Rating	95/95 Rating	Ambient Temp. °F Max./Min.	Ambient Temp. °C Max./Min.	Volts	Hz	* Running Amps 125ºF/125ºF	Pressurized Compartment Volume cu. ft.	Air Leakage @ 0.25 i.w.g. Pressure CFM	Approx. Weight lbs	Approx. Weight kg
K3A4C18HL58LV	4/4X	18000	16400	125/-20	52/-28	480	60	6.0	7.7	0.36	294	133

* Rating shown is for operation at maximum ambient temperature.

STANDARD FEATURES

- All models UL Listed per UL 484, Special Purpose Air Conditioners
- All models UL Recognized per NFPA 496: 2013, Purged and Pressurized Enclosures for Electrical Equipment
- Meets NEC Class I Division 1, Groups A, B, C & D and Class I, Zone 1 Groups IIA, IIB plus hydrogen and IIC Hazardous Locations when used with an approved Type X Purge System on the electrical enclosure
- Meets NEC Class I Division 2, Groups A, B, C & D and Class I, Zone 2 Groups IIA, IIB plus hydrogen and IIC Hazardous Locations when used with an approved Type Z Purge System on the electrical enclosure
- Temperature Classification is T-4, 275 ºF/135 ºC
- Maintains NEMA Type 12, 3R, & 4/4X Ratings per UL 50, Cabinets and Boxes
- Closed-Loop Cooling
- Compressor Short Cycle Protector
- Filter
- Interior and Exterior Purge Connections
- Internal Corrosion Protection
- Painted Condenser and Evaporator coils
- Programmable Temperature Alarm
- Programmable Thermostat
- Shock and Vibration Resistance
- Stainless Steel Shell
- Zero ODP Refrigerant

ACCESSORIES AND OPTIONS

	Page
Enclosure Heater	86
Filter Recoating Adhesive	86
Remote Monitoring	86
Remote Thermostat Relay	86
Replacement Filters	88

NEMA TYPE 12, 3R AND 4/4X MAINTAINED



PERFORMANCE CHART

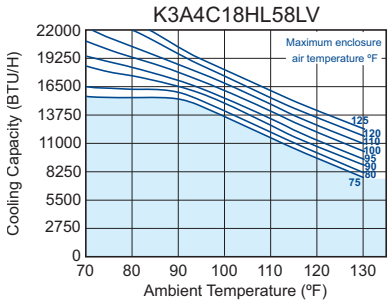

Operation within shaded area not recommended.

U.S. Patent No. 9,157,670 B2

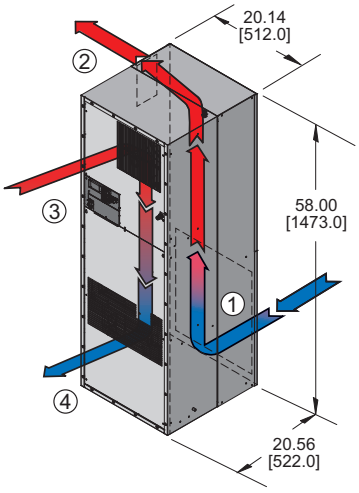

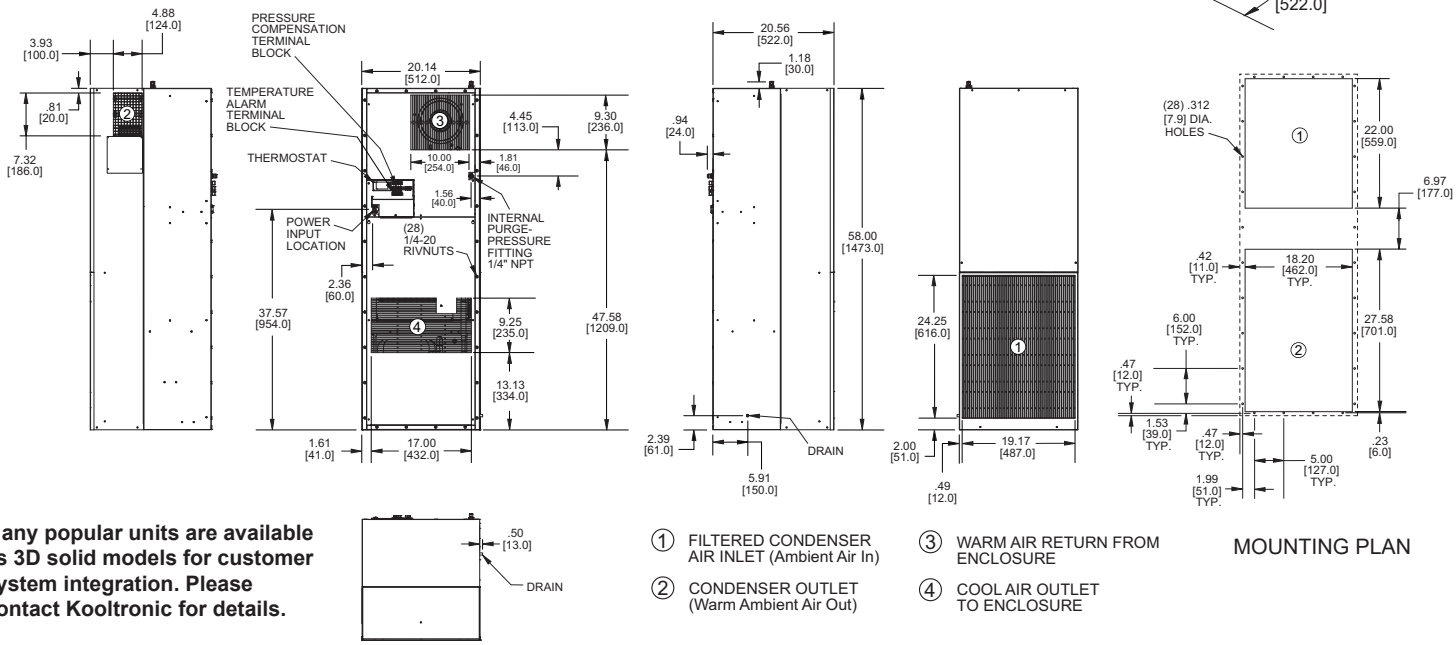

Many popular units are available as 3D solid models for customer system integration. Please contact Kooltronic for details.

① FILTERED CONDENSER AIR INLET (Ambient Air In)
② CONDENSER OUTLET (Warm Ambient Air Out)
③ WARM AIR RETURN FROM ENCLOSURE
④ COOL AIR OUTLET TO ENCLOSURE

MOUNTING PLAN

Dimensions, inches [mm], are for reference only and subject to change.

✦ Contact KOOLTRONIC for information.

HAZARDOUS LOCATION HL60LV
480 VOLT 3-PHASE NEMA 4/4X AIR CONDITIONERS

Model	NEMA Rating	BTU/H Rating	95/95 Rating	Ambient Temp. ºF Max./Min.	Ambient Temp. ºC Max./Min.	Volts	Hz	* Running Amps 125ºF/125ºF	Pressurized Compartment Volume cu. ft.	Air Leakage @ 0.25 i.w.g. Pressure CFM	Approx. Weight lbs	Approx. Weight kg
K3A6C24HL60LV	4/4X	24000	21600	125/-20	52/-28	480	60	10.0	18.0	0.4	328	149

* Rating shown is for operation at maximum ambient temperature.



NEMA TYPE 12, 3R AND 4/4X MAINTAINED

U.S. Patent No. 9,157,670 B2

STANDARD FEATURES

- All models UL Listed per UL 484, Special Purpose Air Conditioners
- All models UL Recognized per NFPA 496: 2013, Purged and Pressurized Enclosures for Electrical Equipment
- Meets NEC Class I Division 1, Groups A, B, C & D and Class I, Zone 1 Groups IIA, IIB plus hydrogen and IIC Hazardous Locations when used with an approved Type X Purge System on the electrical enclosure
- Meets NEC Class I Division 2, Groups A, B, C & D and Class I, Zone 2 Groups IIA, IIB plus hydrogen and IIC Hazardous Locations when used with an approved Type Z Purge System on the electrical enclosure
- Temperature Classification is T-4, 275 ºF/135 ºC
- Maintains NEMA Type 12, 3R, & 4/4X Ratings per UL 50, Cabinets and Boxes
- Closed-Loop Cooling
- Compressor Short Cycle Protector
- Filter
- Interior and Exterior Purge Connections
- Internal Corrosion Protection
- Painted Condenser and Evaporator coils
- Programmable Temperature Alarm
- Programmable Thermostat
- Shock and Vibration Resistance
- Stainless Steel Shell
- Zero ODP Refrigerant

ACCESSORIES AND OPTIONS

	Page
Enclosure Heater	86
Filter Recoating Adhesive	86
Remote Monitoring	86
Remote Thermostat Relay	86
Replacement Filters	88

PERFORMANCE CHART

K3A6C24HL60LV

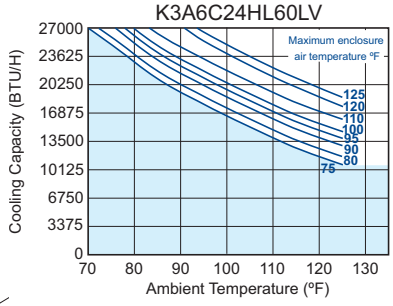

Operation within shaded area not recommended.

① FILTERED CONDENSER AIR INLET (Ambient Air In)

② CONDENSER OUTLET (Warm Ambient Air Out)

③ WARM AIR RETURN FROM ENCLOSURE

④ COOL AIR OUTLET TO ENCLOSURE

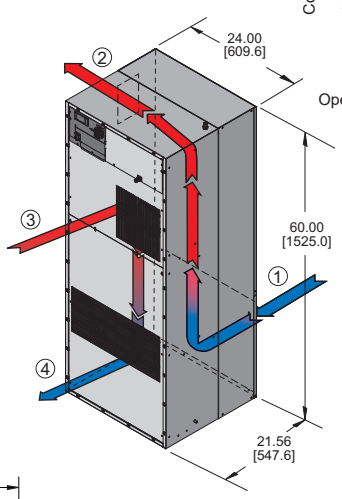

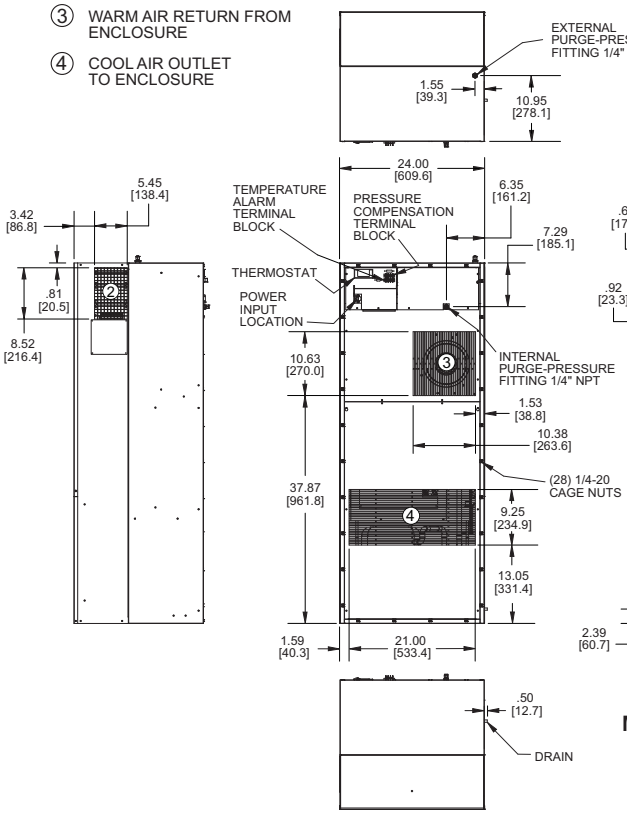

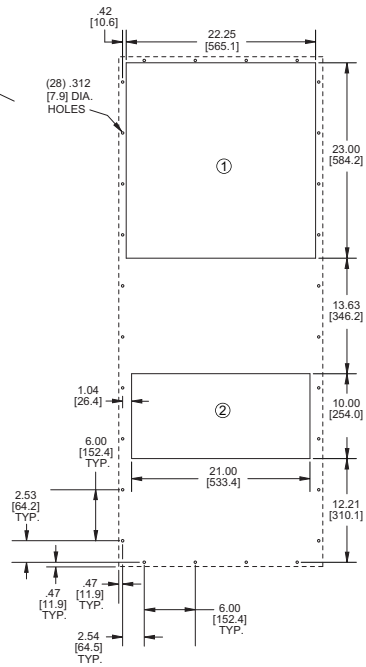

MOUNTING PLAN

Many popular units are available as 3D solid models for customer system integration. Please contact Kooltronic for details.

Dimensions, inches [mm], are for reference only and subject to change.

✦ Contact KOOLTRONIC for information.

PROFILE AIR-COOLED INTERNAL/EXTERNAL MOUNT AIR CONDITIONERS

DESCRIPTION

The ***Profile Series*** Air Conditioners are designed specifically for cooling electronic enclosures and can be used for both indoor and outdoor applications. Engineered to be mounted either outside or inside of an enclosure, the ***Profile Series*** Air Conditioners are the first Kooltronic models to offer this degree of flexibility.

The narrow depth of the ***Profile Series*** allows the option of internal mounting, making the units virtually tamper-proof. The features engineered into these units make them a tamper-resistant choice for external applications. Combined with NEMA 12 & 3R Ratings, with all models UL/CUL Listed, the ***Profile Series*** is an excellent choice for telecommunications or other outdoor cabinet applications.

In addition to the list of standard features, these ***Profile Series*** models are also available with a wide range of accessories and options including a compressor short-cycle protector and temperature alarm. The ***Profile Series DP17 & DP21*** feature a Programmable Thermostat as a Standard Feature.

KOOLTRONIC also designs and manufactures a variety of air conditioners to meet *unique* specifications. We invite your inquiries about our modification and custom-design capabilities.

CALL 1-800-321-KOOL (5665)
or FAX 609-466-1114



c UL us NEMA TYPE 12 & 3R MAINTAINED

PROFILE

Products in red are legacy products. Legacy products are no longer in normal production. Consult factory for availability.

Recommended replacement: See *Guardian/GuardianX Series*

Many popular units are available as 3D solid models for customer system integration. Please contact Kooltronic for details.

STANDARD FEATURES

- 2 Models Mount Internally or Externally
- All Models UL/CUL Listed
- Baked Powder Finish
- Built-in Condensate Evaporator
- CFC-Free Refrigerant
- Closed-Loop Cooling
- Epoxy-Coated Condenser Coil
- Heavy-duty Steel Shell
- NEMA 12 & 3R Ratings Maintained (UL50)
- Programmable Thermostat
- Programmable Temperature Alarm
- Six foot [1.8m] (minimum) 3-wire power cord

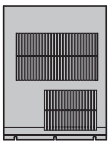

DP17
2,000 BTU/H
17"H x 12"W x 7"D

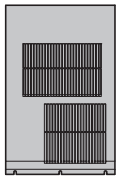

DP21
3,000 BTU/H
21"H x 13"W x 7"D

Dimensions, inches [mm], are for reference only and subject to change.

✦ Contact KOOLTRONIC for information.

DP17 PROFILE AIR-COOLED PANEL-MOUNTED AIR CONDITIONERS

Model	NEMA Rating	UL/CUL Listed or Recognized	BTU/H Rating	95/95 Rating	Ambient Temp. °F Max./Min.	Ambient Temp. °C Max./Min.	Volts	* Hz	** Running Amps	Approx. Weight lbs	kg
KA4C2DP17L	3R & 12	Listed	2000	1500	131/-20	55/-28	115/100	60/50	4.0	38	17

* 115V 60 Hz models perform at reduced capacity when operated at 100V 50 Hz.
** Rating shown is for operation at maximum ambient temperature.



STANDARD FEATURES

- Baked Powder Finish
- Built-in Condensate Evaporator
- CFC-Free Refrigerant
- Closed-Loop Cooling
- Compressor Short Cycle Protector
- Epoxy-Coated Condenser Coil
- Heavy-duty Steel Shell
- Mounts Internally or Externally
- NEMA 12 & 3R Ratings Maintained (UL50)
- Programmable Temperature Alarm
- Programmable Thermostat Available
- UL/CUL Listed

ACCESSORIES AND OPTIONS

	Page
Adapter	86
Enclosure Heater	86
Filter Recoating Adhesive	86
Internal Corrosion Protection	86
Remote Monitoring	86
Remote Thermostat Relay	86
Replacement Filters	88
Special materials or finishes	✦
Special motors, line cords, or connectors	✦
Stainless Steel Shell	86

c UL us **NEMA TYPE 12 & 3R MAINTAINED**

PROFILE

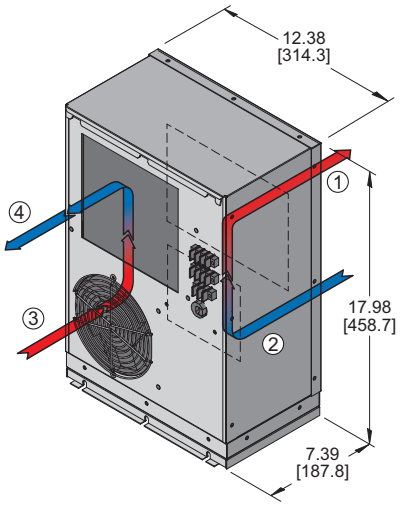

PERFORMANCE CHART

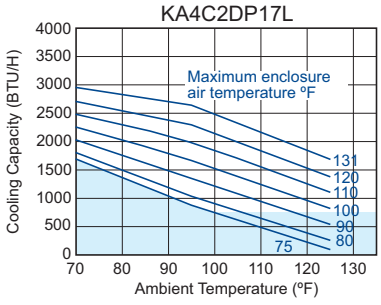

Operation within shaded area not recommended.

① FILTERED CONDENSER AIR INLET (Ambient Air In)
② CONDENSER OUTLET (Warm Ambient Air Out)
③ WARM AIR RETURN FROM ENCLOSURE
④ COOL AIR OUTLET TO ENCLOSURE

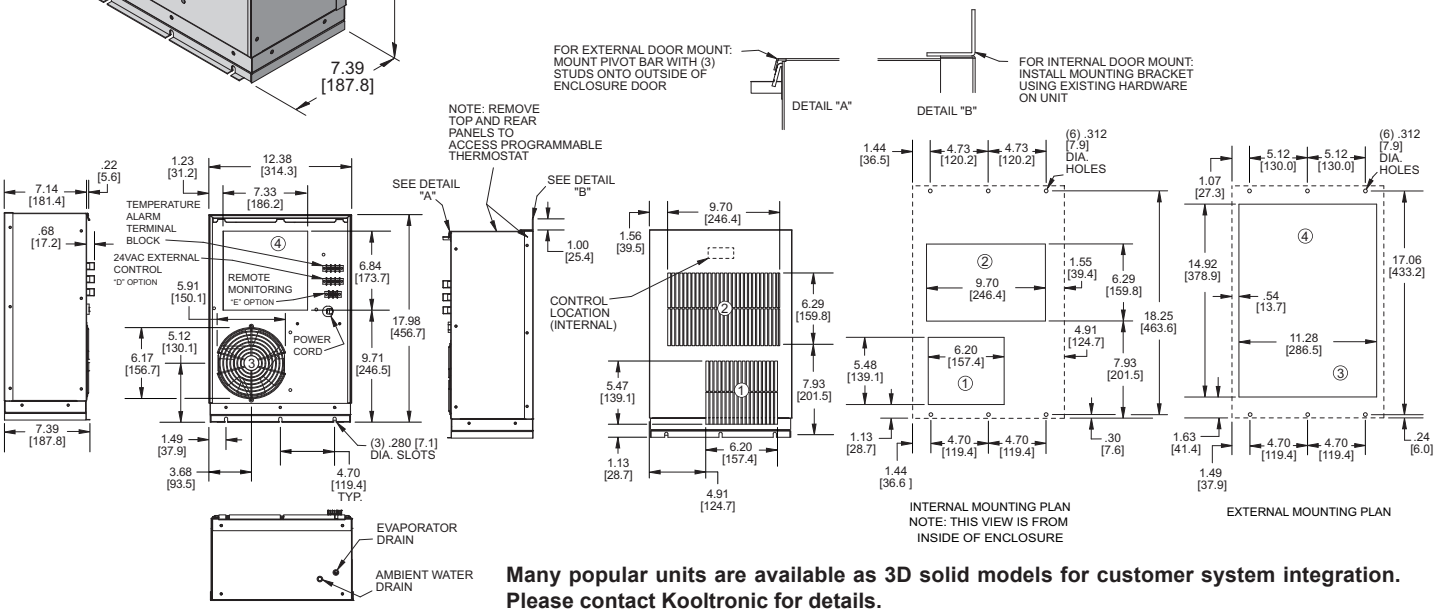

Many popular units are available as 3D solid models for customer system integration. Please contact Kooltronic for details.

Dimensions, inches [mm], are for reference only and subject to change.

✦ Contact KOOLTRONIC for information.

DP21 PROFILE AIR-COOLED PANEL-MOUNTED AIR CONDITIONERS

Products in red are legacy products. Legacy products are no longer in normal production. Consult factory for availability.

Recommended replacement: See *Guardian/GuardianX Series*

Model	NEMA Rating	UL/CUL Listed or Recognized	BTU/H Rating	95/95 Rating	Ambient Temp. ºF Max./Min.	Ambient Temp. ºC Max./Min.	Volts	Hz	* Running Amps	Approx. Weight lbs	Approx. Weight kg
KA4C3DP21L	3R & 12	Listed	3000	2100	131/-20	55/-28	115/100	60/50	5.8	45	20

* Rating shown is for operation at maximum ambient temperature.

STANDARD FEATURES

- Baked Powder Finish
- Built-in Condensate Evaporator
- CFC-Free Refrigerant
- Closed-Loop Cooling
- Compressor Short Cycle Protector
- Epoxy-Coated Condenser Coil
- Heavy-duty Steel Shell
- Mounts Internally or Externally
- NEMA 12 & 3R Ratings Maintained (UL50)
- Programmable Temperature Alarm
- Programmable Thermostat
- UL/CUL Listed

ACCESSORIES AND OPTIONS

	Page
Adapter	86
Enclosure Heater	86
Filter Recoating Adhesive	86
Internal Corrosion Protection	86
Remote Monitoring	86
Remote Thermostat Relay	86
Replacement Filters	88
Special materials or finishes	✦
Special motors, line cords, or connectors	✦
Stainless Steel Shell	86



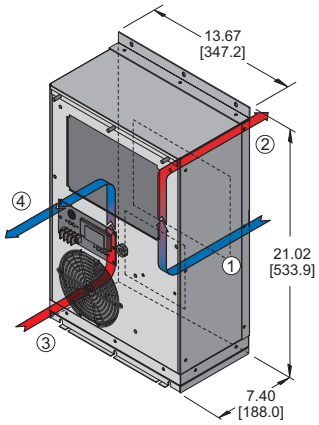

PERFORMANCE CHART

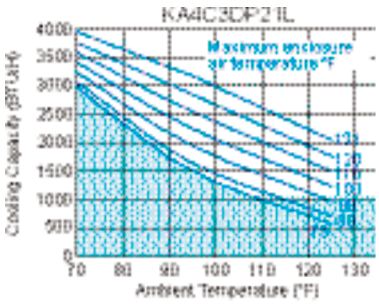

Operation within shaded area not recommended.

NEMA TYPE 12 &3R MAINTAINED

① FILTERED CONDENSER AIR INLET (Ambient Air In)

② CONDENSER OUTLET (Warm Ambient Air Out)

③ WARM AIR RETURN FROM ENCLOSURE

④ COOL AIR OUTLET TO ENCLOSURE

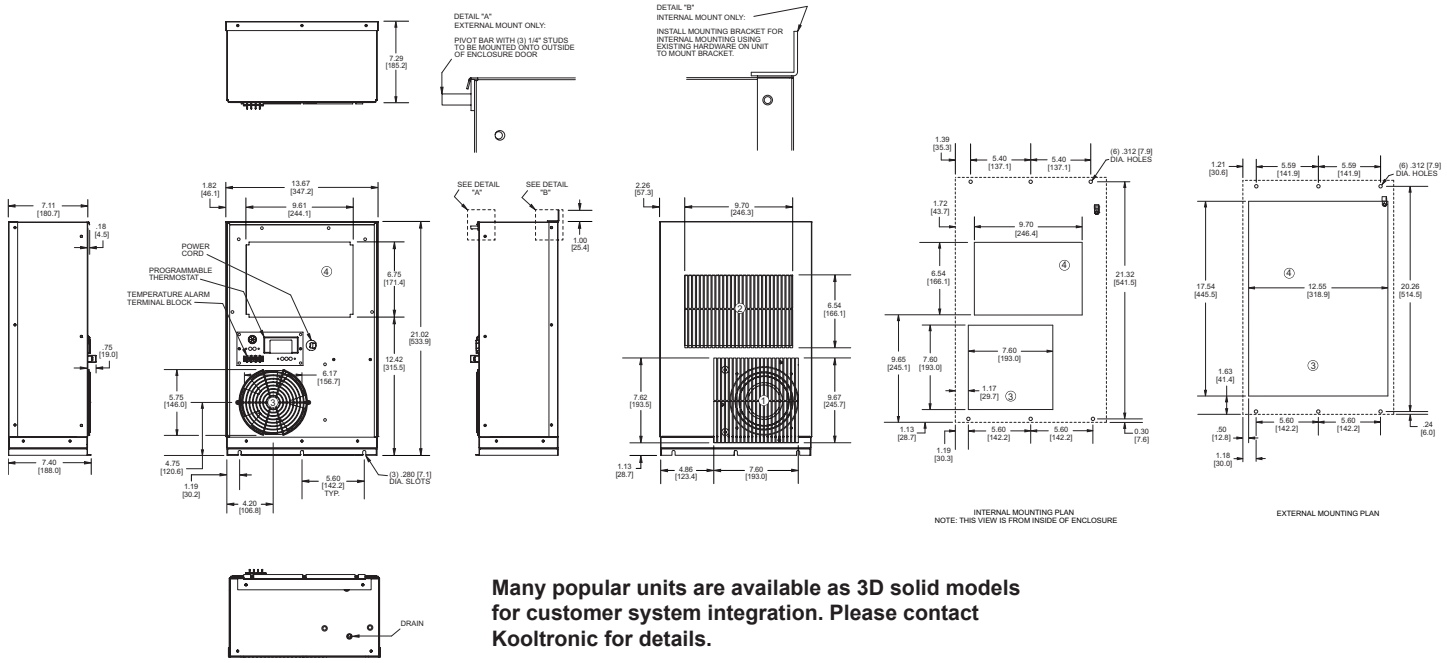

Many popular units are available as 3D solid models for customer system integration. Please contact Kooltronic for details.

Dimensions, inches [mm], are for reference only and subject to change.

✦ Contact KOOLTRONIC for information.

TRIMLINE AIR-COOLED PANEL-MOUNTED AIR CONDITIONERS

Products in red are legacy products. Legacy products are no longer in normal production. Consult factory for availability.

Recommended replacement: See *Guardian/GuardianX or Slimkool Series*



NEMA TYPE 12 MAINTAINED

Many popular units are available as 3D solid models for customer system integration. Please contact Kooltronic for details.

DESCRIPTION

Innovations in technology have resulted in much denser components packaging and smaller available panel sizes on which to mount air conditioners. The KOOLTRONIC ***TrimLine Series*** is the response to these new packaging demands with ***Narrow*** 10" and 12" width panel-mount air conditioners. In addition to being narrower than traditional air conditioner units, the ***TrimLine Series*** include a condensate evaporator and low temperature control thermostat as *standard* features, and are available in all popular voltages and frequencies. The NP17, 28, 33 and Narrow-Mini feature a Programmable Thermostat as a standard feature.

The ***TrimLine Series*** consists of compact models offering capacities from 2,000 to 4,000 BTU/H. The ***TrimLine Series*** are NEMA Type 12 Maintained (UL50).

Outdoor or corrosive environments require weather protection and/or special internal and external protective features. Also see ***Guardian/GuardianX, Integrity NEMA 4/4X*** and ***Intrepid Outdoor Air Conditioners.***

For extreme ambient temperatures and/or severely contaminated environments, the use of ***Water-Cooled Air Conditioners*** or ***Water-Cooled Heat Exchangers*** is recommended.

General specifications common to all KOOLTRONIC Air Conditioners are on the first page of this section.

KOOLTRONIC also designs and manufactures a variety of air conditioners to meet *unique* specifications. We invite your inquiries about our modification and custom-design capabilities.

CALL 1-800-321-KOOL (5665)
or FAX 609-466-1114

TRIMLINE

STANDARD FEATURES

- All NP Series Models UL/CUL Listed or Recognized.
- Built-in Condensate Evaporator
- CFC-free Refrigerant
- Compact design with slim 10" and 12" wide mounting footprints
- Field-reversible condenser outlet blower on NP33
- Filter
- Heavy-duty Steel Shell with Baked Powder Finish
- Programmable Temperature Alarm
- Programmable Thermostat
- NEMA 12 Ratings Maintained (UL50)
- Six foot [1.8m] (minimum) 3-wire power cord

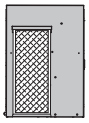

NP17
2,000 BTU/H
17"H x 12"W x 9"D

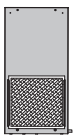

Narrow-Mini
2,500 BTU/H
20"H x 10"W x 10"D

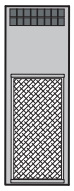

NP28
4,000 BTU/H
28"H x 10"W x 11"D

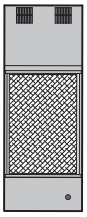

NP33
4,000 BTU/H
33"H x 12"W x 9"D

NP17 TRIMLINE AIR-COOLED PANEL-MOUNTED AIR CONDITIONERS

Products in red are legacy products. Legacy products are no longer in normal production. Consult factory for availability.

Recommended replacement: See *Guardian/GuardianX or Slimkool Series.*

These products have undergone a design update. The older models are no longer available.

Model	NEMA Rating	BTU/H Rating	95/95 Rating	Ambient Temp. °F Max./Min.	Ambient Temp. °C Max./Min.	Volts	Hz	* Running Amps	Approx. Weight lbs	Approx. Weight kg
K2A4C2.0NP17L	12	2000	1800	120/-20	49/-28	115/110	60/50	5.0	55	25

* Rating shown is for operation at maximum ambient temperature.

STANDARD FEATURES

- Baked Powder Finish
- Built-in Condensate Evaporator
- CFC-Free Refrigerant
- Compressor Short Cycle Protector
- Epoxy-Coated Coils
- Filter
- Low Ambient Kit
- NEMA 12 Rating Maintained (UL50)
- Programmable Temperature Alarm
- Programmable Thermostat
- UL/CUL Listed

ACCESSORIES AND OPTIONS

	Page
Filter Recoating Adhesive	86
Internal Corrosion Protection	86
Lifting Eyes	86
Remote Monitoring	86
Remote Thermostat Relay	86
Replacement Filters	88
Special controls or indicators	✦
Special materials or finishes	✦
Special motors, line cords, or connectors	✦
Stainless or Aluminum Shell	86



c UL us NEMA TYPE 12 MAINTAINED

TRIMLINE

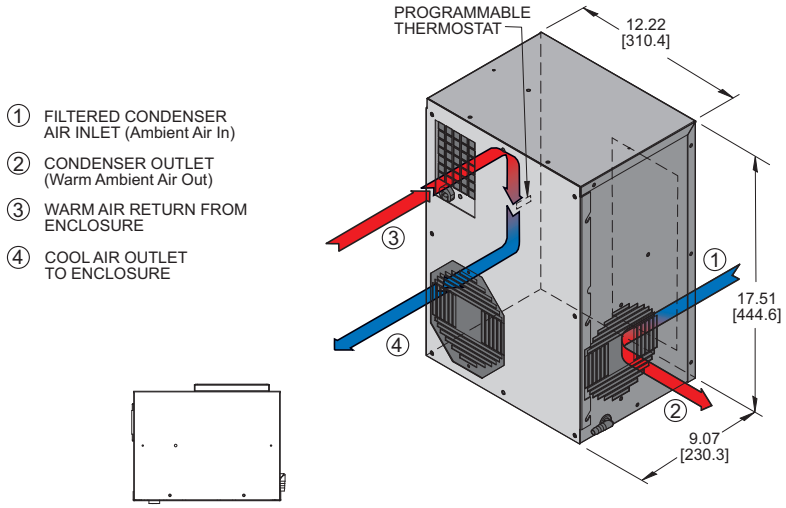

Many popular units are available as 3D solid models for customer system integration. Please contact Kooltronic for details.

PERFORMANCE CHART

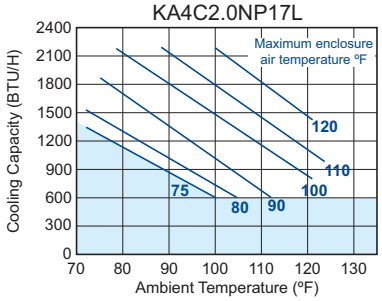

Operation within shaded area not recommended.

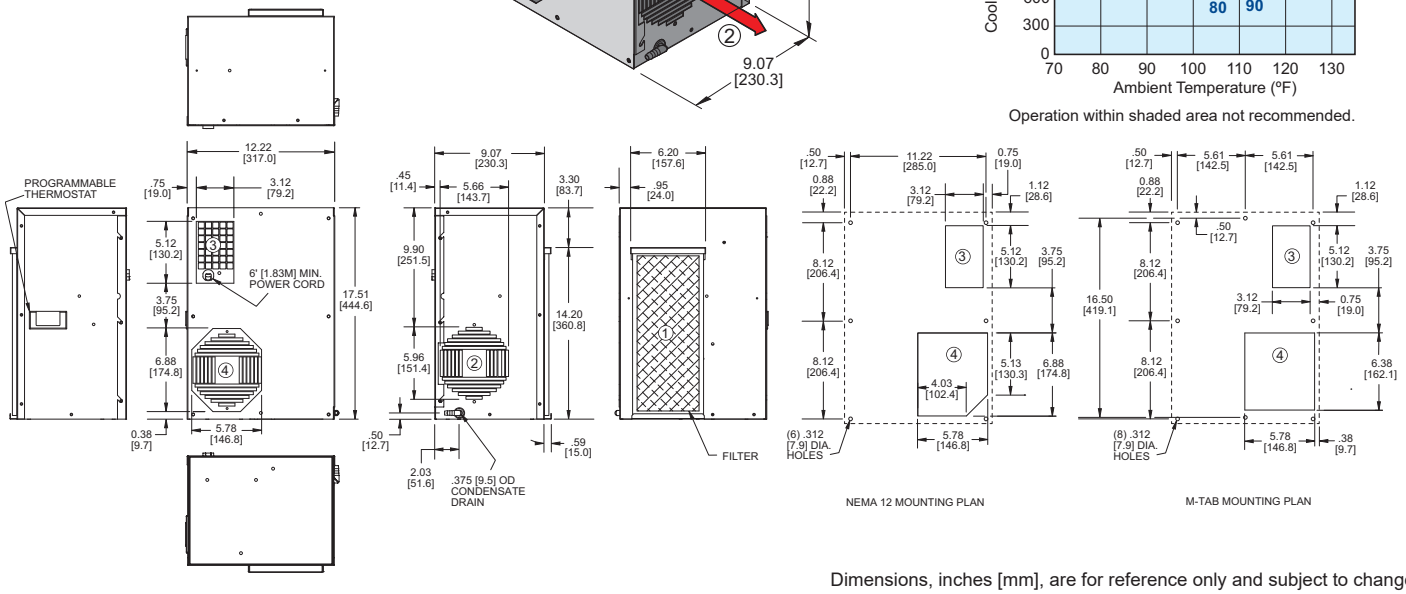

Dimensions, inches [mm], are for reference only and subject to change.

✦ Contact KOOLTRONIC for information.

NARROW-MINI TRIMLINE AIR-COOLED PANEL-MOUNTED AIR CONDITIONERS



Model	NEMA Rating	BTU/H Rating	95/95 Rating	Ambient Temp. ºF Max./Min.	Ambient Temp. ºC Max./Min.	Volts	Hz	* Running Amps	Approx. Weight lbs	Approx. Weight kg
KA4C2.5NML	12	2900	2400	120/50	49/10	115	60	5.0	38	17
K2A4C2.5NML	12	2500	2000	125/50	52/10	230/200	60	3.6	38	17

* Rating shown is for operation at maximum ambient temperature.

c UL us NEMA TYPE 12 MAINTAINED

STANDARD FEATURES

- Built-in Condensate Evaporator
- CFC-Free Refrigerant
- Closed-Loop Cooling
- Compressor Short Cycle Protector
- Epoxy-Coated Evaporator Coils
- Filter
- NEMA 12 Rating Maintained (UL50)
- Programmable Temperature Alarm
- Programmable Thermostat
- UL/CUL Listed

ACCESSORIES AND OPTIONS

	Page
■ Adapter	86
■ Filter Recoating Adhesive	86
■ High-Capacity Condensate Evaporator	87
■ Internal Corrosion Protection	86
■ Lifting Eyes	86
■ M-Tab Mounting (for existing retrofits)	✦
■ Remote Monitoring	86
■ Remote Thermostat Relay	86
■ Replacement Filters	88
■ Special materials or finishes	✦
■ Special motors, line cords, or connectors	✦
■ Stainless or Aluminum Shell	86
■ Weather Protection Kit	87

PERFORMANCE CHART

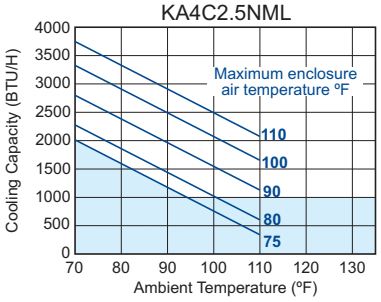

Operation within shaded area not recommended.

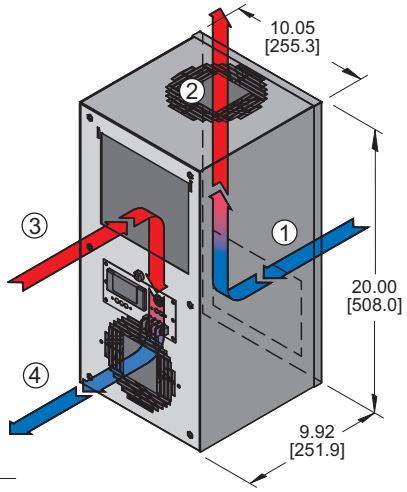

① FILTERED CONDENSER AIR INLET (Ambient Air In)
② CONDENSER OUTLET (Warm Ambient Air Out)
③ WARM AIR RETURN FROM ENCLOSURE
④ COOL AIR OUTLET TO ENCLOSURE

Many popular units are available as 3D solid models for customer system integration. Please contact Kooltronic for details.

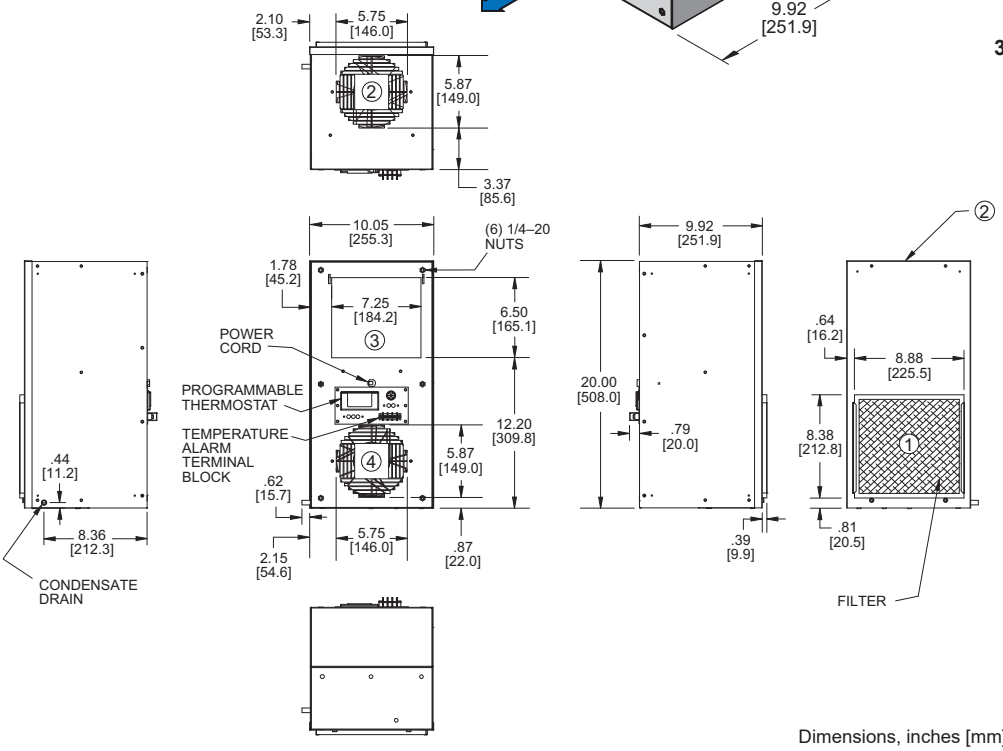

Dimensions, inches [mm], are for reference only and subject to change.

✦ Contact KOOLTRONIC for information.

TRIMLINE

NP28 TRIMLINE AIR-COOLED PANEL-MOUNTED AIR CONDITIONERS

Products in red are legacy products. Legacy products are no longer in normal production. Consult factory for availability.

Recommended replacement: See *Guardian/GuardianX or Slimkool Series.*

These products have undergone a design update. The older models are no longer available.

Model	NEMA Rating	BTU/H Rating	95/95 Rating	Ambient Temp. °F Max./Min.	Ambient Temp. °C Max./Min.	Volts	Hz	* Running Amps	Fuse Size (Amps)	Approx. Weight lbs	Approx. Weight kg
KA6C4NP28L	12	4000	2823	120/50	49/10	115/110	60/50	8.0/8.0	15	85	39

* Rating shown is for operation at maximum ambient temperature.



c UL us NEMA TYPE 12 MAINTAINED

STANDARD FEATURES

- Baked Powder Finish
- Built-in Condensate Evaporator
- CFC-Free Refrigerant
- Compressor Short Cycle Protector
- Epoxy-Coated Coils
- Filter
- Low Ambient Kit
- NEMA 12 Rating Maintained (UL50)
- Programmable Temperature Alarm
- Programmable Thermostat
- UL/CUL Listed

ACCESSORIES AND OPTIONS

	Page
■ Filter Recoating Adhesive	86
■ Internal Corrosion Protection	86
■ Lifting Eyes	86
■ Remote Monitoring	86
■ Remote Thermostat Relay	86
■ Replacement Filters	88
■ Special controls or indicators	✦
■ Special materials or finishes	✦
■ Special motors, line cords, or connectors	✦
■ Stainless or Aluminum Shell	86

① FILTERED CONDENSER AIR INLET (Ambient Air In)

② CONDENSER OUTLET (Warm Ambient Air Out)

③ WARM AIR RETURN FROM ENCLOSURE

④ COOL AIR OUTLET TO ENCLOSURE

PERFORMANCE CHART

KA4C4NP28L

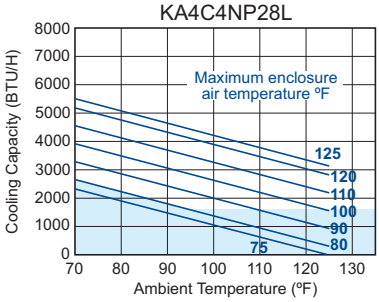

Operation within shaded area not recommended.

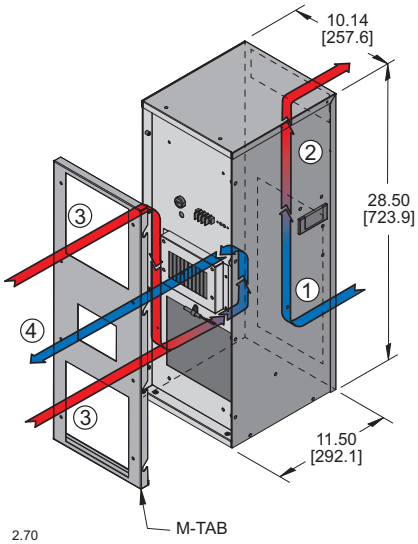

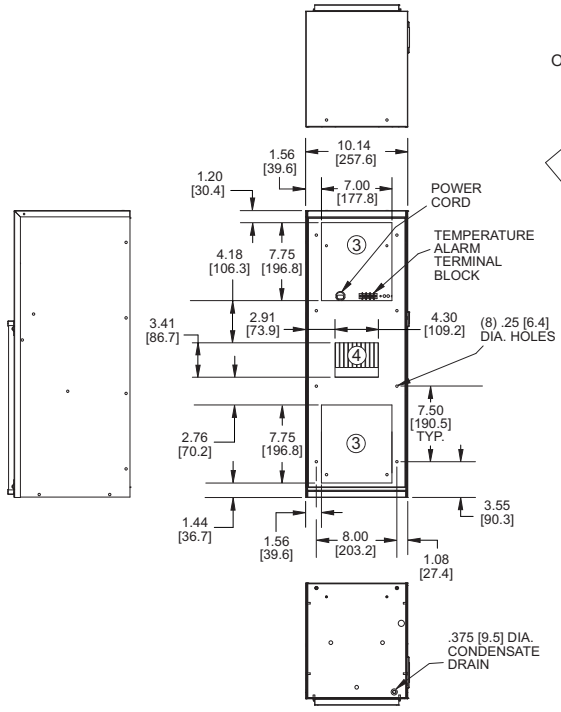

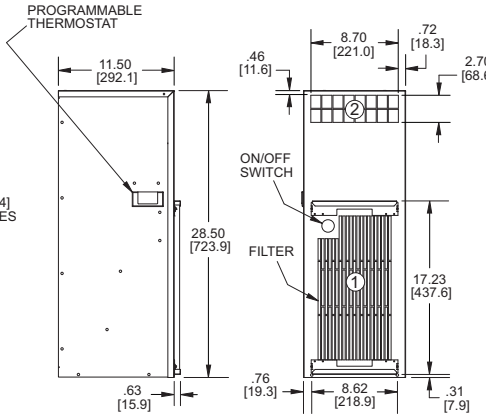

Many popular units are available as 3D solid models for customer system integration. Please contact Kooltronic for details.

MOUNTING PLAN

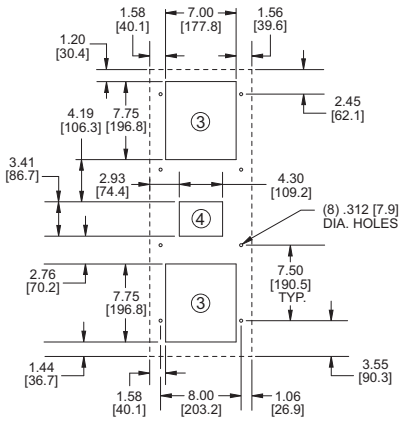

Dimensions, inches [mm], are for reference only and subject to change.

✦ Contact KOOLTRONIC for information.

TRIMLINE

NP33 TRIMLINE AIR-COOLED PANEL-MOUNTED AIR CONDITIONERS

Products in red are legacy products. Legacy products are no longer in normal production. Consult factory for availability.

Recommended replacement: See *Guardian/GuardianX or Slimkool Series.*

These products have undergone a design update. The older models are no longer available.



Model	NEMA Rating	BTU/H Rating	95/95 Rating	Ambient Temp. °F Max./Min.	Ambient Temp. °C Max./Min.	Volts	Hz	* Running Amps	Approx. Weight lbs	Approx. Weight kg
KA4C4NP33L	12	4000	2770	125/50	52/10	115/100	60/50	9.3/10.0	90	41
K2A4C4NP33L	12	4000	2283	120/50	49/10	230/200	60/50	5.5	90	41

* Rating shown is for operation at maximum ambient temperature.

STANDARD FEATURES

- Baked Powder Finish
- Built-in Condensate Evaporator
- CFC-Free Refrigerant
- Closed-Loop Cooling
- Compressor Short Cycle Protector
- Filter
- Low Ambient Kit
- NEMA 12 Rating Maintained (UL50)
- Programmable Thermostat
- Programmable Temperature Alarm
- UL/CUL Listed

ACCESSORIES AND OPTIONS

	Page
Filter Recoating Adhesive	86
Internal Corrosion Protection	86
Lifting Eyes	86
Remote Monitoring	86
Remote Thermostat Relay	86
Replacement Filters	88
Special controls or indicators	✦
Special materials or finishes	✦
Special motors, line cords, or connectors	✦
Stainless or Aluminum Shell	88

c UL us **NEMA TYPE 12 MAINTAINED**

PERFORMANCE CHART

KA4C4NP33L

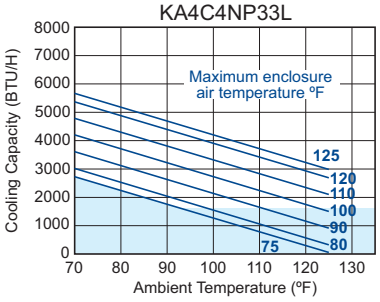

Operation within shaded area not recommended.

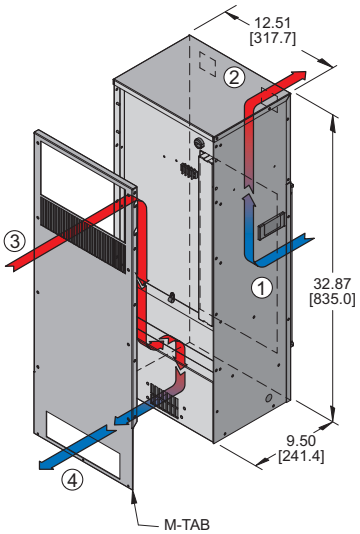

① FILTERED CONDENSER AIR INLET (Ambient Air In)

② CONDENSER OUTLET (Warm Ambient Air Out)

③ WARM AIR RETURN FROM ENCLOSURE

④ COOL AIR OUTLET TO ENCLOSURE

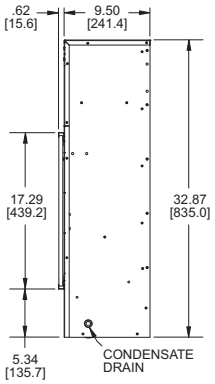

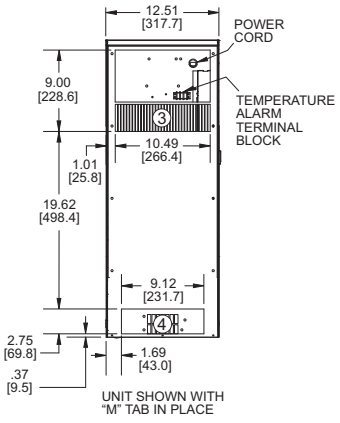

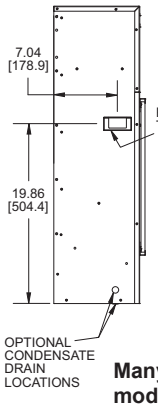

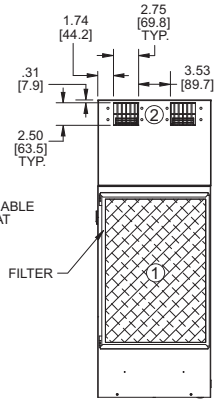

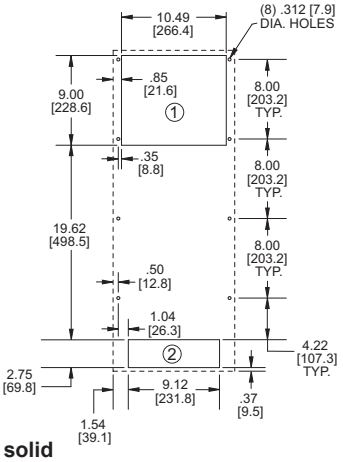

MOUNTING PLAN

Many popular units are available as 3D solid models for customer system integration. Please contact Kooltronic for details.

Dimensions, inches [mm], are for reference only and subject to change.

✦ Contact KOOLTRONIC for information.

TRADITIONAL AIR-COOLED PANEL-MOUNTED AIR CONDITIONERS

DESCRIPTION

These KOOLTRONIC Air Conditioners offers cooling capacities of 1,000 BTU/H, in 14" width, including side flanges. The ***Micro Mini*** is ideal for low-capacity applications with space limitations, such as a kiosk. ***Micro Mini Air Conditioners*** are suitable for applications that have low static pressures, where fans can provide adequate airflow. Mounted on any vertical panel of equipment enclosures, they occupy minimal floor space and no cabinet space. The ***Micro-Mini*** offers a Programmable Thermostat as a standard feature

Gasketed mountings and the closed-loop design seal out moisture and contaminant-laden ambient air. Powerful **Kooltronic-designed** centrifugal blowers circulate clean, cool air throughout the enclosure.

Outdoor or corrosive environments require weather protection and/or special internal and external protective features. Also see ***Guardian/GuardianX, Slimkool, Integrity NEMA 4/4X*** and ***Intrepid Outdoor Air Conditioners***.

For extreme ambient temperatures and/or severely contaminated environments, the use of ***Water-Cooled Air Conditioners*** or ***Water-Cooled Heat Exchangers*** is recommended.

General specifications common to all KOOLTRONIC Air Conditioners are on the first page of this section.

KOOLTRONIC also designs and manufactures a variety of air conditioners to meet *unique* specifications. We invite your inquiries about our modification and custom-design capabilities.

CALL 1-800-321-KOOL (5665)
or FAX 609-466-1114

Many popular units are available as 3D solid models for customer system integration. Please contact Kooltronic for details.



NEMA TYPE 12 MAINTAINED

TRADITIONAL

STANDARD FEATURES

- Ball-bearing motors
- CFC-free Refrigerant
- Closed-Loop Cooling
- Compressor Short Cycle Prorector
- Filter
- Heavy-duty Steel Shell with Baked Powder Finish
- NEMA 12 Rating Maintained (UL50)
- Programmable Thermostat
- Temperature Alarm
- UL/CUL Listed

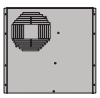

Micro-Mini
1,000 BTU/H
13"H x 14"W x 6"D

TRADITIONAL MICRO-MINI AIR-COOLED PANEL-MOUNTED AIR CONDITIONERS



Model	NEMA Rating	BTU/H Rating	95/95 Rating	Ambient Temp. ºF Max./Min	Ambient Temp. ºC Max./Min	Volts	Hz	* Running Amps	Approx. Weight lbs	Approx. Weight kg
KA4C1.0MML	12	1000	850	125/-20	52/-28	115/100	60/50	2.7	30	14

* Rating shown is for operation at maximum ambient temperature.

c UL us

NEMA
TYPE 12
MAINTAINED

STANDARD FEATURES

- Ball-bearing motors
- CFC-free Refrigerant
- Closed-Loop Cooling
- Compressor Short Cycle Protector
- Filter
- NEMA 12 Rating Maintained (UL50)
- Programmable Thermostat
- Temperature Alarm
- UL/CUL Listed

ACCESSORIES AND OPTIONS

	Page
Adapter	86
Filter Recoating Adhesive	86
High-Capacity Condensate Evaporator	87
Internal Corrosion Protection	86
Lifting Eyes	86
Remote Monitoring	86
Remote Thermostat Relay	86
Replacement Filters	88
Special materials or finishes	✦
Stainless or Aluminum Shell	86
Weather Protection Kit	87

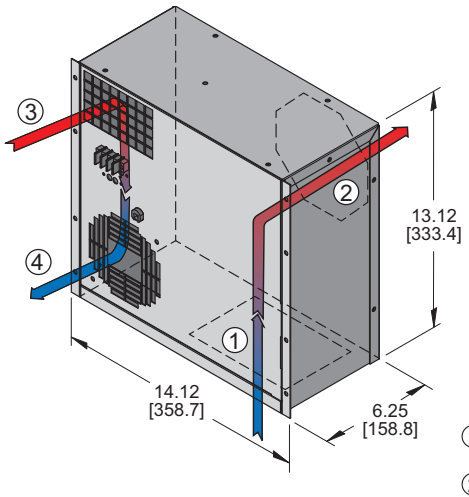

① FILTERED CONDENSER AIR INLET (Ambient Air In)

② CONDENSER OUTLET (Warm Ambient Air Out)

③ WARM AIR RETURN FROM ENCLOSURE

④ COOL AIR OUTLET TO ENCLOSURE

Many popular units are available as 3D solid models for customer system integration. Please contact Kooltronic for details.

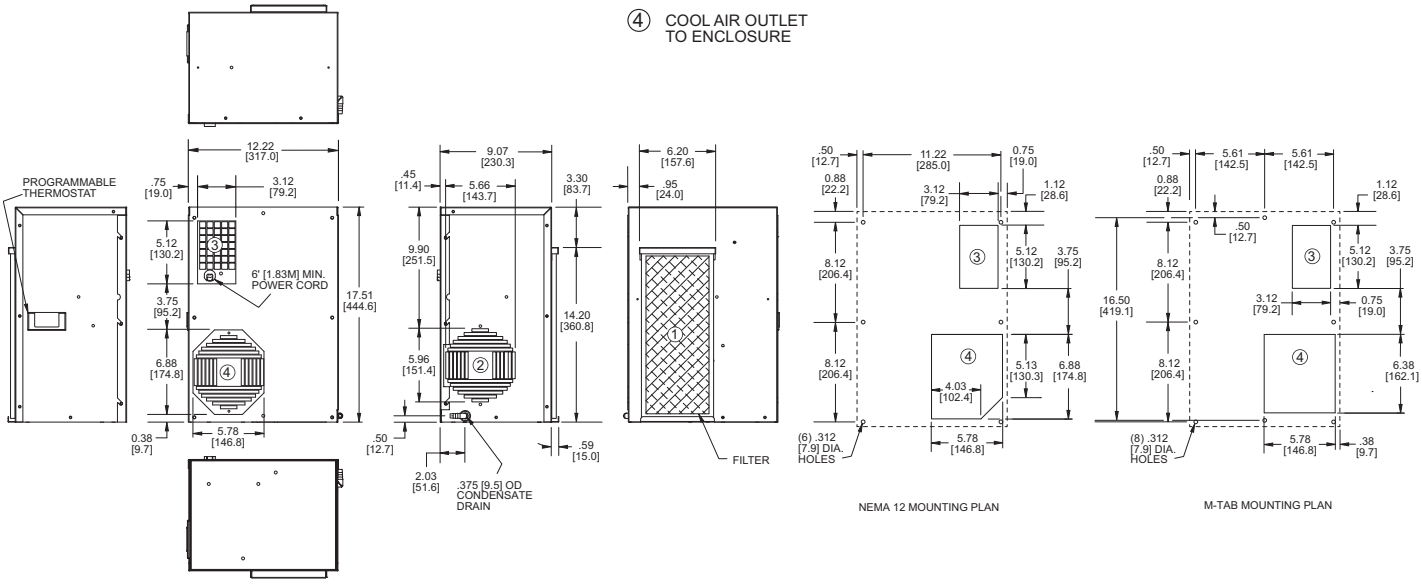

Dimensions, inches [mm], are for reference only and subject to change.

✦ Contact KOOLTRONIC for information.

TRADITIONAL

INTEGRITY NEMA 4/4X AIR-COOLED PANEL-MOUNTED AIR CONDITIONERS

Products in red are legacy products. Legacy products are no longer in normal production. Consult factory for availability.

Recommended replacement: See *Guardian/GuardianX Series*

DESCRIPTION

Designed specifically for NEMA 4/4X Enclosure applications that require washdown or are subject to outdoor storm conditions, KOOLTRONIC ***Integrity NEMA 4/4X Air Conditioners*** protect the ratings of NEMA 4/4X Enclosures.

These exclusive **patented** UL/CUL Panel-Mounted Air Conditioners provide superior closed-loop cooling and also protect against the hazards specified for both Indoor and Outdoor NEMA 4/4X enclosures. Tested and rated by universally recognized Underwriters Laboratories, these **304-2B Stainless Steel** Air Conditioners prevent unwanted environmental penetration of NEMA 4/4X Enclosures as they provide a clean, cool internal environment.

For extreme ambient temperatures and/or severely contaminated environments, the use of ***Water-Cooled Air Conditioners*** or ***Water-Cooled Heat Exchangers*** is recommended.

General specifications common to all KOOLTRONIC Air Conditioners are on the first page of this section.

KOOLTRONIC also designs and manufactures a variety of air conditioners to meet *unique* specifications. We invite your inquiries about our modification and custom-design capabilities.

CALL 1-800-321-KOOL (5665)
or FAX 609-466-1114



c UL us NEMA TYPE 4/4X MAINTAINED

Many popular units are available as 3D solid models for customer system integration. Please contact Kooltronic for details.

STANDARD FEATURES

- Baked Powder Finish
- CFC-Free Refrigerant
- Closed-Loop Cooling
- Condenser Impeller Speed Controller
- Compressor Short Cycle Protector
- Filter
- NEMA 12 & 4/4X Ratings maintained (UL50)
- Programmable Temperature Alarm
- Programmable Thermostat
- Stainless Steel Shell (304-2B)
- UL/CUL Listed

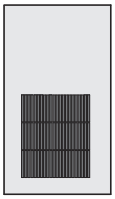

P21L
3,000 BTU/H
21"H x 12"W x 12" D

INTEGRITY 21 AIR-COOLED PANEL-MOUNTED AIR CONDITIONERS

Products in red are legacy products. Legacy products are no longer in normal production. Consult factory for availability.

Recommended replacement: See *Guardian/GuardianX Series*



NEMA TYPE 4/4X MAINTAINED

Model	NEMA Rating	BTU/H Rating	95/95 Rating	Ambient Temp. ºF Max./Min.	Ambient Temp. ºC Max./Min.	Volts	Hz	* Running Amps	Approx. Weight lbs	Approx. Weight kg
KNA4C3P21L	4/4X	3000	2260	125/0	55/-17	115	60	9.3	76	34
K2NA4C3P21L	4/4X	3000	2160	131/0	52/-17	230	60	4.7	76	34

* Rating shown is for operation at maximum ambient temperature.

STANDARD FEATURES

- Baked Powder Finish
- CFC-Free Refrigerant
- Closed-Loop Cooling
- Compressor Short Cycle Protector
- Condenser Impeller Speed Controller
- Filter
- NEMA 12 & 4/4X Ratings Maintained (UL50)
- Programmable Temperature Alarm
- Programmable Thermostat
- Stainless Steel Shell (304-2B)
- UL/CUL Listed

ACCESSORIES AND OPTIONS

	Page
Enclosure Heater	86
Filter Recoating Adhesive	86
Internal Corrossion Protection	86
Remote Monitoring	86
Remote Thermostat Relay	86
Replacement Filters	88
Special materials or finishes	✦
Special motors, line cords or connectors	✦

PERFORMANCE CHART

KNA4C3P21L

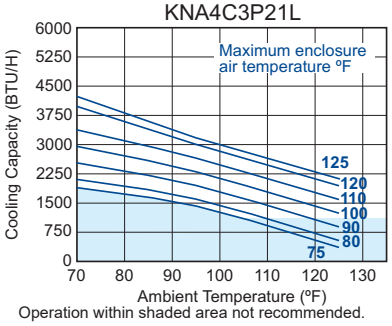

Operation within shaded area not recommended.

① FILTERED CONDENSER AIR INLET (Ambient Air In)

② CONDENSER OUTLET (Warm Ambient Air Out)

③ WARM AIR RETURN FROM ENCLOSURE

④ COOL AIR OUTLET TO ENCLOSURE

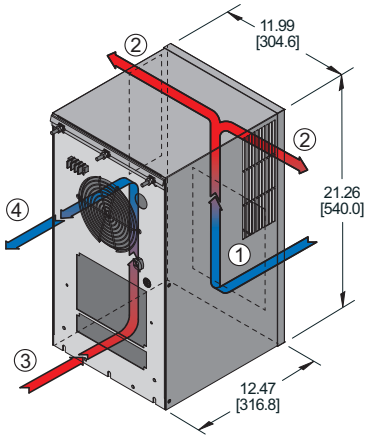

Many popular units are available as 3D solid models for customer system integration. Please contact Kooltronic for details.

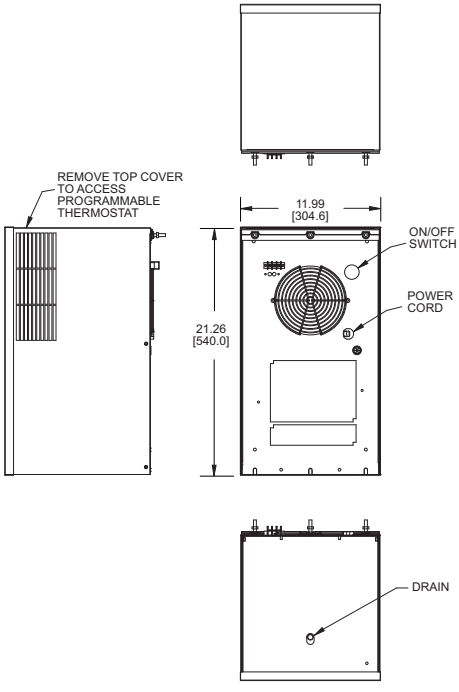

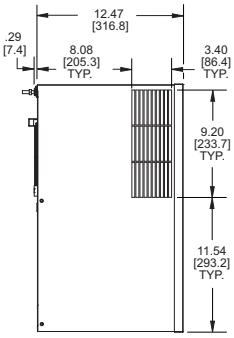

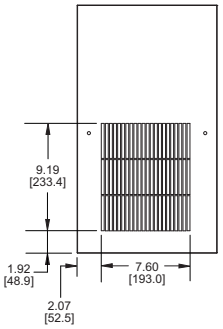

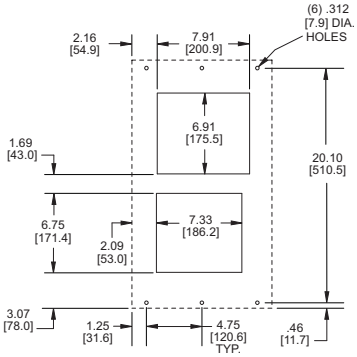

MOUNTING PLAN

Dimensions, inches [mm], are for reference only and subject to change.

✦ Contact KOOLTRONIC for information.

INTREPID AIR-COOLED OUTDOOR PANEL-MOUNTED AIR CONDITIONERS

DESCRIPTION

These specifically-designed ***Intrepid Outdoor Air Conditioners*** are UL Recognized and approved for outdoor use to protect the enclosure against nearly all outdoor climate hazards.

Sensitive internal components are shielded from invasion by the outdoor elements, while the internal enclosure environment is effectively controlled. Cooling, dehumidification and heating (optional) are provided over a wide range of conditions.

The weather protection afforded by these air conditioners is integral to the cabinetry, without protruding weather hoods. These units feature a sturdy painted galvanized exterior, gasketed flanges and tamper-resistant external fasteners to prevent vandalism or unauthorized access.

Powerful **Kooltronic-designed** blowers in the interior compartment assure maximum airflow and efficient heat transfer, even in densely-packed enclosures, for the most demanding electronic, industrial or telecommunications applications.

These ***EP56 Air Conditioners*** have been specially designed for applications where sound level must be minimized. The air conditioners utilize a condenser fan speed controller, which delivers significant noise reduction.

For more extreme climatic conditions or applications requiring total sealing of the enclosure from the environment, Kooltronic offers either the ***GuardianX Series or the Slimkool Series*** that maintain NEMA 4 or 4X enclosure ratings.

General specifications common to all KOOLTRONIC Air Conditioners are on the first page of this section.

KOOLTRONIC also designs and manufactures a variety of air conditioners to meet *unique* specifications. We invite your inquiries about our modification and custom-design capabilities.

CALL 1-800-321-KOOL (5665)
or FAX 609-466-1114



c UL us

NEMA
TYPE 12, 3R & 1
MAINTAINED

Many popular units are available as 3D solid models for customer system integration. Please contact Kooltronic for details.

STANDARD FEATURES

- Available in either top or bottom evaporator air discharge models
- Baked Powder Finish
- Closed-Loop Cooling
- Condenser Blower Speed Controller
- Crankcase Compressor Heater
- Heavy-duty Steel Shell
- Low Temperature Control Thermostat
- NEMA 12, 3R & 1 Ratings Maintained (UL50)
- Six foot [1.8m] (minimum) 3-wire power cord
- Tamper-resistant hardware for protection at remote sites
- UL Recognized
- Zero ODP Refrigerant

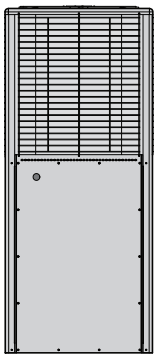

EP56
30,000 BTU/H
56"H x 24"W x 24" D

INTREPID OUTDOOR AIR-COOLED PANEL-MOUNTED AIR CONDITIONERS



NEMA
TYPE 12, 3R & 1
MAINTAINED

Model	NEMA Ratings	BTU/H Rating	95/95 Rating	Ambient Temp. °F Max./Min.	Ambient Temp. °C Max./Min.	Volts	Hz	* Cooling Amps	Heating Amps	Approx. Weight lbs	Approx. Weight kg
K2A6C30EP56TR**	12, 3R &1	30000	28000	131/0	55/-17	230	60	25.5	15.3	302	137
K2A6C30EP56BR***	12, 3R &1	30000	28000	131/0	55/-17	230	60	25.5	15.3	304	138

* Rating shown is for operation at maximum ambient temperature.
** Top Evaporator Air Discharge
*** Bottom Evaporator Air Discharge

STANDARD FEATURES

- Available in either top or bottom evaporator air discharge models
- Baked Powder Finish
- Closed-Loop Cooling
- Condenser Blower Speed Controller
- Crankcase Compressor Heater
- Heavy-duty Steel Shell
- Low Temperature Control Thermostat
- NEMA 12, 3R & 1 Ratings Maintained (UL50)
- Tamper-resistant hardware
- UL Recognized
- Zero ODP Refrigerant

ACCESSORIES AND OPTIONS

	Page
Enclosure Heater	86
Internal Corrosion Protection	86
Remote Thermostat Relay	86
Special paint finishes	✦
Temperature Alarm	86

Many popular units are available as 3D solid models for customer system integration. Please contact Kooltronic for details.

PERFORMANCE CHART

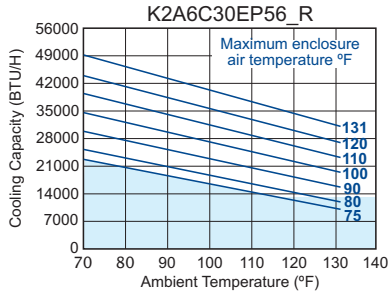

Operation within shaded area not recommended.

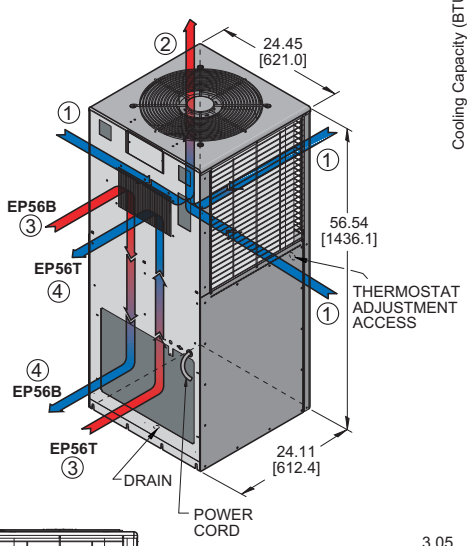

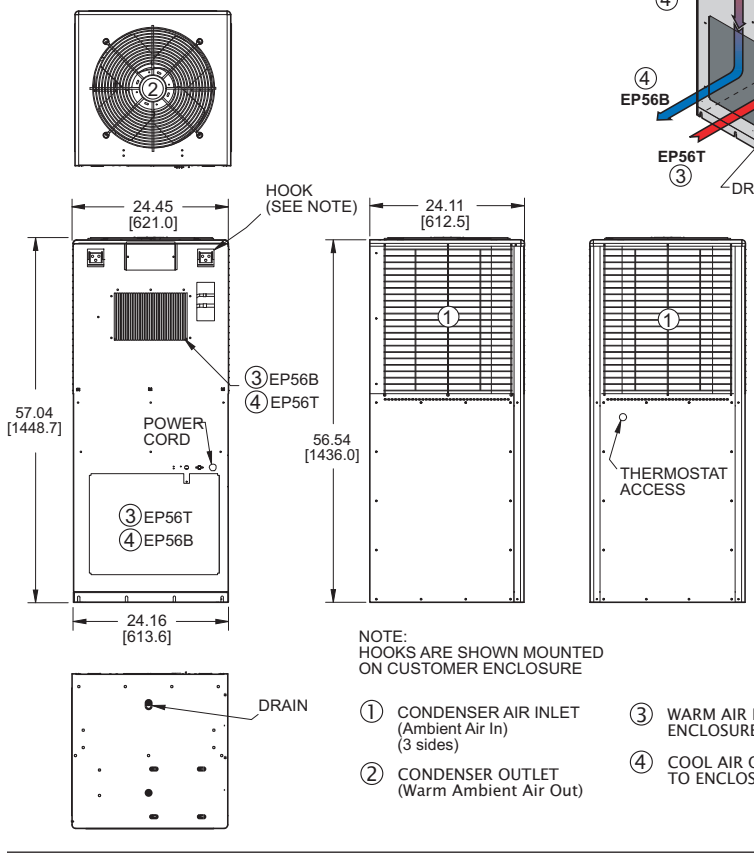

NOTE:
HOOKS ARE SHOWN MOUNTED ON CUSTOMER ENCLOSURE

① CONDENSER AIR INLET (Ambient Air In) (3 sides)
② CONDENSER OUTLET (Warm Ambient Air Out)
③ WARM AIR RETURN FROM ENCLOSURE
④ COOL AIR OUTLET TO ENCLOSURE

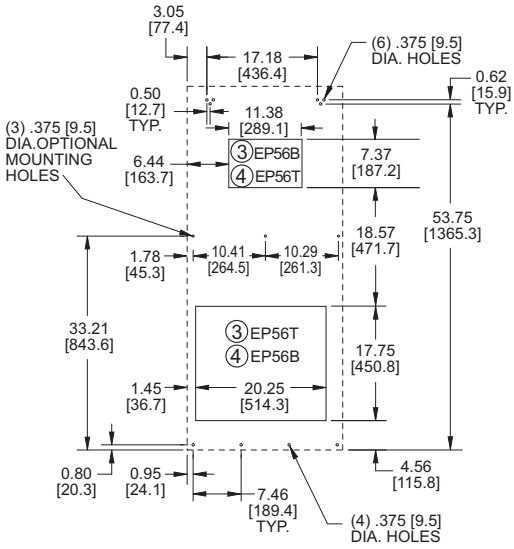

MOUNTING PLAN

Dimensions, inches [mm], are for reference only and subject to change.

✦ Contact KOOLTRONIC for information.

HORIZONTAL AIR-COOLED RACK-MOUNTED AIR CONDITIONERS

DESCRIPTION

KOOLTRONIC ***Air-Cooled Rack-Mounted Air Conditioners*** are particularly suited for applications where internal horizontal mounting is preferred over external panel, door or top mounting.

These models are available in two series. The ***RML Series***, with a capacity of 5,000 BTU/H, offers a choice of up to five airflow patterns, allowing installation in any location within a data rack. Using supplied baffle plates the ***RML*** can easily be configured for a variety of applications. In addition, the ***RML*** features a unique condenser airflow design with both intake and outlet at the front of the unit. The ***RML*** is the only air conditioner on the market with this same-side condenser airflow configuration. This design eliminates the need for additional duct work, which takes up valuable space within an enclosure. With the ***RML***, enclosure space normally taken up by duct work can now be used for electronic components.

The ***H9 and H10 Series*** offer 3,500 BTU/H. The ***H9*** and ***H10*** are typically mounted internally at the bottom of the cabinet. For rack-mounting at the top of a cabinet use the ***Compact Plus Series*** of ***Horizontal Top-Mount Air Conditioners*** with optional Brackets for Rack Mounting (see page 88).

KOOLTRONIC ***Rack-Mounted Air Conditioners*** all include EIA-notched flanges. Air-cooled models are provided with attractive 19-inch wide stainless steel grilles and knurled captive fasteners for easy removal. Grille area is 65% open. If preferred, side rails can be supplied.

Outdoor or corrosive environments require weather protection and/or special internal and external protective features.

For extreme ambient temperatures and/or severely contaminated environments, the use of ***Water-Cooled Air Conditioners*** or ***Water-Cooled Heat Exchangers*** is recommended.

General specifications common to all KOOLTRONIC Air Conditioners are on the first page of this section.

KOOLTRONIC also designs and manufactures a variety of air conditioners to meet *unique* specifications. We invite your inquiries about our modification and custom-design capabilities.

CALL 1-800-321-KOOL (5665)
or FAX 609-466-1114



Many popular units are available as 3D solid models for customer system integration. Please contact Kooltronic for details.

RACK-MOUNTED

STANDARD FEATURES (RML)

- All Models UL/CUL Listed
- CFC-Free Refrigerant
- Closed-Loop Cooling
- Condenser Impeller Speed Controller
- Compressor Short Cycle Protector
- Customized airflow with supplied baffle plates
- Filter
- Heavy-duty Steel Shell with Baked Powder Finish
- Ideal for inconspicuous internal mounting
- Programmable Temperature Alarm
- Programmable Thermostat
- NEMA 12 Rating Maintained (UL50)
- Six foot [1.8m] (minimum) 3-wire power cord
- Unique condenser airflow design

ACCESSORIES AND OPTIONS (RML)

	Page
Enclosure Heater	86
Filter Recoating Adhesive	86
Internal corrosion protection	86
Remote Monitoring	86
Remote Thermostat Relay	86
Replacement Filters	88
Special materials or finishes	✦
Special motors, line cords or connectors	✦
Stainless or Aluminum Shell	86

STANDARD FEATURES (H9 & H10)

- Baked Powder Finish
- Built-in Condensate Evaporator
- CFC-Free Refrigerant
- Closed-Loop Cooling
- Compressor Short Cycle Protector
- Filter
- Programmable Temperature Alarm
- Programmable Thermostat
- Six foot [1.8m] (minimum) 3-wire power cord
- UL/CUR Recognized▾

ACCESSORIES AND OPTIONS (H9 & H10)

	Page
Filter Recoating Adhesive	86
Internal corrosion protection	86
Lifting Eyes	86
Remote Monitoring	86
Remote Thermostat Relay	86
Replacement Filters	88
Special materials or finishes	✦
Special motors, line cords or connectors	✦
Stainless or Aluminum Shell	86

▾ UL/CUL Listed models are available at added cost.

HORIZONTAL AIR-COOLED RACK-MOUNTED AIR CONDITIONERS

RML

Model	BTU/H Capacity	95/95 Rating BTU/H	Ambient Temp. ºF Max./Min.	Ambient Temp. ºC Max./Min.	Volts	Hz	** Running Amps	Approx. Weight lbs	Approx. Weight kg
KA4C5RML	5000	4400	120*/0	49*/-17	115/100	60/50	15.0/14.5	97	44
K2A4C5RML	5000	4150/4030	120*/0	49*/-17	230	60/50	7.8/6.8	97	44

* Maximum ambient temperature is shown for Option 1 evaporator airflow. For other options maximum ambient temperature is 115ºF.

** Rating shown is for operation at maximum ambient temperature.

① FILTERED CONDENSER AIR INLET (Ambient Air In)
② CONDENSER OUTLET (Warm Ambient Air Out)
③ WARM AIR RETURN FROM ENCLOSURE
④ COOL AIR OUTLET TO ENCLOSURE

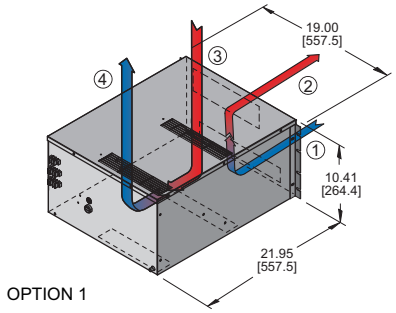

OPTION 1

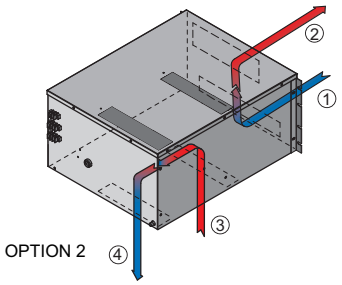
OPTION 2

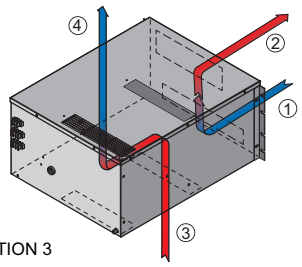
OPTION 3

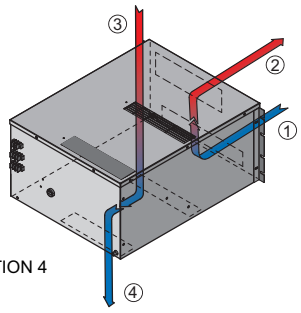
OPTION 4

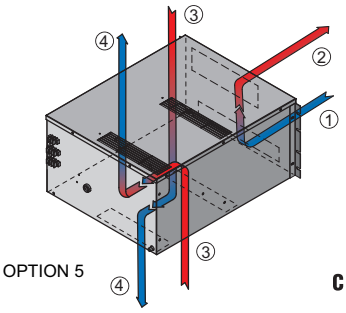
OPTION 5

PERFORMANCE CHART
K_A4C5RML

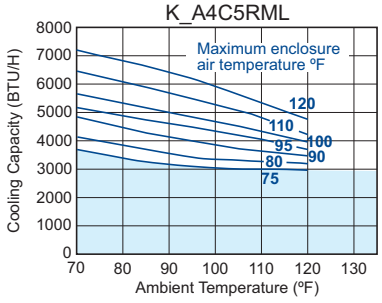

Operation within shaded areas not recommended.

Dimensions, inches [mm], are for reference only and subject to change.

PERFORMANCE CHARTS
KA4C3.5H_R

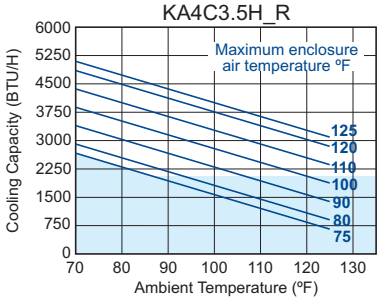

Operation within shaded areas not recommended.

H9 & H10

Recommended replacement: *RML Series*

Model	BTU/H Capacity	95/95 Rating BTU/H	Ambient Temp. ºF Max./Min.	Ambient Temp. ºC Max./Min.	Volts	Hz	* Running Amps	Fuse Size (Amps)	Approx. Weight lbs	Approx. Weight kg
KA4C3.5H9R	3500	3516	120/50	49/10	115/100	60/50	10.0	15	95	43
K2A4C3.5H9R	3500	3137	125/50	49/10	230/200	60/50	5.1	15	95	43

* Rating shown is for operation at maximum ambient temperature.

Many popular units are available as 3D solid models for customer system integration. Please contact Kooltronic for details.

H9

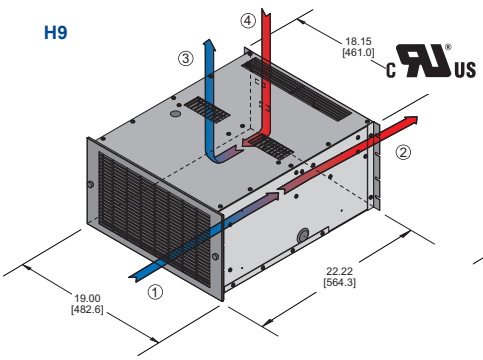

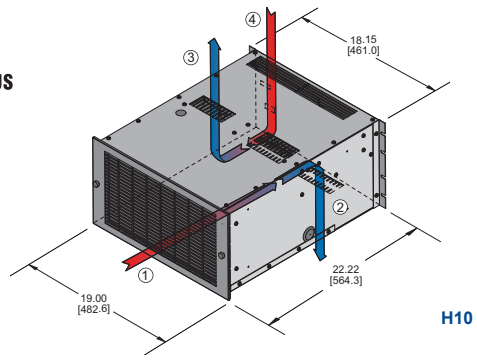

H10

All dimensions shown on H10 are typical.
Dimensions, inches [mm], are for reference only and subject to change.

HORIZONTAL AIR-COOLED TOP-MOUNTED AIR CONDITIONERS

DESCRIPTION

KOOLTRONIC ***Horizontal Top-Mounted Air Conditioners*** provide a full range of cooling capacities where space or other limitations prevent panel or internal rack mounting.

This line of ***Top-Mounted Air Conditioners*** offers five series of models, from 2,500 to 12,000 BTU/H, in five sizes. They feature specially designed, heavy-duty centrifugal blowers or fans (Horizontal Super Mini Series) to force the cooling air throughout the enclosure.

The low profile ***Horizontal Super-Mini*** or ***Compact Series*** are recommended for lower to moderate-demand cooling applications in smaller enclosures.

For more demanding applications, or for larger or denser enclosures, the ***Compact Plus Series*** is preferred. This series provides 5,000 BTU/H performance for medium-size enclosures and a choice of two heat-laden ambient air discharges.

The largest model of the ***Horizontal Top-Mounted Series*** has a capacity of 12,000 BTU/H.

Outdoor or corrosive environments require weather protection and/or special internal and external protective features.

For extreme ambient temperatures and/or severely contaminated environments, the use of ***Water-Cooled Air Conditioners*** or ***Water-Cooled Heat Exchangers*** is recommended.

General specifications common to all KOOLTRONIC Air Conditioners are on the first page of this section.

KOOLTRONIC also designs and manufactures a variety of air conditioners to meet *unique* specifications. We invite your inquiries about our modification and custom-design capabilities.

CALL 1-800-321-KOOL (5665)
or FAX 609-466-1114



Many popular units are available as 3D solid models for customer system integration. Please contact Kooltronic for details.

TOP-MOUNTED

STANDARD FEATURES

- All models are UL/CUL Listed or Recognized
- Built-in Condensate Evaporator
- CFC-Free Refrigerant
- Filter
- Heavy-duty Steel Shell with Baked Powder Finish
- Occupies no internal enclosure space
- Six foot [1.8m] (minimum) 3-wire power cord
- Thermostatic Low Temperature Control

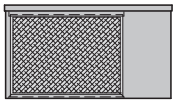

Horizontal Super-Mini
2,500 BTU/H
9"H x 14"W x 16"D

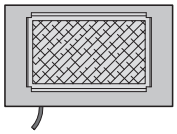

Compact
4,000 BTU/H
10"H x 17"W x 20"D

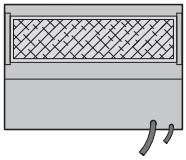

Compact Plus
5,000 BTU/H
12"H x 17"W x 22"D

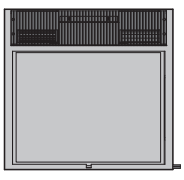

Full Size
12,000 BTU/H
17"H x 18"W x 31"D

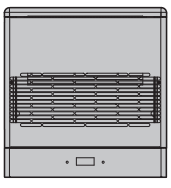

RTL
6,000-12,000 BTU/H
18"H x 17"W x 26"D

HORIZONTAL SUPER-MINI



Model	BTU/H Rating	95/95 Rating BTU/H	Ambient Temp. °F Max./Min.	Ambient Temp. °C Max./Min.	Volts	Hz	* Running Amps	Fuse Size (Amps)	Approx. Weight lbs	Approx. Weight kg
KA4C2.5HSR	2500	2085	125/50	52/10	115/100	60/50	7.4	15	58	26
K2A4C2.5HSR	2500	2356	125/50	52/10	230/200	60/50	3.0	15	58	26

* Rating shown is for operation at maximum ambient temperature.

STANDARD FEATURES

- Baked Powder Finish
- Built-in Condensate Evaporator
- CFC-Free Refrigerant
- Closed-Loop Cooling
- Compressor Short Cycle Protector
- Epoxy-Coated Coils
- Filter
- Low Ambient Kit
- NEMA 12 Rating Maintained
- Programmable Temperature Alarm
- Programmable Thermostat
- UL/CUR Recognized

ACCESSORIES AND OPTIONS

	Page
Filter Recoating Adhesive	86
Internal Corrosion Protection	86
Lifting Eyes	86
Remote Monitoring	86
Remote Thermostat Relay	86
Replacement Filters	88
Special controls or indicators	✦
Special materials or finishes	✦
Special motors, line cords or connectors	✦
Stainless or Aluminum Shell	86

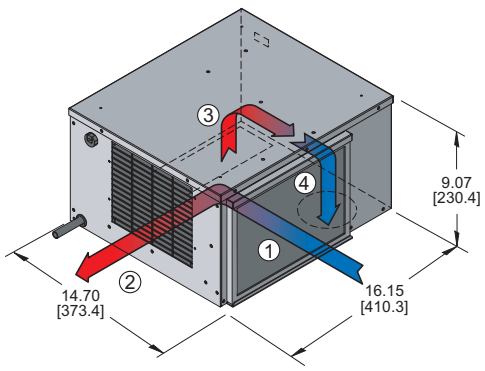

PERFORMANCE CHART

KA4C2.5HSR

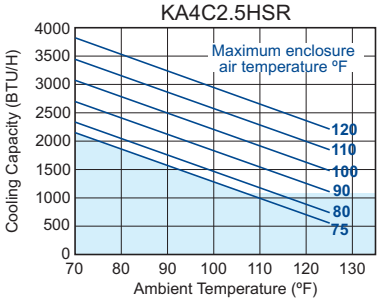

Operation within shaded area not recommended.

MOUNTING PLAN

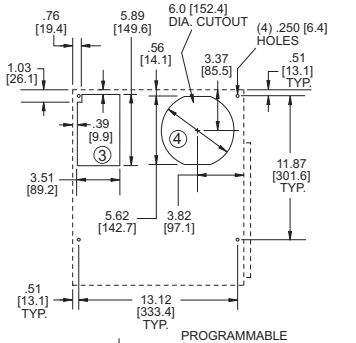

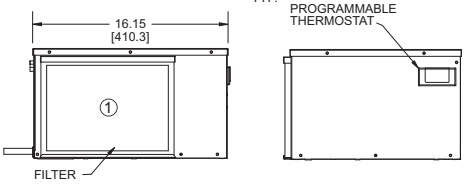

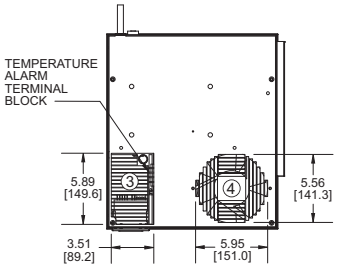

① FILTERED CONDENSER AIR INLET (Ambient Air In)

② CONDENSER OUTLET (Warm Ambient Air Out)

③ WARM AIR RETURN FROM ENCLOSURE

④ COOL AIR OUTLET TO ENCLOSURE

Many popular units are available as 3D solid models for customer system integration. Please contact Kooltronic for details.

Dimensions, inches [mm], are for reference only and subject to change.

✦ Contact KOOLTRONIC for information.

TOP-MOUNTED

COMPACT SERIES

Model	BTU/H Rating	95/95 Rating	Ambient Temp. °F Max./Min.	Ambient Temp. °C Max./Min.	Volts	Hz	* Running Amps	Fuse Size (Amps)	Approx. Weight lbs	Approx. Weight kg
KA4C4HTL	4000	3442	122/50	50/10	115/100	60/50	10.0	15	85	39
K2A4C4HTL	4000	2984	125/50	52/10	230/200	60/50	5.0	15	85	39

* Rating shown is for operation at maximum ambient temperature.

STANDARD FEATURES

- Built-in Condensate Evaporator
- CFC-Free Refrigerant
- Closed-Loop Cooling
- Compressor Short Cycle Protector
- Filter
- Low Ambient Kit
- Programmable Temperature Alarm
- Programmable Thermostat
- UL/CUL Recognized

ACCESSORIES AND OPTIONS

	Page
Filter Recoating Adhesive	86
Internal Corrosion Protection	86
Lifting Eyes	86
Remote Monitoring	86
Remote Thermostat Relay	86
Replacement Filters	88
Special controls or indicators	✦
Special materials or finishes	✦
Special motors, line cords or connectors	✦
Stainless or Aluminum Shell	86



PERFORMANCE CHART

KA4C4HTL

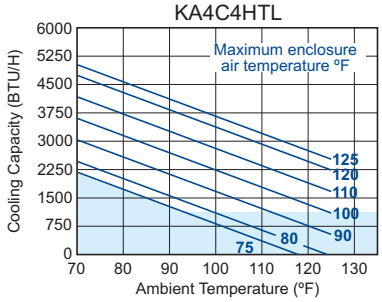

Operation within shaded area not recommended.

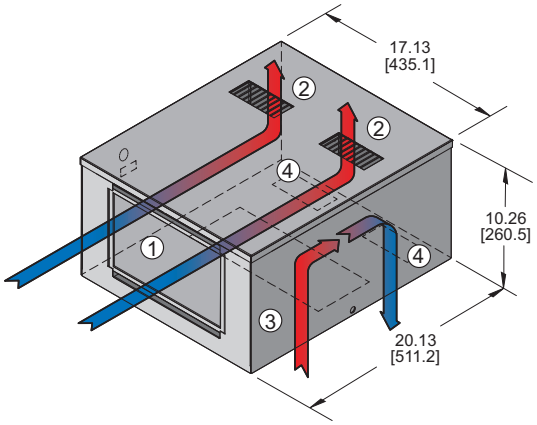

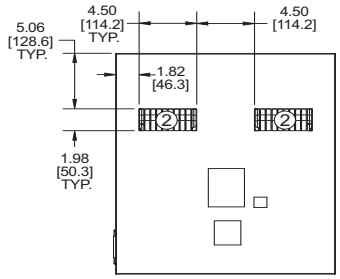

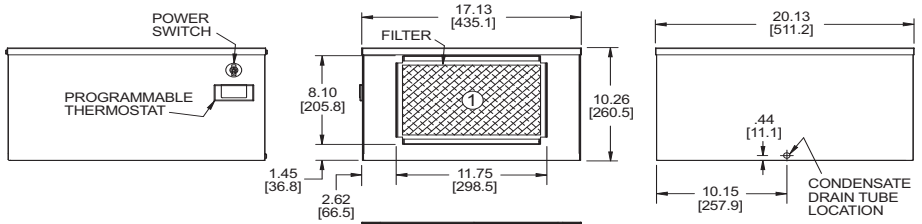

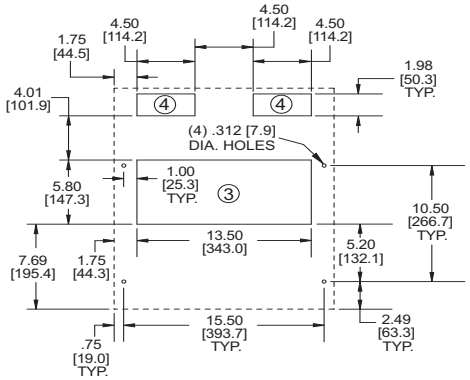

MOUNTING PLAN

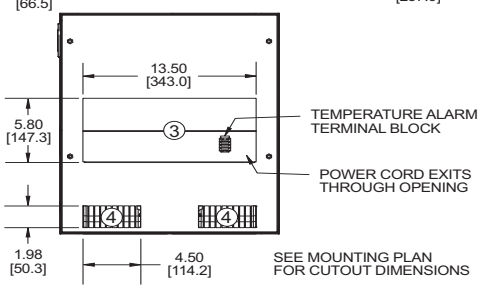

① FILTERED CONDENSER AIR INLET (Ambient Air In)

② CONDENSER OUTLET (Warm Ambient Air Out)

③ WARM AIR RETURN FROM ENCLOSURE

④ COOL AIR OUTLET TO ENCLOSURE

Many popular units are available as 3D solid models for customer system integration. Please contact Kooltronic for details.

Dimensions, inches [mm], are for reference only and subject to change.

✦ Contact KOOLTRONIC for information.

TOP-MOUNTED

COMPACT PLUS SERIES



Model	BTU/H Rating	95/95 Rating	Ambient Temp. °F Max./Min.	Ambient Temp. °C Max./Min.	Volts	Hz	* Running Amps	Approx. Weight lbs	kg
KA4C5.0H5R	5000	3500	125/50	47/10	115/100	60/50	16.5	95	43
K2A4C5.0H5R	5000	3500	115/50	52/10	230/200	60/50	9.2	95	43

* Rating shown is for operation at maximum ambient temperature.

STANDARD FEATURES

- Built-in Condensate Evaporator
- CFC-Free Refrigerant
- Filter
- Low Temperature Control Thermostat
- Reversible Condenser Inlet Filter
- UL/CUL Recognized▾

ACCESSORIES AND OPTIONS

	Page
Brackets for Rack Mounting	✦
Compressor Short Cycle Protector	87
Enclosure Heater	86
Filter Recoating Adhesive	86
Internal Corrosion Protection	90
Lifting Eyes	86
Low Airflow Detector	86
Low Ambient Kit	86
Remote Thermostat Relay	86
Replacement Filters	88
Side Mounting Rails	✦
Special controls or indicators	✦
Special materials or finishes	✦
Special motors, line cords or connectors	✦
Stainless or Aluminum Shell	86
Temperature Alarm	86

Many popular units are available as 3D solid models for customer system integration. Please contact Kooltronic for details.

PERFORMANCE CHARTS

KA4C4.2H5R

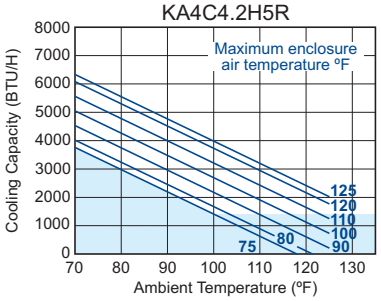

KA4C5.0H5R

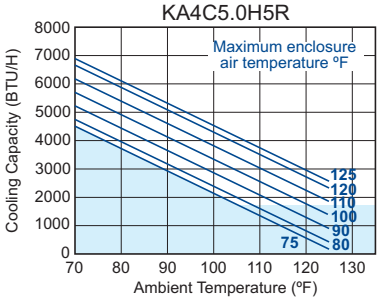

Operation within shaded areas not recommended.

MOUNTING PLAN

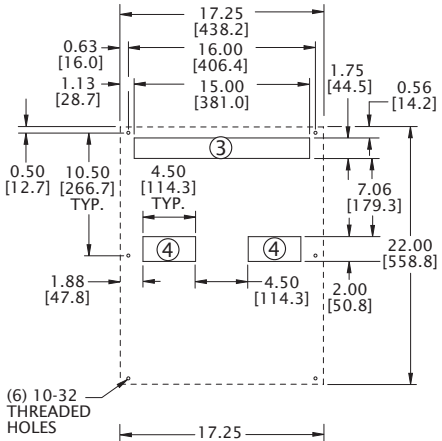

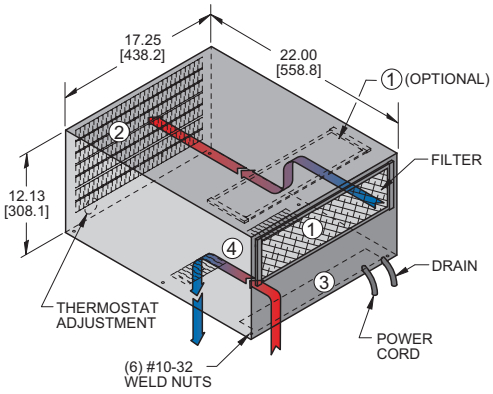

1. FILTERED CONDENSER AIR INLET (Ambient Air In)
2. CONDENSER OUTLET (Warm Ambient Air Out)
3. WARM AIR RETURN FROM ENCLOSURE
4. COOL AIR OUTLET TO ENCLOSURE

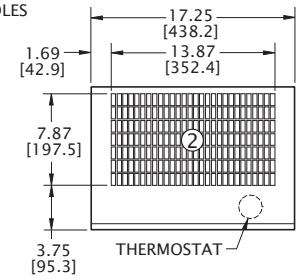

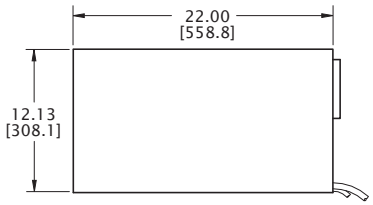

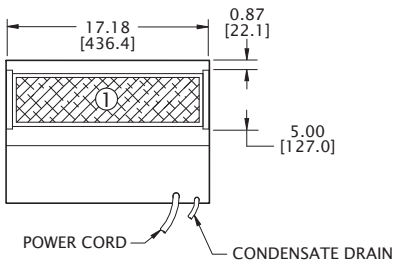

Dimensions, inches [mm], are for reference only and subject to change.

✦ Contact KOOLTRONIC for information.

FULL-SIZE SERIES

Model	BTU/H Rating	95/95 Rating	Ambient Temp. °F Max./Min.	Ambient Temp. °C Max./Min.	Volts	Hz	* Running Amps	Approx. Weight lbs	Approx. Weight kg
K2A6C12HTL	12000	11500	125/-20	52/-28	230	60/50	12.0/12.0	152	69
K2A6C12HTL	12000	11500	125/-20	52/-28	208	60	13.4	152	69

* Rating shown is for operation at maximum ambient temperature.



STANDARD FEATURES

- Built-in Condensate Evaporator
- Closed-Loop Cooling
- Condensate Blower Controller
- Filter
- High Refrigerant Temperature Protection
- Low Temperature Control Thermostat
- NEMA 1 Rating Maintained (UL50)
- UL/CUL Listed
- Zero ODP Refrigerant

ACCESSORIES AND OPTIONS

	Page
Compressor Short Cycle Protector	87
Enclosure Heater	86
Filter Recoating Adhesive	86
Remote Thermostat Relay	86
Replacement Filters	88
Special controls or indicators	✦
Special materials or finishes	✦
Special motors, line cords or connectors	✦
Stainless or Aluminum Shell	86
Temperature Alarm	86

PERFORMANCE CHART

K2A6C12HTL

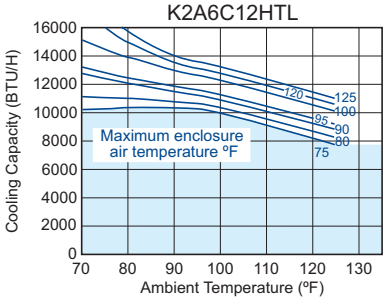

Operation within shaded area not recommended.

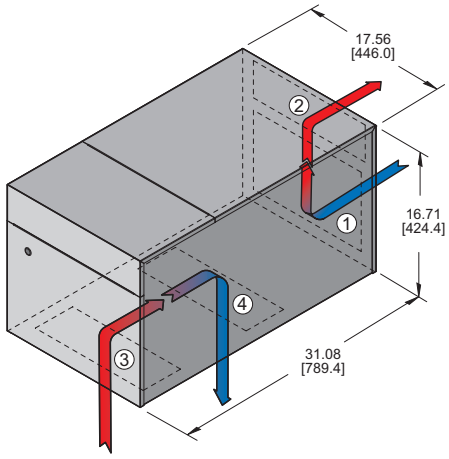

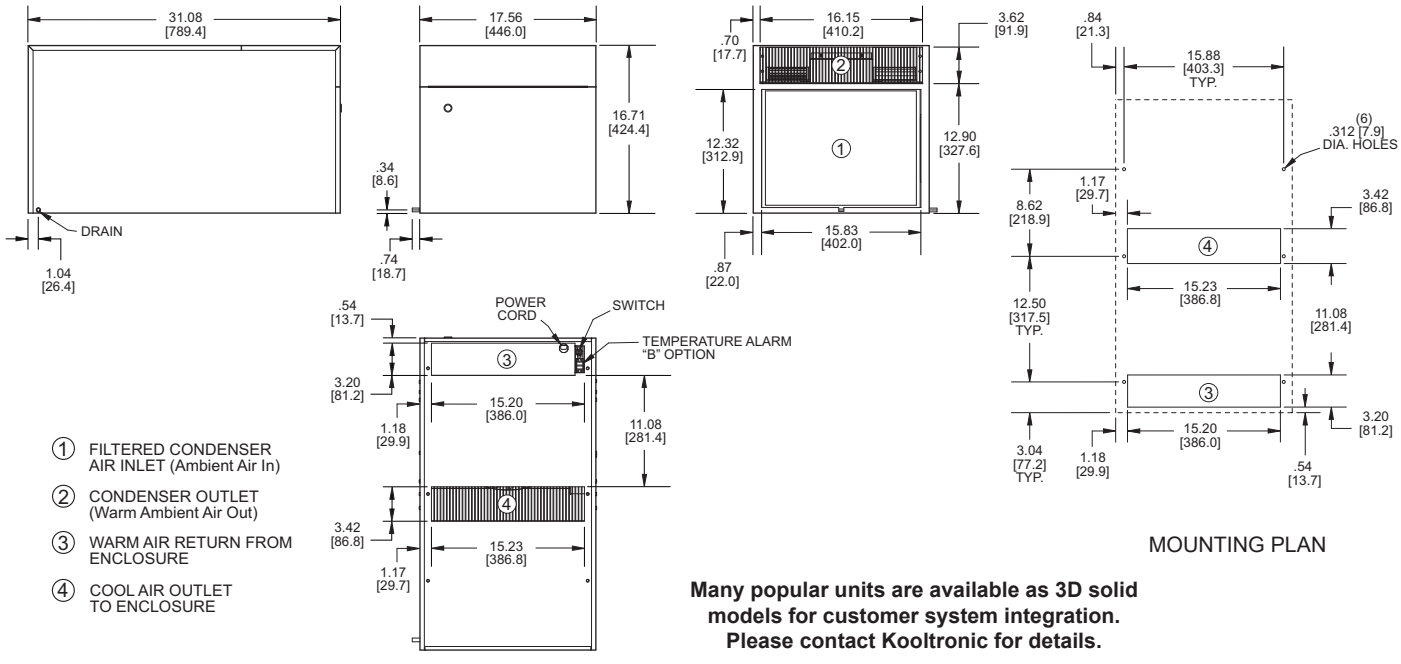

① FILTERED CONDENSER AIR INLET (Ambient Air In)

② CONDENSER OUTLET (Warm Ambient Air Out)

③ WARM AIR RETURN FROM ENCLOSURE

④ COOL AIR OUTLET TO ENCLOSURE

MOUNTING PLAN

Many popular units are available as 3D solid models for customer system integration. Please contact Kooltronic for details.

Dimensions, inches [mm], are for reference only and subject to change.

▼ UL/CUL Listed models are available at added cost. ✦ Contact KOOLTRONIC for information.

RACK-MOUNTED

ADVANTAGE SERIES INDOOR/OUTDOOR TOP-MOUNT AIR CONDITIONERS



Model	BTU/H Rating	95/95 Rating	Ambient Temp. ºF Max./Min.	Volts	Hz	* Cooling Amps	* Heating Amps	Approx. Weight lbs	kg
KA4C6RTL	6000	4600	125/0	115/100	60/50	14.6/14.3	8.0/14.6	131	59
K2A4C6RTL	6000	4600	120/0	230/208	60	6.3/7.0	4.0/7.5	131	59
K2A4C6RTL	6000	4600	120/0	220/200	50	5.6/6.0	4.0/7.5	131	59

* Rating shown is for operation at maximum ambient temperature.

c UL us **NEMA** TYPE 12 & 3R MAINTAINED

STANDARD FEATURES

- CFC-Free Refrigerant
- Closed-Loop Cooling
- Digital Temperature Display
- Filter
- Head Pressure Control
- Low Ambient Kit
- Low Temperature Control Thermostat
- NEMA 12 & 3R Ratings Maintained (UL50)
- Painted Metal Grille
- UL/CUL Listed

ACCESSORIES AND OPTIONS

	Page
■ Compressor Short Cycle Protector	87
■ Enclosure Heater	86
■ Filter Recoating Adhesive	86
■ Internal Corrosion Protection	86
■ Remote Thermostat Relay	86
■ Replacement Filters	88
■ Special controls or indicators	✦
■ Special materials or finishes	✦
■ Special motors, line cords or connectors	✦
■ Stainless or Aluminum Shell	86
■ Temperature Alarm	86

PERFORMANCE CHART

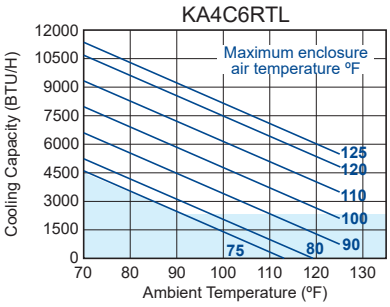

Operation within shaded area not recommended.

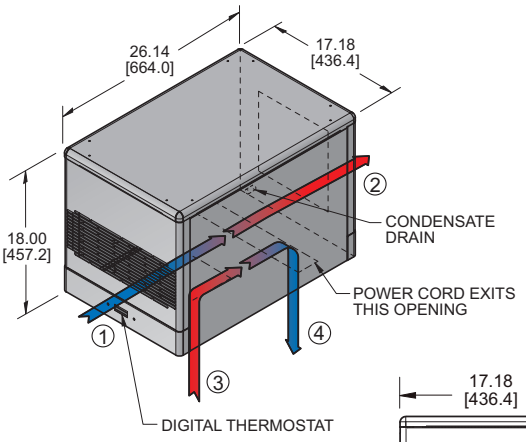

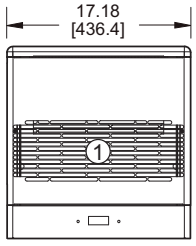

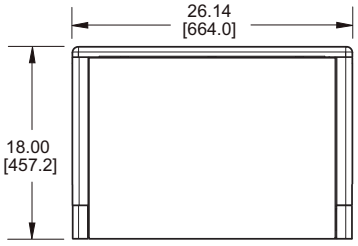

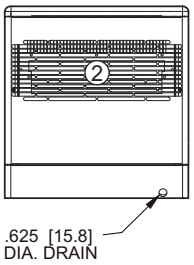

① FILTERED CONDENSER AIR INLET (Ambient Air In)

② CONDENSER OUTLET (Warm Ambient Air Out)

③ WARM AIR RETURN FROM ENCLOSURE

④ COOL AIR OUTLET TO ENCLOSURE

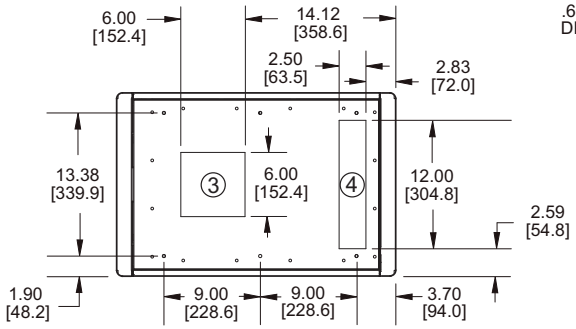

Many popular units are available as 3D solid models for customer system integration. Please contact Kooltronic for details.

Dimensions, inches [mm], are for reference only and subject to change.

✦ Contact KOOLTRONIC for information.

TOP-MOUNTED

TRIMLINE WATER-COOLED PANEL-MOUNTED AIR CONDITIONERS

DESCRIPTION

Cool circulating water has greater heat-removal capacity than warm ambient air.

KOOLTRONIC ***Water-Cooled Air Conditioners*** are recommended for applications with extreme ambient temperatures and/or severely contaminated environments, if a reliable supply of cool, clean water is available.

Since ambient air is sealed out of the air conditioner as well as the enclosure, no contaminants can enter and there are no filters to clean.

These units contain a regulating valve that automatically adjusts the condenser waterflow rate for water temperature and/or cooling load changes. When the air conditioner is shut off, the valve closes, cutting off the water supply to the unit.

Should the water supply become inadequate for any reason, the built-in Excess Pressure Control senses the increased compressor discharge pressure and turns off the unit. For added protection, the switch must be reset manually after the waterflow problem has been corrected.

Sized interchangeably with the ***TrimLine Air-Cooled Panel-Mounted Series***, these units can be installed either fixed or hinged to any vertical enclosure panel or door. They retain the closed-loop design and gasketed mounting features, to seal out contaminants and protect the electronics.

General specifications common to all KOOLTRONIC Air Conditioners are on the first page of this section.

KOOLTRONIC also designs and manufactures a variety of air conditioners to meet *unique* specifications. We invite your inquiries about our modification and custom-design capabilities.

CALL 1-800-321-KOOL (5665)
or FAX 609-466-1114

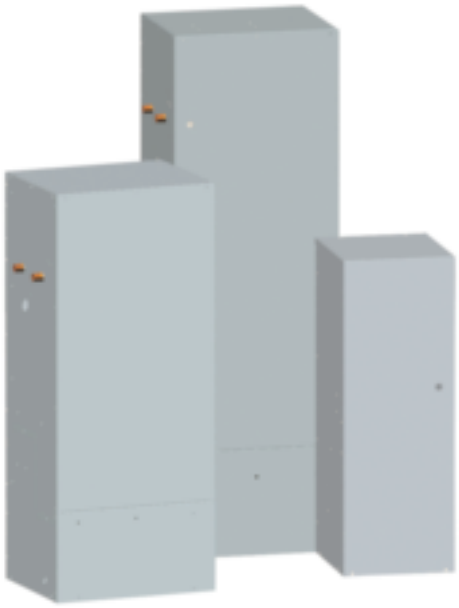

Many popular units are available as 3D solid models for customer system integration. Please contact Kooltronic for details.

WATER-COOLED

STANDARD FEATURES

- All Models UL/CSA Recognized components
- CFC-free Refrigerant
- Compact design with slim 10", 12" and 15" wide mounting footprints
- Heavy-duty Steel Shell with Baked Powder Finish
- Protective waterflow controls
- Six foot [1.8m] (minimum) 3-wire power cord
- Suitable for extreme environments
- Thermostatic Low Temperature Control
- Versatile mounting locations

Products in red are legacy products. Legacy products are no longer in normal production. Consult factory for availability.

Recommended replacement: See *Guardian/GuardianX or Slimkool Series*

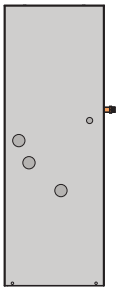

WNP28
4,000 BTU/H
28"H x 10"W x 11"D

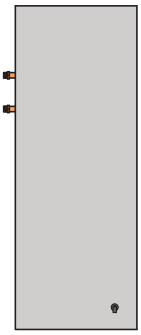

WNP33
4,000 BTU/H
33"H x 12"W x 9"D

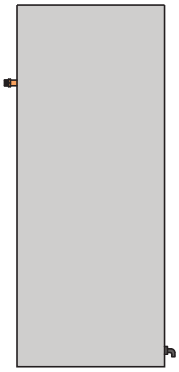

WNP36
4,000 & 6,000
BTU/H
37"H x 15"W x 12"D

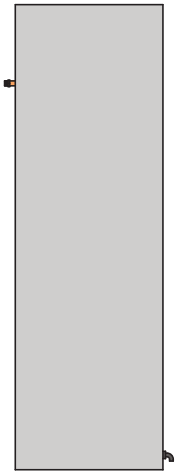

WNP47
7,000 & 12,000
BTU/H
47"H x 15"W x 12"D

WNP28 TRIMLINE WATER-COOLED PANEL-MOUNTED AIR CONDITIONERS

Products in red are legacy products. Legacy products are no longer in normal production. Consult factory for availability.

Recommended replacement: See *Guardian/GuardianX or Slimkool Series*



Model	BTU/H Rating	Water Flow (GPM) @85ºF Max.▾	Volts	Hz	* Running Amps	Approx. Weight lbs	kg
KA4C4WNP28	4000	1.0	115/100	60/50	10.4	85	39
K2A4C4WNP28	4000	1.0	230/200	60/50	5.4	85	39

* Rating shown is for operation at maximum water temperature.

STANDARD FEATURES

- CFC-Free Refrigerant
- Excess Pressure Control
- Low Temperature Control Thermostat
- Water Regulating Valve

ACCESSORIES AND OPTIONS

	Page
■ Adapter	86
■ Compressor Short Cycle Protector	86
■ Enclosure Heater	86
■ High-Capacity Condensate Evaporator	87
■ Internal Corrosion Protection	86
■ Lifting Eyes	86
■ Low Airflow Detector	86
■ Remote Thermostat Relay	86
■ Special controls or indicators	✦
■ Special materials or finishes	✦
■ Special motors, line cords or connectors	✦
■ Stainless Steel Shell	86
■ Temperature Alarm	86

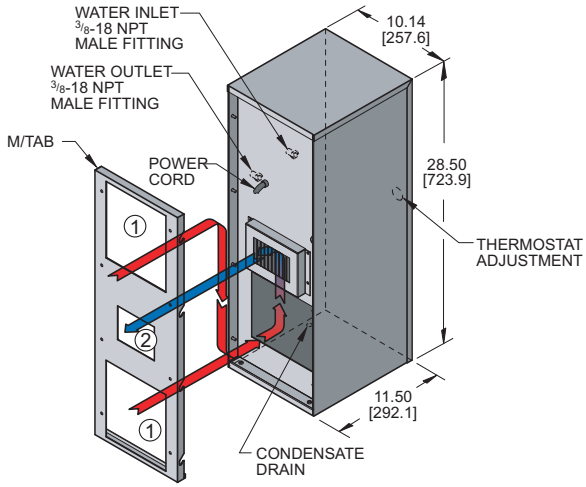

Many popular units are available as 3D solid models for customer system integration. Please contact Kooltronic for details.

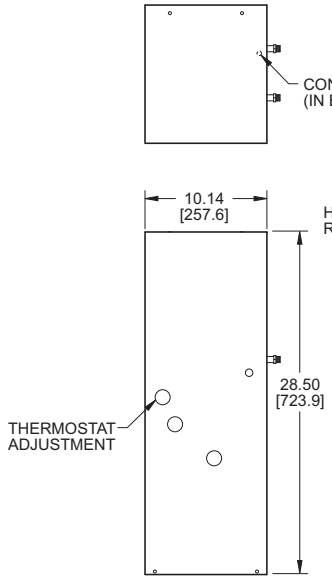

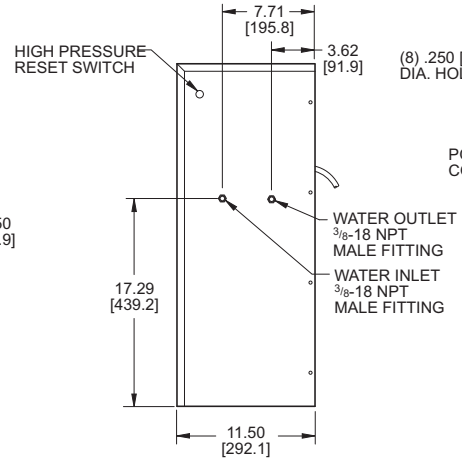

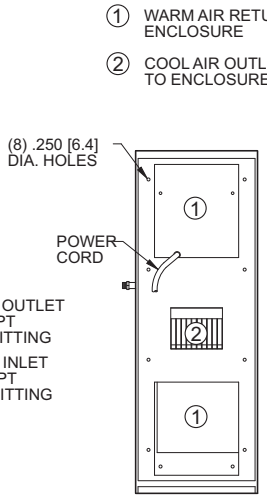

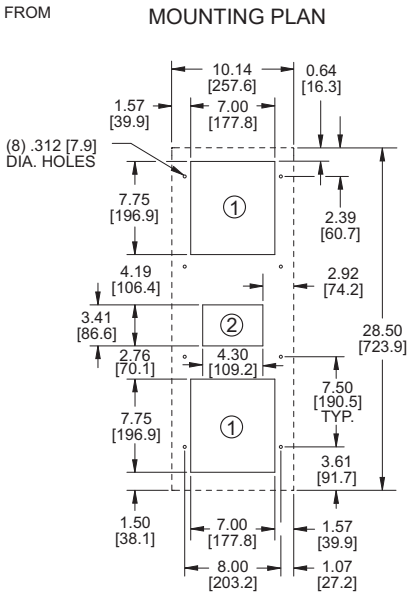

Dimensions, inches [mm], are for reference only and subject to change.

▾ Rated for full capacity load at 85ºF water. Usage will vary at lower load or cooler water conditions.

✦ Contact KOOLTRONIC for information.

WNP33 TRIMLINE WATER-COOLED PANEL-MOUNTED AIR CONDITIONERS

Products in red are legacy products. Legacy products are no longer in normal production. Consult factory for availability.

Recommended replacement: See *Guardian/GuardianX or Slimkool Series*

Model	BTU/H Rating	Water Flow (GPM) @85ºF Max.▾	Volts	Hz	* Running Amps	Approx. Weight lbs	kg
KA4C4WNP33	4000	1.0	115/100	60/50	10.4	85	39
K2A4C4WNP33	4000	1.0	230/200	60/50	5.4	85	39

* Rating shown is for operation at maximum water temperature.



STANDARD FEATURES

- CFC-Free Refrigerant
- Closed-Loop Cooling
- Excess Pressure Control
- Low Temperature Control Thermostat
- Water Regulating Valve

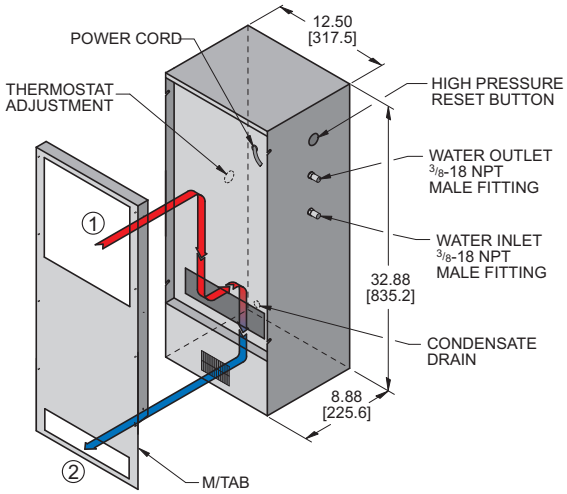

ACCESSORIES AND OPTIONS

	Page
■ Adapter	86
■ Compressor Short Cycle Protector	86
■ Condenser Access Panel	86
■ Enclosure Heater	86
■ High-Capacity Condensate Evaporator	87
■ Internal Corrosion Protection	86
Lifting Eyes	86
■ Low Airflow Detector	86
■ Mounting Hinge	86
■ Remote Thermostat Relay	86
■ Special controls or indicators	✦
■ Special materials or finishes	✦
■ Special motors, line cords or connectors	✦
■ Stainless Steel Shell	86
■ Temperature Alarm	86

Many popular units are available as 3D solid models for customer system integration. Please contact Kooltronic for details.

MOUNTING PLAN

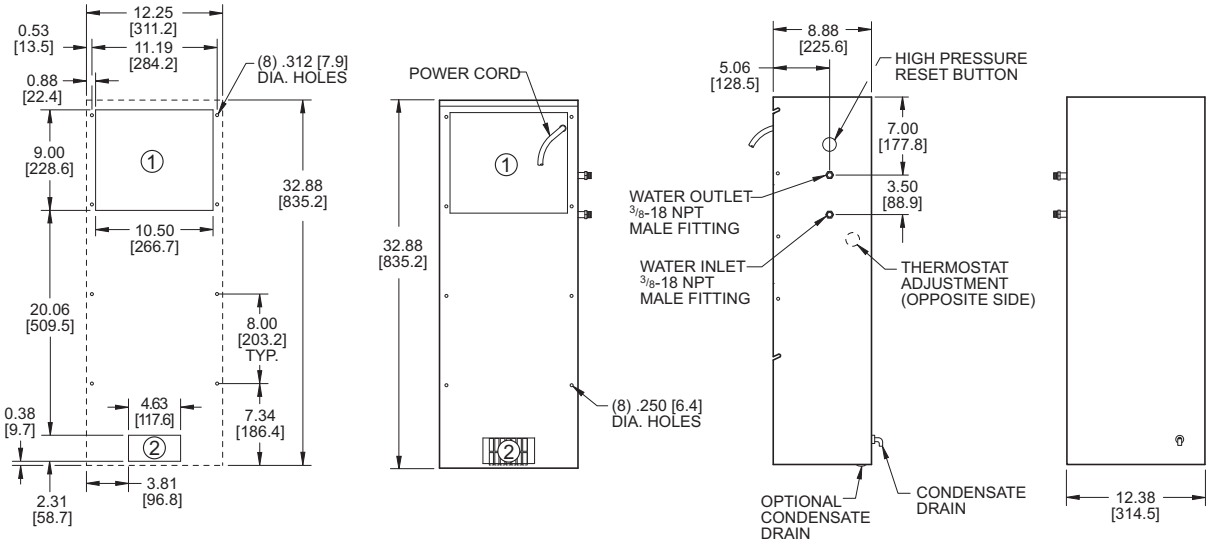

Dimensions, inches [mm], are for reference only and subject to change.

▾ Rated for full capacity load at 85ºF water. Usage will vary at lower load or cooler water conditions.

✦ Contact KOOLTRONIC for information.

WNP36 TRIMLINE WATER-COOLED PANEL-MOUNTED AIR CONDITIONERS

Model	BTU/H Rating	Water Flow (GPM) @85ºF Max.▾	Volts	Hz	* Running Amps	Approx. Weight lbs	kg
KA4C6WNP36	6000	1.5	115/100	60/50	11.8	125	57
K2A4C6WNP36	6000	1.5	230/200	60/50	6.8	125	57

* Rating shown is for operation at maximum water temperature.
230V models with Short Cycle Protector are not RoHS compliant.



STANDARD FEATURES

- CFC-Free Refrigerant
- Closed-Loop Cooling
- Excess Pressure Control
- Low Temperature Control Thermostat
- Water Regulating Valve

ACCESSORIES AND OPTIONS

	Page
■ Adapter	86
■ Compressor Short Cycle Protector	86
■ Condenser Access Panel	86
■ Enclosure Heater	86
■ High-Capacity Condensate Evaporator	87
■ Internal Corrosion Protection	86
■ Lifting Eyes	86
■ Low Airflow Detector	86
■ Mounting Hinge	86
■ Remote Thermostat Relay	86
■ Special controls or indicators	✦
■ Special materials or finishes	✦
■ Special motors, line cords or connectors	✦
■ Stainless Steel Shell	86
■ Temperature Alarm	86

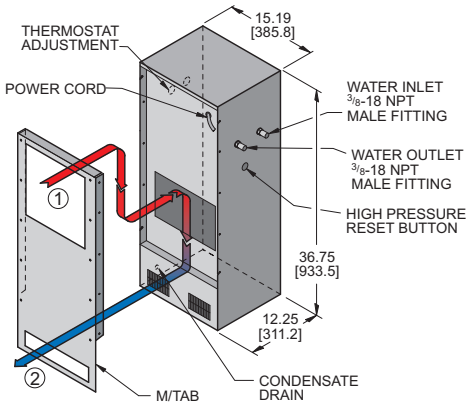

Many popular units are available as 3D solid models for customer system integration. Please contact Kooltronic for details.

MOUNTING PLAN

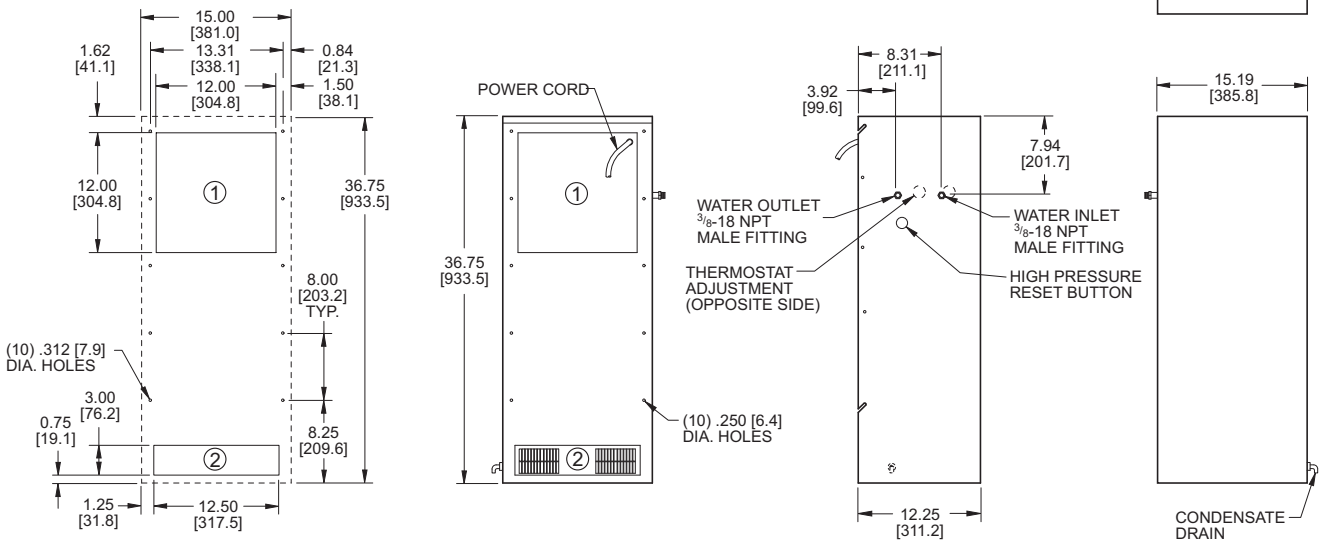

Dimensions, inches [mm], are for reference only and subject to change.

▾ Rated for full capacity load at 85ºF water. Usage will vary at lower load or cooler water conditions.

✦ Contact KOOLTRONIC for information.

WNP47 TRIMLINE WATER-COOLED PANEL-MOUNTED AIR CONDITIONERS

Model	BTU/H Rating	Water Flow (GPM) @85ºF Max.▾	Volts	Hz	* Running Amps	Approx. Weight lbs	kg
KA4C7WNP47	7000	2.0	115/100	60/50	12.0	160	73
K2A4C7WNP47	7000	2.0	230/200	60/50	7.0	160	73
K2A4C12WNP47	12000	2.5	230/200	60/50	9.6	160	73

* Rating shown is for operation at maximum water temperature.

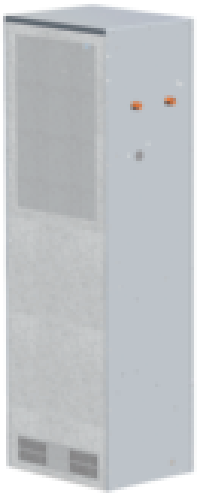

STANDARD FEATURES

- CFC-Free Refrigerant
- Closed-Loop Cooling
- Excess Pressure Control
- Low Temperature Control Thermostat
- Water Regulating Valve

ACCESSORIES AND OPTIONS

	Page
■ Adapter	86
■ Compressor Short Cycle Protector	86
■ Condenser Access Panel	86
■ Enclosure Heater	86
■ High-Capacity Condensate Evaporator	87
■ Internal Corrosion Protection	86
■ Lifting Eyes	86
■ Low Airflow Detector	86
■ Mounting Hinge	86
■ Remote Thermostat Relay	86
■ Special controls or indicators	✦
■ Special materials or finishes	✦
■ Special motors, line cords or connectors	✦
■ Stainless Steel Shell	86
■ Temperature Alarm	86

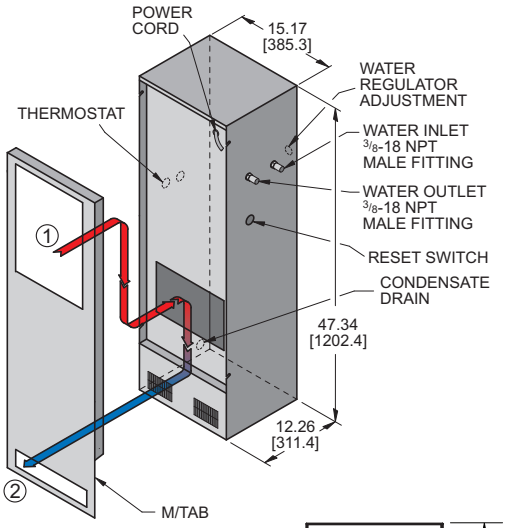

① WARM AIR RETURN FROM ENCLOSURE

② COOL AIR OUTLET TO ENCLOSURE

Many popular units are available as 3D solid models for customer system integration. Please contact Kooltronic for details.

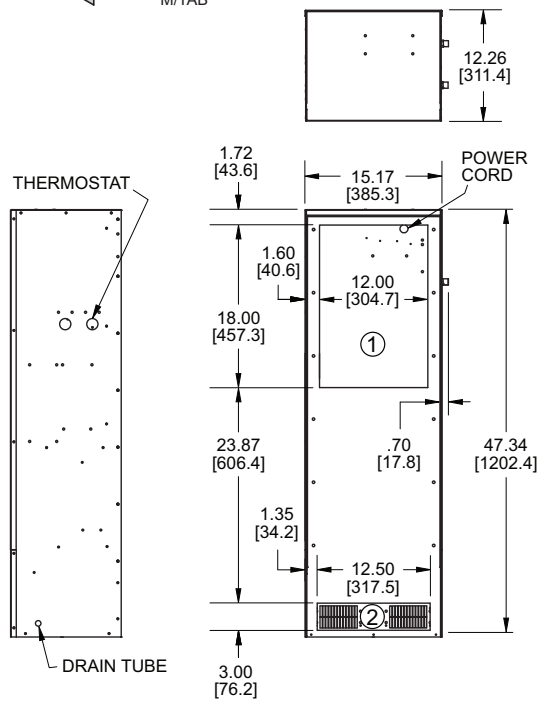

MOUNTING PLAN

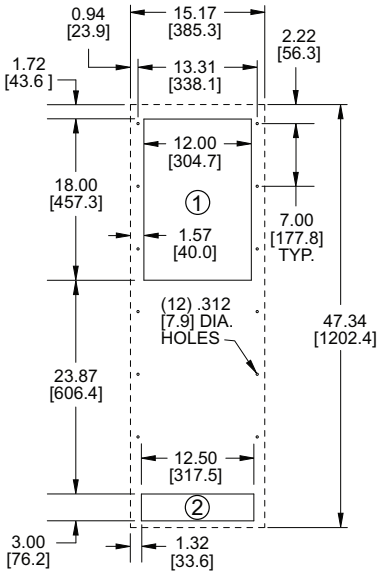

Dimensions, inches [mm], are for reference only and subject to change.

▾ Rated for full capacity load at 85ºF water. Usage will vary at lower load or cooler water conditions.

✦ Contact KOOLTRONIC for information.

AIR CONDITIONER ACCESSORIES AND OPTIONS

FACTORY-INSTALLED OPTIONS

ADAPTER: A plate or plenum needed to replace older Kooltronic or competitor units.

ALUMINUM SHELL: Where light weight and/or compatibility with appearance of aluminum enclosures are required. Unpainted Type 5052 is standard. Other types and ultraviolet-resistant baked powder finish are available.

COMPRESSOR SHORT CYCLE PROTECTOR: Protects the compressor from possible damage due to harmful short cycling, (frequent starting) where temperature controls enable the compressor to restart frequently or after a power interruption. These conditions could be due to low or fluctuating heat loads within the electrical enclosure or a power failure. The Compressor Short Cycle Protector will prevent the compressor from starting when it has been shut off for less than several minutes. By limiting the number of compressor starts per hour, the life of the compressor is prolonged. It is recommended where installations are subject to solar gain and or changes in the enclosure internal load due to the degree of usage of the equipment being cooled. It is also recommended where higher capacity units are specified in anticipation of the future addition of heat producing equipment being added to the enclosure.

CONDENSER ACCESS PANEL: Expressly designed for quick, convenient access to the condenser coil for easy cleaning and servicing. Recommended for units operating in dirty environments, the panel is easily removed and replaced by use of a few fasteners, without removal of the entire rear cover panel.

ENCLOSURE HEATER: Eliminates damaging condensation, increasing reliability of electrical enclosure components.

INTERNAL CORROSION PROTECTION: An air cured coating is sprayed on copper lines and brazed joints on the condenser side, providing a degree of protection from corrosive environments. This coating will withstand 1000 hours of salt spray per the ASTM B 117 test method. Also see Stainless Steel Cabinet or Integrity NEMA 4/4X Air Conditioners. **NOTE:** Severe operational environments such as waste water treatment and salt spray are likely to cause corrosion failure over a period of time regardless of coating. **Warranty:** Corrosive conditions may affect the warranty coverage. Consult factory for warranty limitations in corrosive environments. **NOTE:** For additional corrosion protection options, contact factory.

LIFTING EYES: Heavy-gauge steel lifting eyes, attached to the side panels, assist in positioning units.

LOW AIRFLOW DETECTOR: Similar to the Airflow Switch shown in the Blower Accessories Section, the switch is installed in a suitable location in the air conditioner to detect loss of airflow, and sends a signal to a terminal block, through which user-installed wiring and warning devices are activated.

LOW AMBIENT KIT: Maintains sufficient operating pressures when ambient temperatures drop below 50ºF. Includes a compressor heater and a pressure device that senses the reduced discharge pressure and modulates the condenser blower. Effective to a minimum ambient temperature of 0ºF.

MOUNTING HINGE: (Left-hand or Right-hand) Allows the air conditioner itself to be used as a cabinet door. (Caution: The cabinet must be able to support the full weight of the unit in open position). Specify left-hand or right-hand, determined by facing the mounting side of the air conditioner.

REMOTE MONITORING: An optional feature for models with Programmable Thermostat, Remote Monitoring provides temperatue data for warning of early action required, accomplished through a Hot Key connection from the Programmable Thermostat to a monitoring system (not supplied).

REMOTE THERMOSTAT RELAY: Used only with a user-installed remote thermostat, the 24VAC relay can be used with a lead lag control (see below) for the sequential operation of two units or with a single unit. An external terminal strip is provided for field interconnection. **NOTE:** A factory installed thermostat is not provided with this option.

STAINLESS STEEL SHELL: For applications in corrosive or other hostile environments such as those requiring Internal Corrosion Resistant Coatings, especially where chemical/moisture combinations are present.

TEMPERATURE ALARM: A thermostat is mounted inside the cabinet and attached to a sensor in the warm air return. When the air temperature increases to the set point, a signal is sent to a terminal block. User-installed wiring from the terminal block to local and/or remote warning devices (light, bell, siren, etc.) can be for normally open or closed operation.

CUSTOMER-INSTALLED ACCESSORIES

CONDENSATE EVAPORATOR: Heated add-on unit for air conditioners without built-in condensate evaporator system. Eliminates need for draining of condensate under normal operating conditions. May not be adequate in extremely high humidity with open or leaky enclosure.

FILTERS: See pages 86 and 87.

FILTER RECOATING ADHESIVE: This compound is a superior product for recoating filters after washing. The adhesives penetrate dirt layers to keep the filter surface tacky for longer effective performance between washings. Part No. A-16 - 10 ounce container.

AIR CONDITIONER ACCESSORIES AND OPTIONS (cont.)

WEATHER PROTECTION KIT: For outdoor installations subject to invasion by rain, snow or windblown dirt, special deflectors shield the condenser air inlet and outlet ports. Air conditioners or heat exchangers installed outdoors may also require special exterior paint. **NOTE:** Units using the Weather Protection Kit are not UL Listed.

HIGH-CAPACITY CONDENSATE EVAPORATOR: Condensate evaporator kits are available for attachment to the bottom of Micro-Mini, Air or Water Cooled Panel Mounted Air Conditioners, and Water-to-Air Heat Exchangers. Condensate is collected, vaporized and discharged to the surrounding air. All units include a safety overflow drain which discharges excessive condensate when required. Overflow may occur when cabinets are poorly sealed, or when cabinet doors are frequently opened, permitting the invasion of moisture-laden air. Built-In Condensate Evaporators are standard equipment on Kooltronic SlimLine Series, TrimLine Series, Horizontal Top-Mounted, Profile Series models and Guardian/GuardianX Series models.

UNIT APPLICATIONS

KCH20 & K2CH20 for use on Kooltronic Micro-Mini Air Conditioners.

KCH30 & K2CH30 for use on Kooltronic Panel Mount Air Conditioners and Water-to-Air Heat Exchangers.



ELECTRICAL REQUIREMENTS

KCH20	115 Volt	2.5 amps	50/60 Hz
K2CH20	230 Volt	1.2 amps	50/60 Hz
KCH30	115 Volt	2.6 amps	50/60 Hz
K2CH30	230 Volt	1.3 amps	50/60 Hz

- Voltage need not match Air Conditioner as long as unit is connected to a matching power source.
- 115 Volt units are furnished with NEMA 5-15 P plugs.
- 230 Volt units are furnished with NEMA 6-15 P plugs.

(For wiring directly to Air Conditioners, contact KOOLTRONIC)

CAPACITY

Units capable of evaporating up to 8 ounces of water per hour under normal operating conditions.

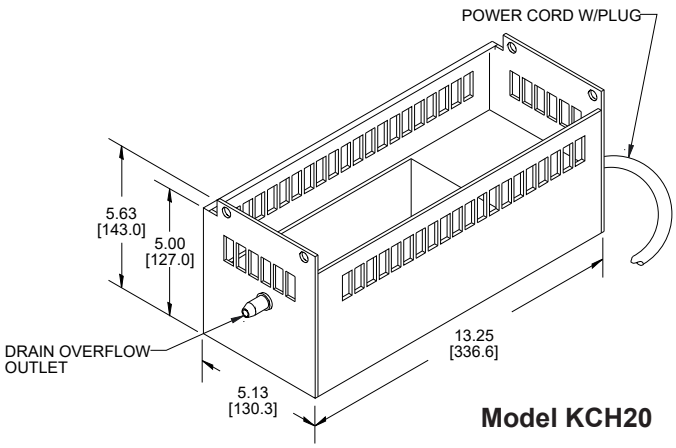

Model KCH20

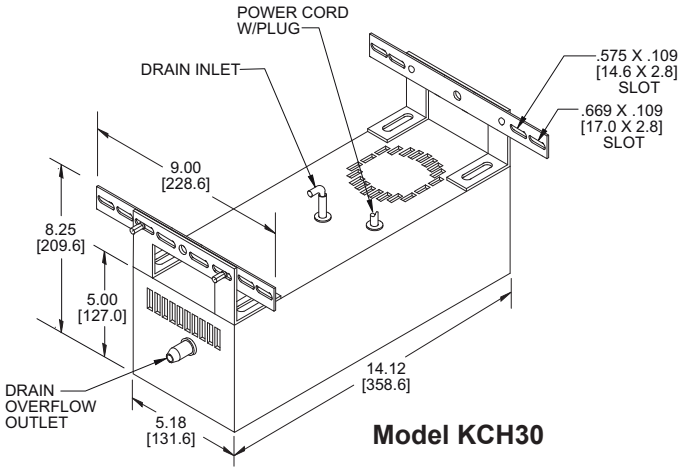

Model KCH30

Dimensions, inches [mm], are for reference only and subject to change.

ACCESSORIES & OPTIONS

FILTERS

REPLACEMENT FILTERS: All KOOLTRONIC filters consist of a multi-layer grid of sturdy corrugated aluminum, securely held in a one-piece aluminum frame. Filters are required wherever air is drawn into an electronics enclosure or related cooling equipment to keep internal parts as clean as possible. A non-drying adhesive coating traps a high percentage of particulate matter. These filters are reuseable, they may be washed and recoated with the appropriate filter recoating adhesive. Replacements are available for those which become damaged or otherwise non-serviceable.

Model	Filter P/N	Dimensions, inches** (H x W x D)	Dimensions, mm** (H x W x D)
Access			
DSP 23	681F	6.81 x 6.81 x 0.38	173.0 x 173.0 x 9.7
Advantage			
RP17	6501F	12.00 x 6.50 x 0.38	304.8 x 165.1 x 9.7
RP28	7006F	12.00 x 7.00 x 0.50	304.8 x 177.8 x 12.7
RP33	7006F	12.00 x 7.00 x 0.50	304.8 x 177.8 x 12.7
RP36	9121F	15.38 x 9.13 x 0.38	390.7 x 231.9 x 9.7
RP47	9622F	15.38 x 9.63 x 0.38	390.7 x 244.6 x 9.7
RP52▼	11751F	16.75 x 11.75 x 0.38	425.5 x 298.5 x 9.7
RP55▼	11631F	11.63 x 21.63 x 0.38	295.4 x 549.4 x 9.7
Guardian/GuardianX			
DP15	525F	5.25 x 6.44 x 0.09	133.3 x 112.8 x 2.3
DP21	8388F	8.38 x 8.883 x 0.38	212.8 x 225.5 x 9.7
DP24	8388F	8.38 x 8.883 x 0.38	212.8 x 225.5 x 9.7
DP33	9501F	9.50 x 10.50 x 0.38	241.3 x 266.7 x 9.7
DP43	8001F	8.00 x 16.00 x 0.38	203.2 x 406.4 x 9.7
DP47	8001F	8.00 x 16.00 x 0.38	203.2 x 406.4 x 9.7
DP50 - (Qty. 2)	13658F	13.63 x 5.88 x 0.38	346.2 x 149.4 x 9.7
DP53 - (Qty. 2)	6382F	16.88 x 6.38 x 0.38	428.8 x 162.0 x 9.7
DP60 - (Qty. 2)	19381F	19.38 x 9.25 x 0.38	492.2 x 235.0 x 9.7
Guardian/GuardianX 480 Volt			
DP24	8388F	8.38 x 8.883 x 0.38	212.8 x 225.5 x 9.7
DP38	11001F	11.00 x 8.00 x 0.50	279.4 x 203.2 x 12.7
DP50	13658F	13.63 x 5.88 x 0.38	346.2 x 149.4 x 9.7
DP52 - (Qty. 2)	8001F	8.00 x 16.00 x 0.38	203.2 x 406.4 x 9.7
DP53 - (Qty. 2)	6382F	16.88 x 6.38 x 0.38	428.8 x 162.0 x 9.7
DP60 - (Qty. 2)	19381F	19.38 x 9.25 x 0.38	492.2 x 235.0 x 9.7
Hazardous Location 4/4X			
HL28LV	9512F	9.50 x 12.00 x 0.38	241.4 x 304.8 x 9.7
HL40LV	19501F	11.25 x 19.50 x 0.38	285.7 x 495.3 x 9.7
HL48LV	19502F	26.50 x 11.25 x 0.38	673.1 x 285.7 x 9.7
HL56LV	1524F	15.75 x 24.75 x 0.38	400.0 x 628.6 x 9.7
HL58LV	1925F	19.75 x 25.00 x 0.38	501.7 x 635.0 x 9.7
HL60LV	2023F	27.75 x 20.38 x 0.34	704.8 x 517.6 x 8.6
Integrity NEMA 4/4X			
Series 21	9501F	9.50 x 10.50 x 0.38	241.3 x 266.7 x 9.7
Series 32	650F	8.38 x 8.38 x 0.50	212.9 x 212.9 x 12.7
	8751F	16.63 x 8.38 x 0.50	422.4 x 212.9 x 12.7
Series 38	16001F*	16.63 x 10.50 x 0.50	422.4 x 266.7 x 12.7
Series 47	16001F*	16.63 x 10.50 x 0.50	422.4 x 266.7 x 12.7
Series 59	16001F*	16.63 x 10.50 x 0.50	422.4 x 266.7 x 12.7
Mini			
Micro-Mini	900F	11.38 x 11.38 x 0.50	289.1 x 289.1 x 12.7
Super-Mini▼	650F	8.38 x 8.38 x 0.50	212.9 x 212.9 x 12.7
Profile			
DP17	7007F	7.00 x 6.25 x 0.38	177.8 x 158.8 x 9.7
DP21	650F	8.38 x 8.38 x 0.50	212.9 x 212.9 x 12.7
DP33	11001F	11.00 x 8.00 x 0.50	279.4 x 203.2 x 12.7
DP38 480 Volt	11001F	11.00 x 8.00 x 0.50	279.4 x 203.2 x 12.7
DP43	8001F	8.00 x 16.00 x 0.38	203.2 x 406.4 x 9.7
DP47	8001F	8.00 x 16.00 x 0.38	203.2 x 406.4 x 9.7
DP52 480 Volt	8001F	8.00 x 16.00 x 0.38	203.2 x 406.4 x 9.7

Continued on next page

* T-Shape
** Nominal; actual size may vary slightly.
▼ Discontinued

FILTERS (con't)

REPLACEMENT FILTERS: All KOOLTRONIC filters consist of a multi-layer grid of sturdy corrugated aluminum, securely held in a one-piece aluminum frame. Filters are required wherever air is drawn into an electronics enclosure or related cooling equipment to keep internal parts as clean as possible. A non-drying adhesive coating traps a high percentage of particulate matter. These filters are reuseable, they may be washed and recoated with the appropriate filter recoating adhesive. Replacements are available for those which become damaged or otherwise non-serviceable.

Model	Filter P/N	Dimensions, inches*** (H x W x D)	Dimensions, mm***
Rack-Mounted			
RML	8752F	16.59 x 8.34 x 0.38	421.4 x 211.8 x 9.7
H9	1175F	16.63 x 9.63 x 0.50	422.4 x 244.6 x 12.7
H10	1175F	16.63 x 9.63 x 0.50	422.4 x 244.6 x 12.7
SlimKool			
SP28	9501F	9.50 x 10.50 x 0.38	241.3 x 266.7 x 9.7
SP28 480 Volt	9501F	9.50 x 10.50 x 0.38	241.3 x 266.7 x 9.7
SP36	9502F	9.50 x 18.50 x 0.50	241.3 x 469.9 x 12.7
SP36 480 Volt	9502F	9.50 x 18.50 x 0.50	241.3 x 469.9 x 12.7
SP43	9503F	9.50 x 25.50 x 0.50	241.3 x 647.7 x 12.7
SP43 480 Volt	9503F	9.50 x 25.50 x 0.50	241.3 x 647.7 x 12.7
Top-Mounted			
Super-Mini (HSL)	11001F	11.00 x 8.00 x 0.50	279.4 x 203.2 x 12.7
Compact	240F	12.38 x 7.38 x 0.50	314.5 x 187.5 x 12.7
Compact Plus	4811F	4.81 x 15.00 x 0.38	122.2 x 381.0 x 9.7
Full Size	17001F	16.00 x 13.00 x 0.50	406.4 x 330.2 x 12.7
Advantage	10871F	16.63 x 10.13 x 0.50	422.4 x 257.3 x 12.7
TrimLine			
NP17	10871F	10.88 x 14.88 x 0.50	276.4 x 378.0 x 12.7
Narrow-Mini	8751F	16.63 x 8.38 x 0.50	422.4 x 212.9 x 12.7
NP28	8751F	16.63 x 8.38 x 0.50	422.4 x 212.9 x 12.7
NP33	12251F	16.63 x 11.88 x 0.50	422.4 x 301.8 x 12.7
NPT33	7131F	7.50 x 11.50 x 0.38	190.5 x 292.1 x 9.7
NP36	1000F	12.38 x 12.38 x 0.50	314.5 x 314.5 x 12.7
NP47	12251F	16.63 x 11.88 x 0.50	422.4 x 301.8 x 12.7
NPT47 - (Qty. 2)	681F	6.81 x 6.81 x 0.38	173.0 x 173.0 x 9.7
NPT52	9001F	9.00 x 10.25 x 0.38	228.6 x 260.3 x 9.7
NP59▼	20001F	19.63 x 15.63 x 1.00	498.6 x 397.0 x 25.4

ACCESSORIES & OPTIONS

* T-Shape
** Nominal; actual size may vary slightly.
▼ Discontinued



HEAT EXCHANGERS

The KOOLTRONIC standard line of heat exchangers is one of the most versatile available. It satisfies a large range of application requirements by utilizing various heat transfer technologies. Heat exchangers provide many of the advantages of air conditioners, and are generally less costly to install and operate.

KOOLTRONIC high performance Heat Exchangers combine powerful forced convection cooling with the advantages of a closed-loop cooling system, for environments that pose contaminant problems. The closed-loop design cools and recirculates the same clean air, isolating components from the hostile environment.

Air-to-Air Heat Exchangers are the ideal choice for applications that can tolerate operating temperatures somewhat higher than ambient. The ***KTHE Series*** features a refrigerant-charged fin-and-tube coil, employing the heat pipe principle. The ***KXRP, KXHE, KXNP and KNHX Series*** utilize a high-efficiency convoluted aluminum heat transfer element. These elements provide excellent thermal transfer performance and are easily removed for cleaning.

KOOLTRONIC manufactures its own heat exchanger elements. All KOOLTRONIC Heat Exchangers provide a large heat transfer area in a compact package with high performance air systems for high flow rates and thorough air distribution within the electronics or electrical enclosure.

KPHE and KNHE Water-to-Air Heat Exchangers fill the performance gap between ***Air-to-Air Heat Exchangers*** and ***Air Conditioners***. Where a reliable, clean, cool water supply is available, they are often the ideal solution when extreme contaminant or temperature conditions are present.

The adaptability of KOOLTRONIC Heat Exchangers is increased by flexible mounting configurations (external, internal, vertical, horizontal) and a comprehensive line of accessories and options.

Most KOOLTRONIC Heat Exchangers are designed for installation in normal indoor atmospheres. For operation outdoors, weather protection and special protective features are required. The use of standard indoor units outdoors would invite damage and early component failure, and will invalidate the KOOLTRONIC warranty. ***Advantage KXRP Series*** *or* ***Integrity NEMA 4/4X Heat Exchangers*** *are available for outdoor installation or applications requiring washdown.*

Each KOOLTRONIC Heat Exchanger is engineered for performance and built for reliability. Most standard ***Heat Exchangers*** are UL/CUL ***Listed*** and maintain the NEMA Enclosure Rating referred to in the individual Series sections.

Popular heat exchangers are stocked and ready to ship. Emergency shipment service is available.

KOOLTRONIC also designs and manufactures a variety of heat exchangers to meet unique specifications. We invite your inquiries about our modification and custom-design capabilities.

GENERAL SPECIFICATIONS FOR ALL STANDARD HEAT EXCHANGERS

PRECISION BALL-BEARING MOTORS: All blower motors are UL/CSA Recognized and include automatic-reset thermal overload protection and double-sealed or double-shielded precision ball bearings. Special permanent lubricants perform over a broad temperature range: -20ºF (-29ºC) to 250ºF (121ºC). Consult KOOLTRONIC for motors designed to meet military or other extreme environmental specifications.

Tube axial fans are rated to perform at 14ºF (-10ºC) to 158ºF (70ºC) and are designed to meet UL, CSA, and VDE.

RUGGED CONSTRUCTION: Precision-engineered heavy gauge steel construction insures that Heat Exchangers will stand up under tough applications.

FILTERS: Multi-layer grid of sturdy, corrugated aluminum in an aluminum frame. May be reused after washing off accumulations and spraying with KOOLTRONIC A-16 Recoating Adhesive. Filters must be kept free of accumulations to prevent reduction or loss of performance and/or damage to equipment. Filters are not required on water-cooled models (***KPHE Series***).

BAKED POWDER FINISH: Durable, baked-on powder finish is standard. Other finishes are available.

POWER: 115 VAC or 230 VAC, 50/60 Hz is standard. For multiphase power, other voltages and frequencies or Brushless DC applications for other than the TrimLine Series, consult KOOLTRONIC.

POWER CORD: All 115 and 230 VAC models are supplied with six-foot three-wire cord with plug. Brushless DC units have three-wire cords without plugs for direct wiring to power source. Special lengths and/or plugs are available.

TRIMLINE SERIES AIR-TO-AIR PANEL-MOUNTED HEAT EXCHANGERS



DESCRIPTION

The slender, versatile ***TrimLine KXNP Heat Exchangers*** feature the KOOLTRONIC exclusive convoluted, embossed aluminum heat transfer elements. These state-of-the art elements and specially-sized KOOLTRONIC double-inlet blowers provide excellent near-ambient cooling performance in a closed-loop system.

These features provide the ultimate in cooling flexibility when designing enclosures for applications that can have varying heat loads.

Where internal temperatures must be kept below ambient, one of the ***KPHE Series Water-to-Air Heat Exchangers*** or either ***Air-Cooled*** or ***Water Cooled Air Conditioners*** should be considered.

Outdoor operations require weather protection and external protective features. See ***Advantage Indoor/Outdoor Series*** and ***Integrity NEMA 4/4X Series.***

General specifications common to all KOOLTRONIC Heat Exchangers are on the first page of this section.

KOOLTRONIC also designs and manufactures a variety of heat exchangers to meet *unique* specifications. We invite your inquiries about our modification and custom-design capabilities.

CALL 1-800-321-KOOL (5665)
or FAX 609-466-1114

c UL us

NEMA
TYPE 12
MAINTAINED

TRIMLINE

STANDARD FEATURES

- All Models UL/CUL Listed
- Closed-Loop Near-Ambient Cooling
- Epoxy-Coated Element
- Filter
- NEMA 12 Rating Maintained (UL50)
- Powerful Centrifugal Blowers and Convoluted Aluminum Element
- Removable Element Access Panel
- Rugged Heavy-duty Steel Construction with Baked Powder Finish
- Six foot 3-wire power cord with plug
- Units mount interghangeably with the TrimLine NP Series

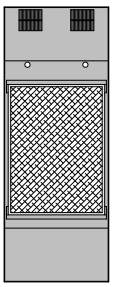

KXNP33
33 Watts/ºF
33"H x 12"W x 10"D

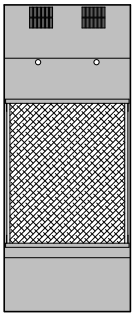

KXNP36
42 Watts/ºF
36"H x 15"W x 10"D

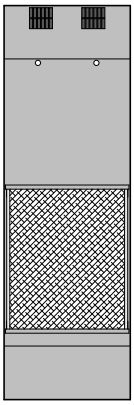

KXNP47
56 Watts/ºF
47"H x 15"W x 10"D

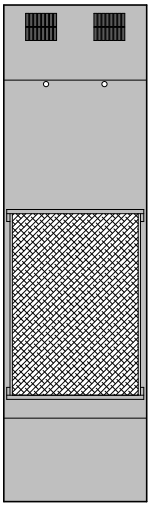

KXNP59
91 Watts/ºF
59"H x 17"W x 14"D

KXNP33 & KXNP36 TRIMLINE AIR-TO-AIR PANEL-MOUNTED HEAT EXCHANGERS

TECHNICAL DATA*

Model	Volts	Power Amps	Power Watts	Maximum Temperature ºF Enclosure	Maximum Temperature ºF Ambient	Performance Watts/ºF (Air In)	Approx. Weight lbs	Approx. Weight kg
KXNP33	115	2.60	227	160	-20 to 131	33	56	25
K2XNP33	230	1.90	227	160	-20 to 131	33	56	25
K7XNP33	24VDC	10.0	240	160	131	33	56	25
K8XNP33	48VDC	5.8	270	160	131	33	56	25
KXNP36	115	3.2	363	160	-20 to 131	42	67	30
K2XNP36	230	1.6	363	160	-20 to 131	42	67	30
K7XNP36	24VDC	12.3	296	160	131	42	67	30
K8XNP36	48VDC	1.60	370	160	131	42	67	30



NEMA TYPE 12 MAINTAINED

STANDARD FEATURES

- Closed-Loop Near-Ambient Cooling
- Convoluted Aluminum Element
- Epoxy-Coated Element
- Filter
- Heavy-duty Steel Shell
- NEMA 12 Rating Maintained (UL50)
- Removable Element Access Panel
- UL/CUL Listed

ACCESSORIES AND OPTIONS

	Page
Filter Recoating Adhesive	118
Lifting Eyes	118
Low Airflow Detector	119
Other voltages and frequencies	✦
Replacement Filters	119
Special materials or finishes	✦
Special motors, line cords or connectors	✦
Stainless or Aluminum Shell	118
Temperature Alarm	118
Weather Protection Kit	118

PERFORMANCE CHARTS*

KXNP33

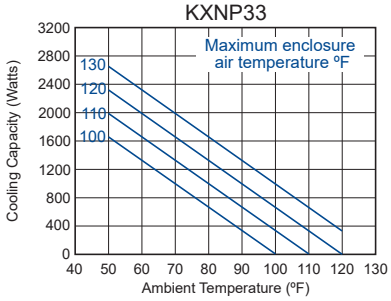

KXNP36

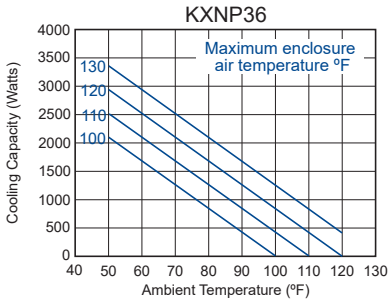

DIMENSIONS

	KXNP33		KXNP36	
A	32.88	[835.2]	36.75	[933.5]
B	12.50	[317.5]	15.13	[384.3]
C	9.75	[247.7]	9.75	[247.7]
D	12.19	[309.6]	14.81	[376.2]
E	0.38	[9.7]	0.75	[19.1]
F	2.75	[69.9]	3.00	[76.2]
G	9.13	[231.9]	12.50	[317.5]
H	19.63	[498.6]	19.38	[492.3]
J	9.00	[228.6]	12.00	[304.8]
K	10.50	[266.7]	12.00	[304.8]
L	11.19	[284.2]	13.31	[338.1]
M	7.38	[187.5]	8.25	[209.6]
N	8.00	[203.2]	6.75	[171.5]
P	8		10	

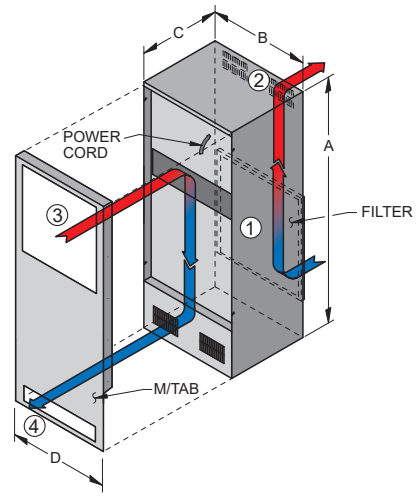

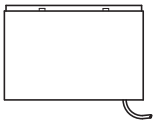

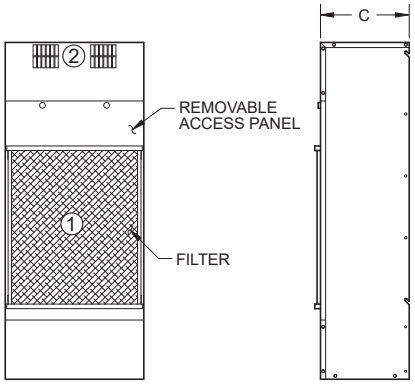

MOUNTING PLAN

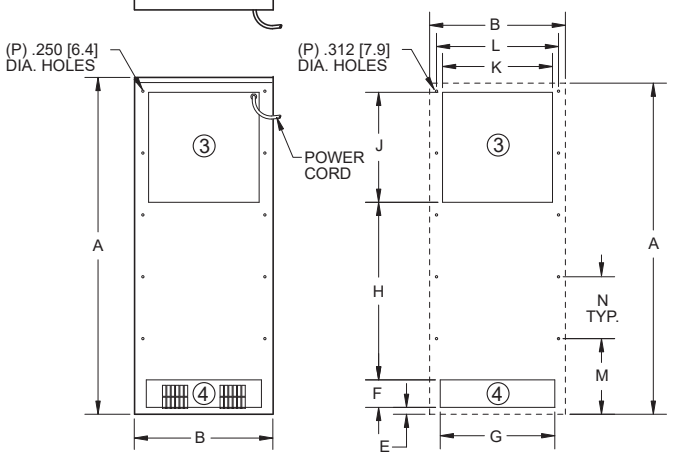

① FILTERED CONDENSER AIR INLET (Ambient Air In)

② CONDENSER OUTLET (Warm Ambient Air Out)

③ WARM AIR RETURN FROM ENCLOSURE

④ COOL AIR OUTLET TO ENCLOSURE

Dimensions, inches [mm], are for reference only and subject to change.

* 60 Hz. operation. For 50 Hz. operation, consult Kooltronic.

TRIMLINE

KXNP47 & KXNP59 TRIMLINE AIR-TO-AIR PANEL-MOUNTED HEAT EXCHANGERS



NEMA TYPE 12 MAINTAINED

TECHNICAL DATA*

Model	Volts	Power Amps	Power Watts	Maximum Temperature °F Enclosure	Maximum Temperature °F Ambient	Performance Watts/°F (Air In)	Approx. Weight lbs	Approx. Weight kg
KXNP47	115	3.40	354	160	-20 to 131	56	79	36
K2XNP47	230	1.70	354	160	-20 to 125	56	79	36
K7XNP47	24VDC	12.3	296	160	131	56	79	36
K8XNP47	48VDC	7.9	370	160	131	56	79	36
KXNP59	115	7.20	665	160	-20 to 131	91	130	59
K2XNP59	230	3.25	665	160	-20 to 131	91	130	59

STANDARD FEATURES

- Closed-Loop Near-Ambient Cooling
- Convoluted Aluminum Element
- Epoxy-Coated Element
- Filter
- Heavy-duty Steel Shell
- NEMA 12 Rating Maintained (UL50)
- Removable Element Access Panel
- UL/CUL Listed

ACCESSORIES AND OPTIONS

	Page
Filter Recoating Adhesive	118
Lifting Eyes	118
Low Airflow Detector	118
Other voltages and frequencies	✦
Replacement Filters	119
Special materials or finishes	✦
Special motors, line cords or connectors	✦
Stainless or Aluminum Shell	118
Temperature Alarm	118
Weather Protection Kit	118

PERFORMANCE CHARTS*

KXNP47

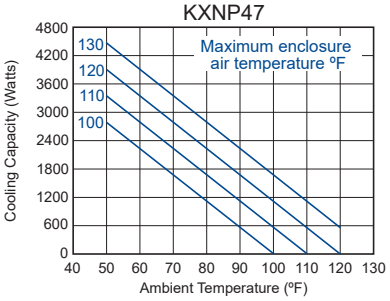

KXNP59

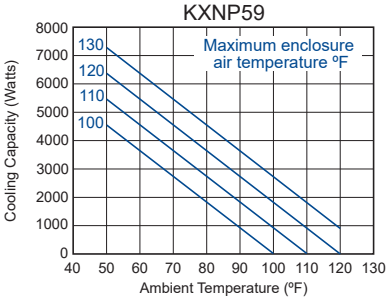

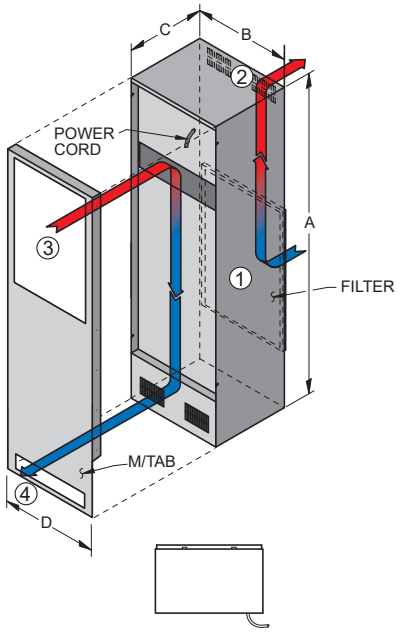

DIMENSIONS

	KXNP47		KXNP59	
A	47.25	[1200.2]	59.56	[1512.8]
B	15.13	[384.3]	17.13	[435.1]
C	9.75	[247.7]	13.75	[349.3]
D	14.81	[376.2]	16.75	[425.5]
E	0.75	[19.1]	7.50	[191.0]
F	3.00	[76.2]	2.94	[74.7]
G	12.50	[317.5]	15.25	[387.4]
H	23.88	[606.6]	27.88	[708.2]
J	18.00	[457.2]	20.00	[508.0]
K	12.00	[304.8]	14.00	[355.6]
L	13.31	[338.1]	14.69	[373.1]
M	10.13	[257.3]	11.00	[279.4]
N	7.00	[177.8]	6.69	[169.9]
P	12		16	

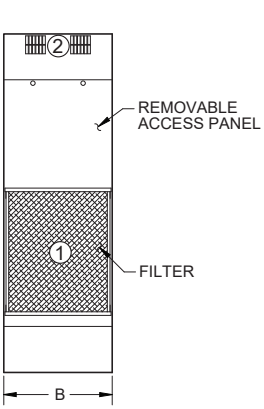

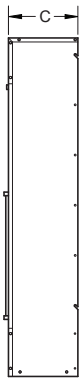

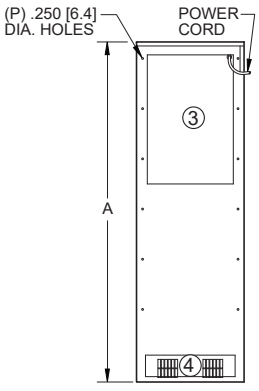

MOUNTING PLAN

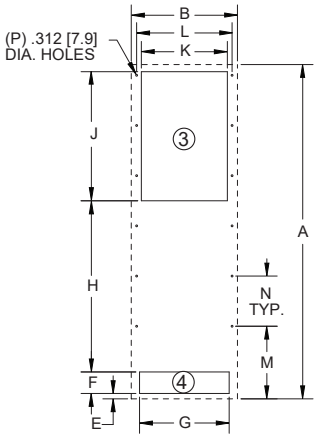

① FILTERED CONDENSER AIR INLET (Ambient Air In)

② CONDENSER OUTLET (Warm Ambient Air Out)

③ WARM AIR RETURN FROM ENCLOSURE

④ COOL AIR OUTLET TO ENCLOSURE

Dimensions, inches [mm], are for reference only and subject to change.

* 60 Hz. operation. For 50 Hz. operation, consult Kooltronic.

✦ Contact KOOLTRONIC for information.

TRIMLINE

INTEGRITY NEMA 4/4X AIR-TO-AIR PANEL-MOUNTED HEAT EXCHANGERS

DESCRIPTION

KOOLTRONIC ***Integrity NEMA 4/4X Heat Exchangers*** are intended to complement the Integerty ***NEMA 4/4X Air Conditioner*** product line for those applications that require the protection of closed-loop cooling, but can tolerate operating temperatures somewhat above the ambient.

Tested and rated by Underwriters Laboratories, these uniquely designed (Patented) stainless steel heat exchangers provide a clean, cool internal environment and also protect against the hazards specified for both **Indoor** and **Outdoor NEMA 4** and **4X Enclosures.**

These units can be mounted interchangeably with KOOLTRONIC ***Integrity NEMA 4/4X Air Conditioners*** for maximum flexibility in selection, upgrading or reducing cooling performance, if requirements change. The outer cover mounting holes as well as the cool air discharge and heated air return cutouts are identical (except cool air discharge of the 32" model), so that either type of cooling unit could be used.

More powerful ambient-side blowers are used than in comparably sized standard ***KXHE*** and ***KXNP*** models, to overcome the added static pressure caused by the special baffles and dampers required to comply with NEMA 4/4X sealing and performance standards.

For extreme ambient temperatures and/or severely contaminated environments, the use of ***Water-to-Air Heat Exchangers*** or either ***Air-Cooled*** or ***Water-Cooled Air Conditioners*** is recommended.

General specifications common to all KOOLTRONIC Heat Exchangers are on the first page of this section.

KOOLTRONIC also designs and manufactures a variety of heat exchangers to meet *unique* specifications. We invite your inquiries about our modification and custom-design capabilities.

CALL 1-800-321-KOOL (5665)
or FAX 609-466-1114



c UL us NEMA TYPE 4/4X MAINTAINED

STANDARD FEATURES

- Epoxy-Coated Aluminum Element
- Filter
- Gasketed flanges on all four mounting edges for positive leakproof seal
- NEMA 4/4X Rating Maintained (UL50)
- Powerful Centrifugal Blowers and Convoluted Aluminum Element
- Six foot 3-wire power cord with plug
- Stainless Steel Shell
- UL Listed

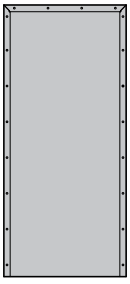

KNHX32
21 Watts/ºF
32"H x 14"W x 13"D

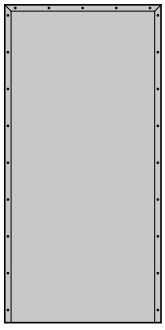

KNHX38
44 Watts/ºF
38"H x 18"W x 18"D

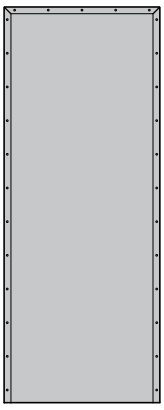

KNHX47
54 Watts/ºF
47"H x 18"W x 18"D

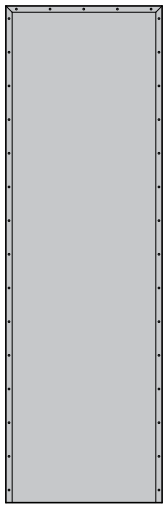

KNHX59
65 Watts/ºF
59"H x 18"W x 18"D

KNHX32 AIR-TO-AIR
PANEL-MOUNTED HEAT EXCHANGERS



NEMA TYPE 4/4X MAINTAINED

TECHNICAL DATA*

Model	Volts	Power Amps	Power Watts	Maximum Temperature ºF Enclosure	Maximum Temperature ºF Ambient	Performance Watts/ºF (Air In)	Approx. Weight lbs	Approx. Weight kg
KNHX32	115	1.50	160	160	-20 to 131	21	70	32
K2NHX32	230	1.10	260	160	-20 to 131	21	70	32

STANDARD FEATURES

- Closed-Loop Near-Ambient Cooling
- Epoxy-Coated Aluminum Element
- Filter
- Gasketed Flanges
- NEMA 4/4X Rating Maintained (UL50)
- Stainless Steel Shell
- UL/CUL Listed

ACCESSORIES AND OPTIONS

	Page
■ Filter Recoating Adhesive	118
■ Lifting Eyes	118
■ Low Airflow Detector	118
■ Other voltages and frequencies	✦
■ Replacement Filters	119
■ Special materials or finishes	✦
■ Special motors, line cords, or connectors	✦
■ Temperature Alarm	118

PERFORMANCE CHART*

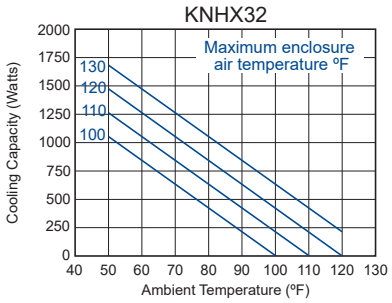

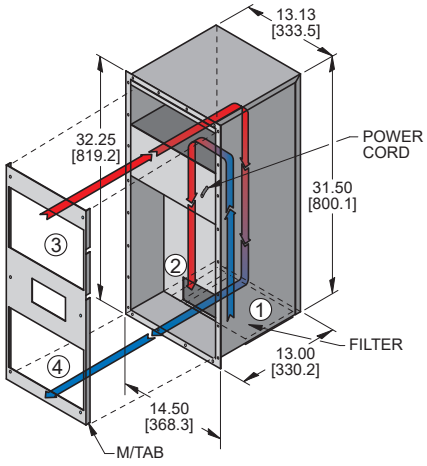

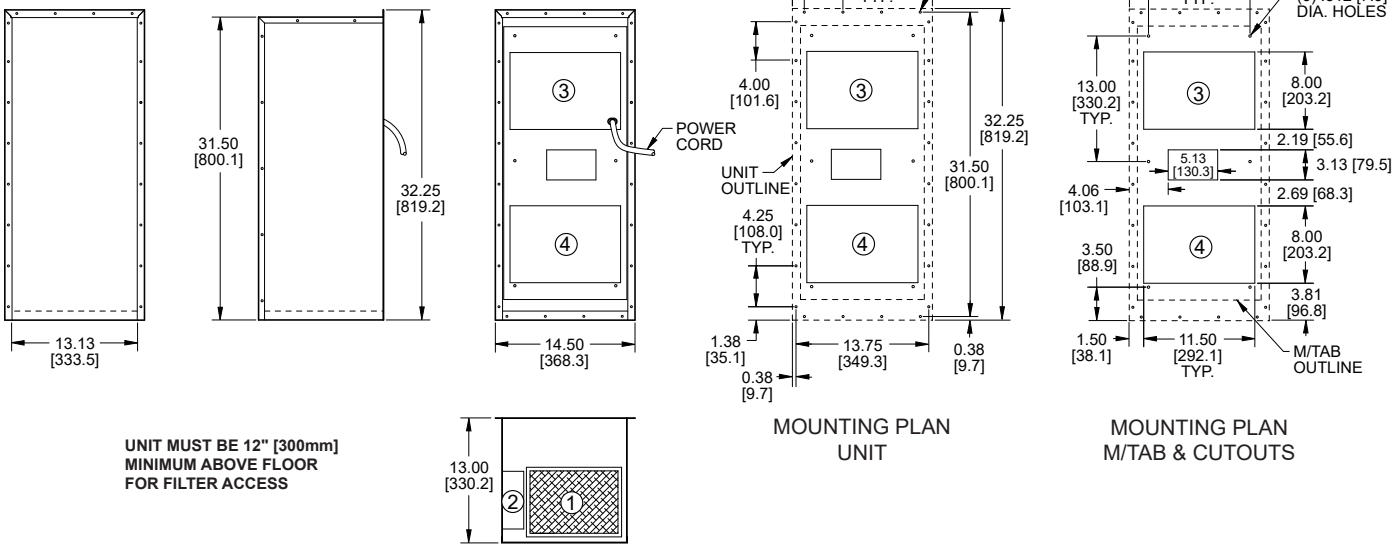

UNIT MUST BE 12" [300mm] MINIMUM ABOVE FLOOR FOR FILTER ACCESS

MOUNTING PLAN UNIT

MOUNTING PLAN M/TAB & CUTOUTS

Dimensions, inches [mm], are for reference only and subject to change.

* 60 Hz. operation. For 50 Hz. operation, consult Kooltronic.

✦ Contact KOOLTRONIC for information.

KNHX38 & KNHX47 AIR-TO-AIR PANEL-MOUNTED HEAT EXCHANGERS

TECHNICAL DATA*

Model	Volts	Power Amps	Power Watts	Maximum Temperature ºF Enclosure	Maximum Temperature ºF Ambient	Performance Watts/ºF (Air In)	Approx. Weight lbs	Approx. Weight kg
KNHX38	115	3.0	340	160	-20 to 131	44	115	52
K2NHX38	230	2.1	440	160	-20 to 131	46	115	52
KNHX47	115	3.0	340	160	-20 to 131	54	135	61
K2NHX47	230	2.1	440	160	-20 to 131	56	135	61



NEMA TYPE 4/4X MAINTAINED

STANDARD FEATURES

- Closed-Loop Near-Ambient Cooling
- Epoxy-Coated Aluminum Element
- Filter
- Gasketed Flanges
- NEMA 4/4X Rating Maintained (UL50)
- Stainless Steel Shell
- UL/CUL Listed

ACCESSORIES AND OPTIONS

	Page
Filter Recoating Adhesive	118
Lifting Eyes	118
Low Airflow Detector	118
Other voltages and frequencies	✦
Replacement Filters	119
Special materials or finishes	✦
Special motors, line cords, or connectors	✦
Temperature Alarm	118

PERFORMANCE CHARTS*

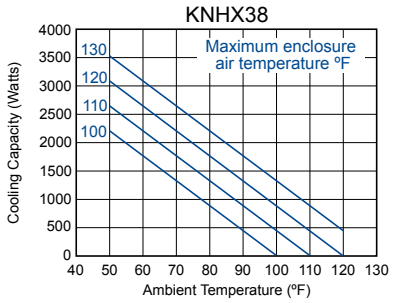

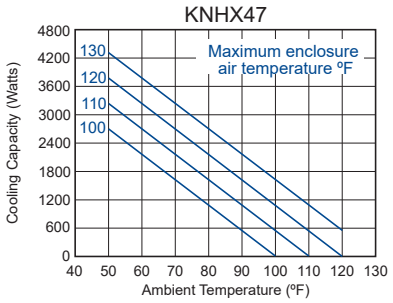

DIMENSIONS

	KNHX38	KNHX47
A	37.75 [958.9]	47.00 [1193.8]
B	37.00 [939.8]	46.25 [1174.8]
C	36.69 [931.9]	45.94 [1166.9]
D	12.75 [323.9]	12.25 [311.2]
E	12.75 [323.9]	11.25 [285.8]
F	18.13 [460.5]	27.38 [695.5]
G	2.50 [63.5]	2.50 [63.5]
H	4.34 [110.2]	4.00 [101.6]
J	6	8
K	27	33

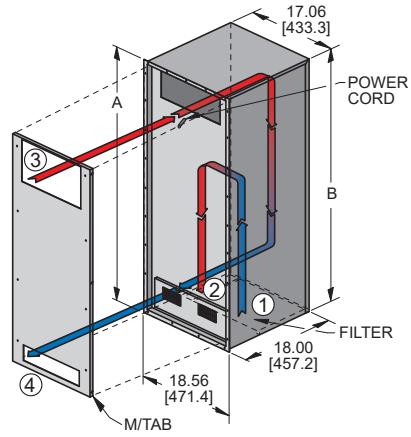

① FILTERED CONDENSER AIR INLET (Ambient Air In)

② CONDENSER OUTLET (Warm Ambient Air Out)

③ WARM AIR RETURN FROM ENCLOSURE

④ COOL AIR OUTLET TO ENCLOSURE

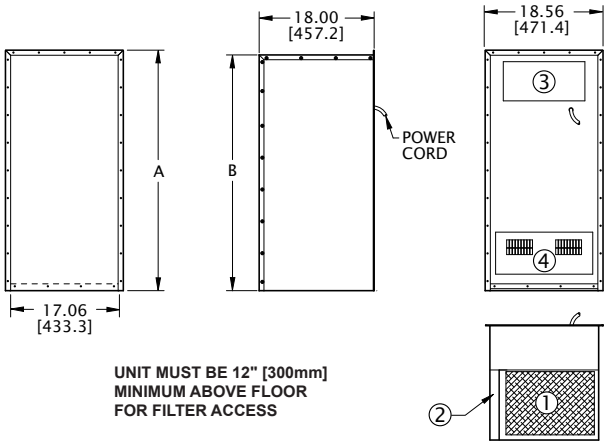

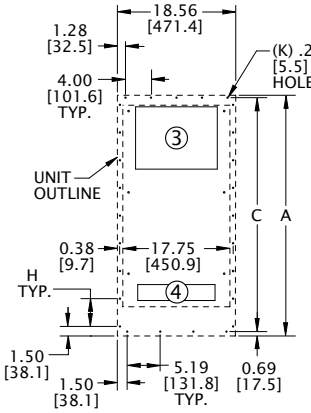

MOUNTING PLAN UNIT

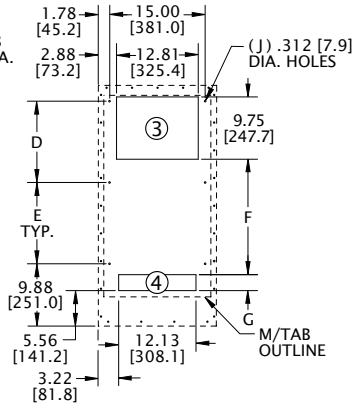

MOUNTING PLAN M/TAB & CUTOUTS

Dimensions, inches [mm], are for reference only and subject to change.

* 60 Hz. operation. For 50 Hz. operation, consult Kooltronic.

✦ Contact KOOLTRONIC for information.

KNHX59 AIR-TO-AIR
PANEL-MOUNTED HEAT EXCHANGERS

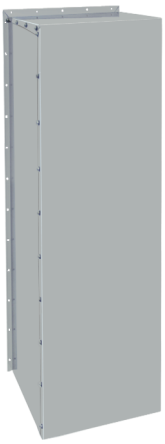

NEMA
TYPE 4/4X
MAINTAINED

TECHNICAL DATA*

Model	Volts	Power Amps	Power Watts	Maximum Temperature ºF Enclosure	Maximum Temperature ºF Ambient	Performance Watts/ºF (Air In)	Approx. Weight lbs	Approx. Weight kg
KNHX59	115	4.50	400	160	-20 to 131	65	170	77
K2NHX59	230	3.30	660	160	-20 to 131	65	170	77

STANDARD FEATURES

- Closed-Loop Near-Ambient Cooling
- Epoxy-Coated Aluminum Element
- Filter
- Gasketed Flanges
- NEMA 4/4X Rating Maintained (UL50)
- Stainless Steel Shell
- UL/CUL Listed

ACCESSORIES AND OPTIONS

	Page
Filter Recoating Adhesive	118
Lifting Eyes	118
Low Airflow Detector	118
Other voltages and frequencies	✦
Replacement Filters	119
Special materials or finishes	✦
Special motors, line cords, or connectors	✦
Temperature Alarm	118

PERFORMANCE CHART*

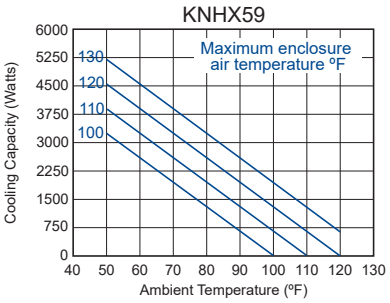

① FILTERED CONDENSER AIR INLET (Ambient Air In)
② CONDENSER OUTLET (Warm Ambient Air Out)
③ WARM AIR RETURN FROM ENCLOSURE
④ COOL AIR OUTLET TO ENCLOSURE

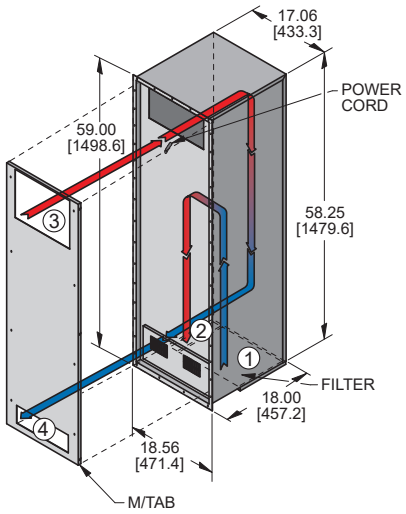

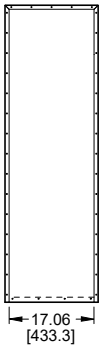

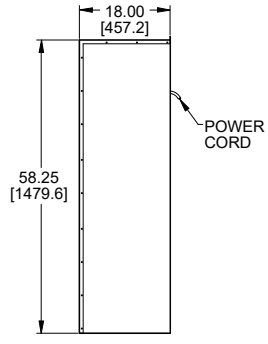

UNIT MUST BE 12" [300mm] MINIMUM ABOVE FLOOR FOR FILTER ACCESS

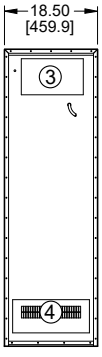

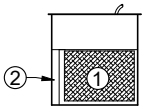

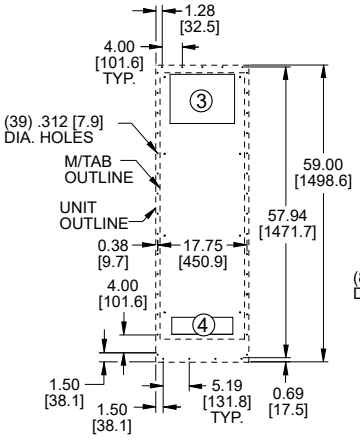

MOUNTING PLAN
UNIT

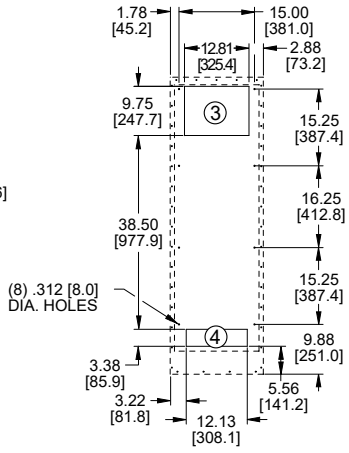

MOUNTING PLAN
M/TAB & CUTOUTS

Dimensions, inches [mm], are for reference only and subject to change.

* 60 Hz. operation. For 50 Hz. operation, consult Kooltronic.

✦ Contact KOOLTRONIC for information.

KXHE SERIES AIR-TO-AIR PANEL-MOUNTED HEAT EXCHANGERS

DESCRIPTION

The ***KXHE Series Air-to-Air Heat Exchangers*** incorporates the use of a state of the art, high-efficiency convoluted aluminum heat transfer element with powerful air movers. This combination uses counterflowing airstreams, for maximum heat transfer efficiency, in a closed-loop system, to provide cooling within sealed electronics or industrial enclosures. This makes the ***KXHE*** an ideal choice for applications in dirty or oil-laden environments. KOOLTRONIC manufactures its own ***KXHE*** heat transfer elements.

These unique heat exchangers operate effectively when mounted vertically or horizontally, internally or externally, and are available in numerous sizes, capacities and configurations.

KXHE Air-to-Air Heat Exchangers are an excellent choice for all applications requiring a closed-loop system which can tolerate cabinet temperatures slightly above ambient.

Where internal temperatures must be kept below ambient, one of the ***KPHE Series Water-to-Air Heat Exchangers*** or either ***Air-Cooled*** or ***Water-Cooled Air Conditioners*** should be considered.

Outdoor operations require weather protection and external protective features. Also see ***Advantage Series*** and ***Integrity NEMA 4/4X Series.***

General specifications common to all KOOLTRONIC Heat Exchangers are on the first page of this section.

KOOLTRONIC also designs and manufactures a variety of heat exchangers to meet *unique* specifications. We invite your inquiries about our modification and custom-design capabilities.

CALL 1-800-321-KOOL (5665)
or FAX 609-466-1114



c UL us

NEMA
TYPE 12
MAINTAINED

KXHE SERIES

STANDARD FEATURES

- All Models UL/CUL Listed
- Closed-Loop Cooling
- Convoluted Aluminum Element
- Epoxy-Coated Element
- Filter
- Heavy-duty Steel Shell with Baked Powder Finish
- NEMA 12 Rating maintained (UL50)
- Six foot (minimum) 3-wire power cord with plug

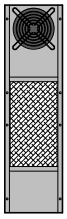

KXHE60A
8 Watts/ºF
22"H x 6"W x 4"D

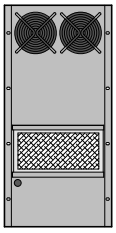

KXHE120A
16 Watts/ºF
24"H x 11"W x 4"D

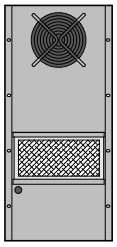

KXHE122A
19 Watts/ºF
25"H x 11"W x 8"D

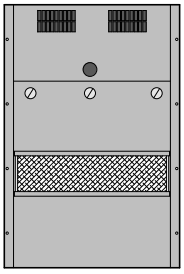

KXHE125A
57 Watts/ºF
28"H x 19"W x 8"D

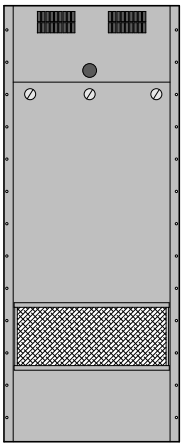

KXHE245A
74 Watts/ºF
47"H x 19"W x 8"D

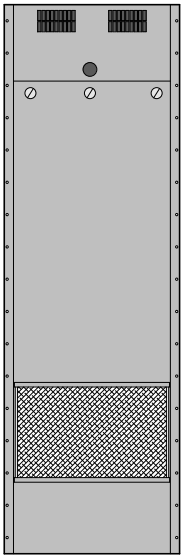

KXHE365A
88 Watts/ºF
59"H x 19"W x 8"D

KXHE60A AIR-TO-AIR
PANEL-MOUNTED HEAT EXCHANGERS



NEMA TYPE 12 MAINTAINED

TECHNICAL DATA*

Model	Volts	Power Amps	Power Watts	Maximum Temperature °F Enclosure	Maximum Temperature °F Ambient	Performance Watts/°F (Air In)	Approx. Weight lbs	Approx. Weight kg
KXHE60A	115	0.4	38	160	-20 to 115	8	11	5
K2XHE60A	230	0.2	38	160	-20 to 115	8	11	5

STANDARD FEATURES

- Closed-Loop Cooling
- Epoxy-Coated Element
- Filter
- Heavy-duty Steel Shell
- NEMA 12 Rating Maintained (UL50)
- Refrigerant-Free Aluminum Element
- UL/CUL Listed

ACCESSORIES AND OPTIONS

	Page
Filter Recoating Adhesive	118
Mounting Hinge	118
Other voltages and frequencies	✦
Replacement Filters	119
Special materials or finishes	✦
Special motors, line cords, or connectors	✦
Temperature Alarm	118
Weather Protection Kit	118

PERFORMANCE CHART*

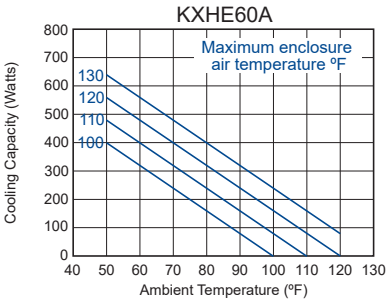

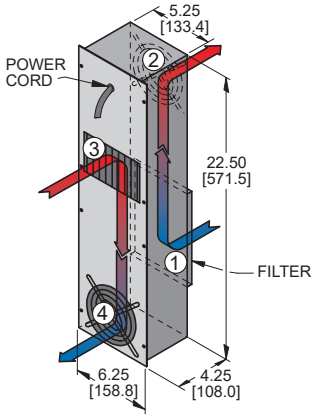

① FILTERED CONDENSER AIR INLET (Ambient Air In)
② CONDENSER OUTLET (Warm Ambient Air Out)
③ WARM AIR RETURN FROM ENCLOSURE
④ COOL AIR OUTLET TO ENCLOSURE

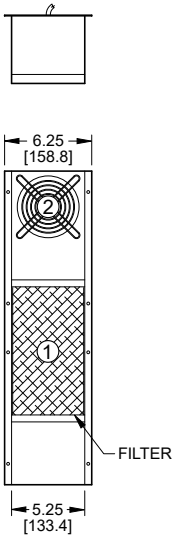

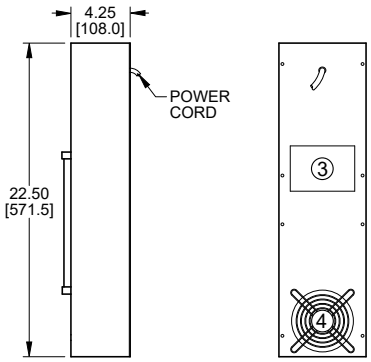

MOUNTING PLAN

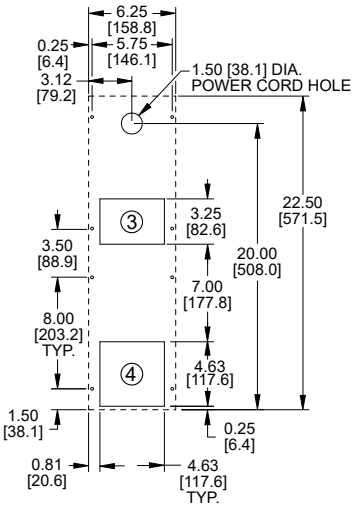

Dimensions, inches [mm], are for reference only and subject to change.

* 60 Hz. operation. For 50 Hz. operation, consult Kooltronic.

✦ Contact KOOLTRONIC for information.

KXHE SERIES

KXHE120A & KXHE122A AIR-TO-AIR PANEL-MOUNTED HEAT EXCHANGERS

TECHNICAL DATA*

Model	Volts	Power Amps	Power Watts	Maximum Temperature ºF Enclosure	Maximum Temperature ºF Ambient	Performance Watts/ºF (Air In)	Approx. Weight lbs	Approx. Weight kg
KXHE120A	115	0.8	75	160	-20 to 115	16	20	9
K2XHE120A	230	0.4	75	160	-20 to 115	16	20	9
KXHE122A	115	1.1	90	160	-20 to 115	19	30	14
K2XHE122A	230	0.5	90	160	-20 to 110	19	30	14



c UL us

NEMA TYPE 12 MAINTAINED

STANDARD FEATURES

- Closed-Loop Cooling
- Epoxy-Coated Element
- Filter
- Heavy-duty Steel Shell
- NEMA 12 Rating Maintained (UL50)
- Refrigerant-Free Aluminum Element
- UL/CUL Listed

ACCESSORIES AND OPTIONS

	Page
■ Filter Recoating Adhesive	118
■ Lifting Eyes	118
■ Low Airflow Detector	118
■ Mounting Hinge	118
■ Other voltages and frequencies	✦
■ Replacement Filters	119
■ Special materials or finishes	✦
■ Special motors, line cords, or connectors	✦
■ Temperature Alarm	118
■ Weather Protection Kit	118

PERFORMANCE CHARTS*

KXHE120A

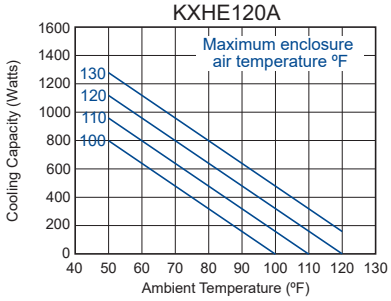

KXHE122A

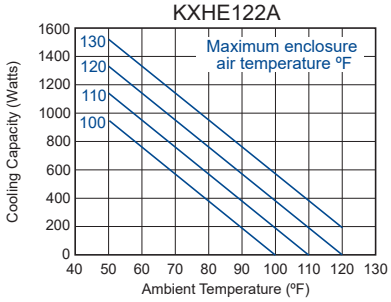

DIMENSIONS

	KXHE120A		KXHE122A	
A	24.00	[609.6]	25.50	[647.7]
B	4.19	[106.4]	8.31	[211.1]
C	19.13	[485.9]	19.88	[505.0]
D	8.88	[225.6]	8.19	[208.0]
E	4.75	[120.7]	6.25	[158.8]
F	3.00	[76.2]	3.75	[95.3]
G	0.63	[16.0]	0.50	[12.7]
H	9.50	[241.3]	7.00	[177.8]

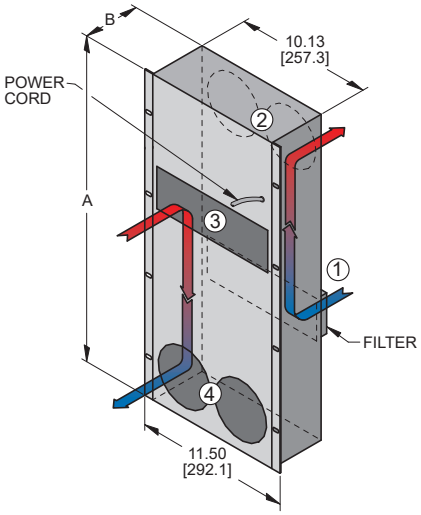

① FILTERED CONDENSER AIR INLET (Ambient Air In)

② CONDENSER OUTLET (Warm Ambient Air Out)

③ WARM AIR RETURN FROM ENCLOSURE

④ COOL AIR OUTLET TO ENCLOSURE

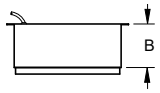

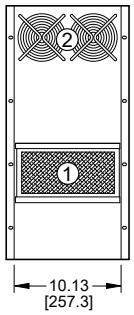

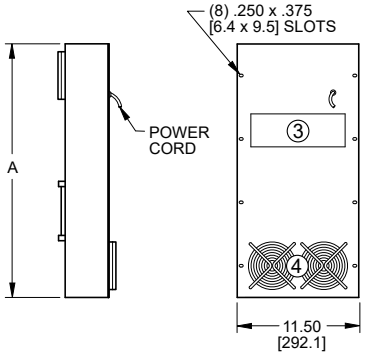

MOUNTING PLAN

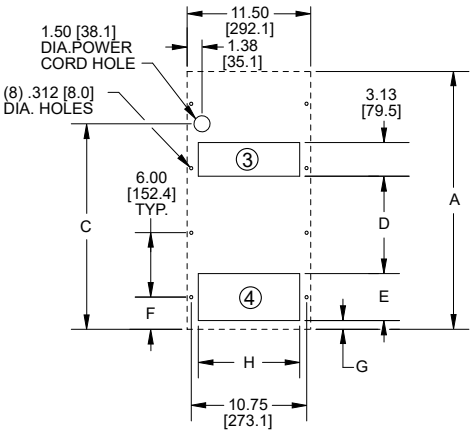

Dimensions, inches [mm], are for reference only and subject to change.

* 60 Hz. operation. For 50 Hz. operation, consult Kooltronic.

✦ Contact KOOLTRONIC for information.

KXHE SERIES

KXHE125A & KXHE245A AIR-TO-AIR PANEL-MOUNTED HEAT EXCHANGERS



NEMA TYPE 12 MAINTAINED

TECHNICAL DATA*

Model	Volts	Power Amps	Power Watts	Maximum Temperature ºF Enclosure	Maximum Temperature ºF Ambient	Performance Watts/ºF (Air In)	Approx. Weight lbs	Approx. Weight kg
KXHE125A	115	3.2	300	160	-20 to 131	57	55	25
K2XHE125A	230	1.6	300	160	-20 to 131	57	55	25
KXHE245A	115	3.6	400	160	-20 to 131	74	80	36
K2XHE245A	230	1.8	400	160	-20 to 131	74	80	36

STANDARD FEATURES

- Closed-Loop Cooling
- Epoxy-Coated Element
- Filter
- Heavy-duty Steel Shell
- NEMA 12 Rating Maintained (UL50)
- Refrigerant-Free Aluminum Element
- UL/CUL Listed

ACCESSORIES AND OPTIONS

	Page
■ Filter Recoating Adhesive	118
■ Lifting Eyes	118
■ Low Airflow Detector	118
■ Mounting Hinge	118
■ Other voltages and frequencies	✦
■ Replacement Filters	119
■ Special materials or finishes	✦
■ Special motors, line cords, or connectors	✦
■ Temperature Alarm	118
■ Weather Protection Kit	118

PERFORMANCE CHARTS*

KXHE125A

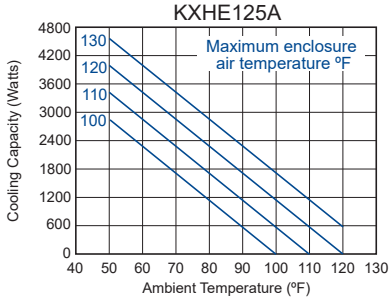

KXHE245A

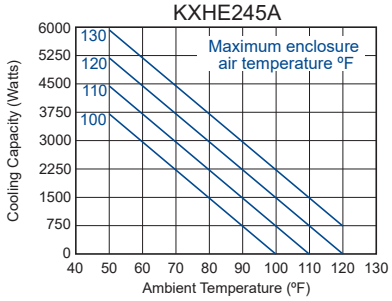

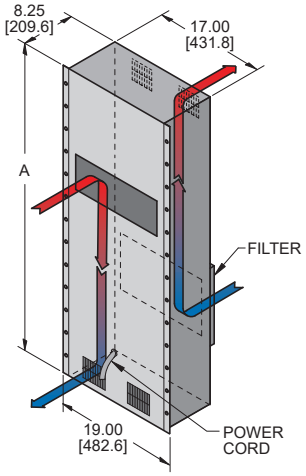

DIMENSIONS

	KXHE125A		KXHE245A	
A	28.50	[723.9]	47.25	[1200.2]
B	7.00	[177.8]	3.50	[88.9]
C	3.75	[95.3]	1.75	[44.5]
D	3.75	[95.3]	8.69	[220.7]
E	13.25	[336.5]	28.44	[722.4]
F	8		26	

① FILTERED CONDENSER AIR INLET (Ambient Air In)

② CONDENSER OUTLET (Warm Ambient Air Out)

③ WARM AIR RETURN FROM ENCLOSURE

④ COOL AIR OUTLET TO ENCLOSURE

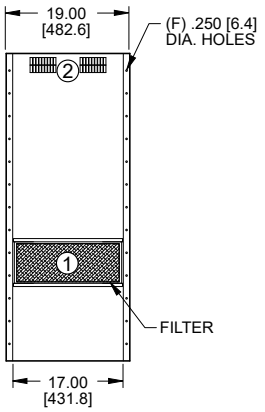

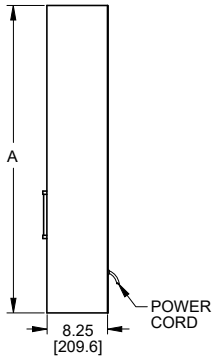

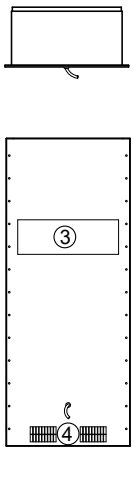

MOUNTING PLAN

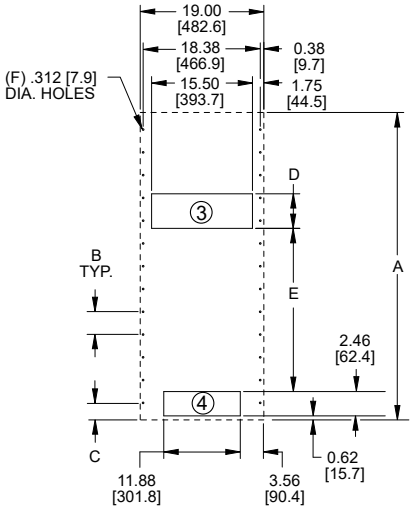

Dimensions, inches [mm], are for reference only and subject to change.

* 60 Hz. operation. For 50 Hz. operation, consult Kooltronic.

✦ Contact KOOLTRONIC for information.

KXHE SERIES

KXHE365A AIR-TO-AIR PANEL-MOUNTED HEAT EXCHANGERS

TECHNICAL DATA*

Model	Volts	Power Amps	Power Watts	Maximum Temperature ºF Enclosure	Maximum Temperature ºF Ambient	Performance Watts/ºF (Air In)	Approx. Weight lbs	Approx. Weight kg
KXHE365A	115	7.2	665	160	-20 to 131	88	105	48
K2XHE365A	230	3.0	665	160	-20 to 131	88	105	48



STANDARD FEATURES

- Closed-Loop Cooling
- Epoxy-Coated Element
- Filter
- Heavy-duty Steel Shell
- NEMA 12 Rating Maintained (UL50)
- Refrigerant-Free Aluminum Element
- UL/CUL Listed

ACCESSORIES AND OPTIONS

	Page
Filter Recoating Adhesive	118
Lifting Eyes	118
Low Airflow Detector	118
Other voltages and frequencies	✦
Replacement Filters	119
Special materials or finishes	✦
Special motors, line cords, or connectors	✦
Temperature Alarm	118
Weather Protection Kit	118

NEMA TYPE 12 MAINTAINED

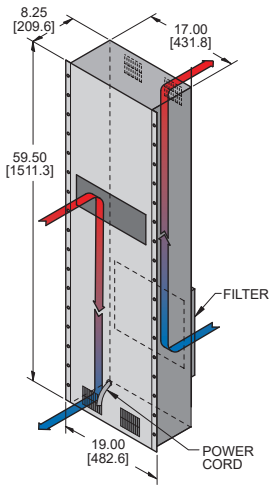

① FILTERED CONDENSER AIR INLET (Ambient Air In)

② CONDENSER OUTLET (Warm Ambient Air Out)

③ WARM AIR RETURN FROM ENCLOSURE

④ COOL AIR OUTLET TO ENCLOSURE

PERFORMANCE CHART*

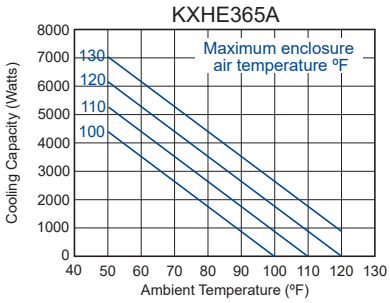

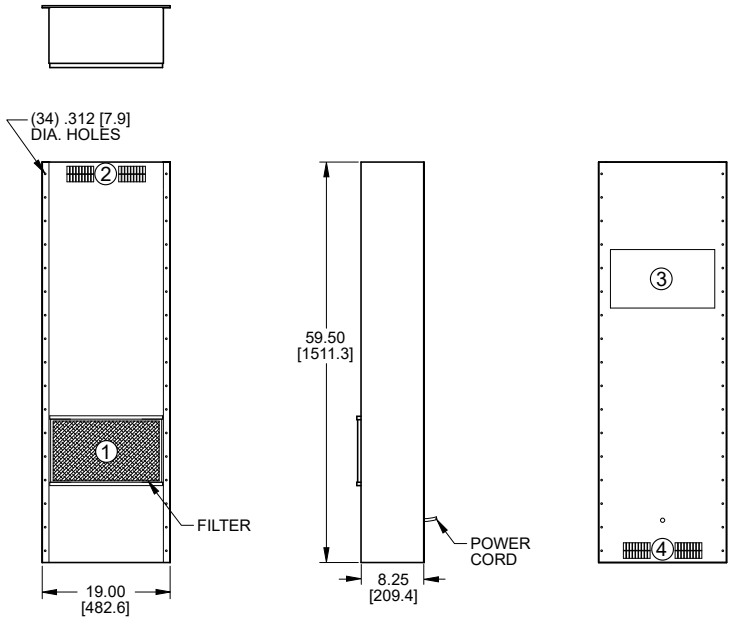

MOUNTING PLAN

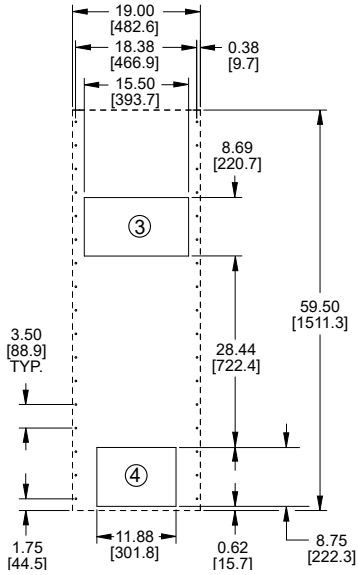

Dimensions, inches [mm], are for reference only and subject to change.

* 60 Hz. operation. For 50 Hz. operation, consult Kooltronic.

✦ Contact KOOLTRONIC for information.

KXHE SERIES

KTHE200 REFRIGERANT-CHARGED AIR-TO-AIR HEAT EXCHANGER



DESCRIPTION

The ***KTHE200 Air-to-Air Heat Exchangers*** utilize a refrigerant-charged coil to provide closed-loop cooling in applications where slightly above ambient temperatures are required. They have powerful air movers to remove substantial heat loads from sealed cabinets while maintaining low temperature differential above ambient. These units operate efficiently in a variety of mounting orientations (vertical, horizontal, external, internal).

KTHE Air-to-Air Heat Exchangers are an excellent choice for applications requiring a closed-loop system with good cooling performance, where convoluted aluminum heat transfer elements may not be appropriate.

Where internal temperatures must be kept below ambient, one of the ***KPHE Series Water-to-Air Heat Exchangers*** or either ***Air Cooled*** or ***Water-Cooled Air Conditioners*** should be considered.

Outdoor operations require weather protection and external protective features. Also see ***Advantage Indoor/Outdoor Series*** and ***Integrity NEMA 4/4X Series.***

General specifications common to all KOOLTRONIC Heat Exchangers are on the first page of this section.

KOOLTRONIC also designs and manufactures a variety of heat exchangers to meet *unique* specifications. We invite your inquiries about our modification and custom-design capabilities.

CALL 1-800-321-KOOL (5665)
or FAX 609-466-1114

TECHNICAL DATA*

Model	Volts	Power Amps	Power Watts	Maximum Temperature ºF Enclosure	Maximum Temperature ºF Ambient	Performance Watts/ºF (Air In)	Approx. Weight lbs	Approx. Weight kg
KTHE200	115	0.6	52	160	-20 to 125	17	22	10
K2THE200	230	0.3	52	160	-20 to 125	17	22	10

STANDARD FEATURES

- CFC-free Refrigerant
- Closed-Loop Cooling
- Filter
- Heavy-Duty Steel Shell with Baked Powder Finish
- Modified Heat Pipe Design
- UL/CSA Ball-Bearing Motors

ACCESSORIES AND OPTIONS

	Page
■ Filter Recoating Adhesive	118
■ Low Airflow Detector	118
■ Other voltages and frequencies	✦
■ Replacement Filters	119
■ Special materials or finishes	✦
■ Special motors, line cords, or connectors	✦
■ Stainless or Aluminum Shell	118
■ Temperature Alarm	118

PERFORMANCE CHART*

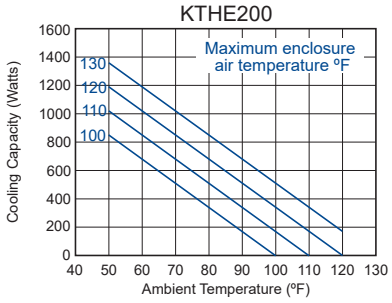

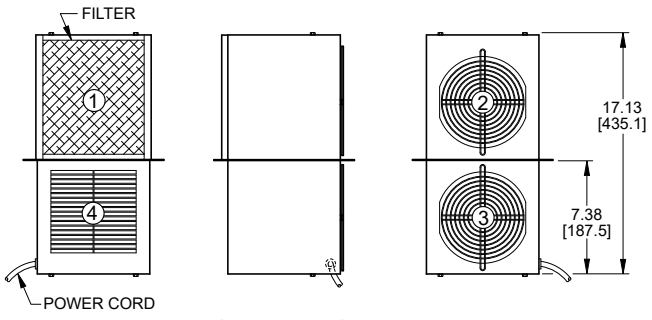

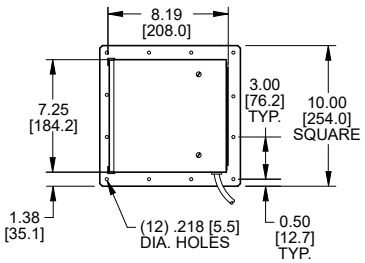

① FILTERED CONDENSER AIR INLET (Ambient Air In)
② CONDENSER OUTLET (Warm Ambient Air Out)
③ WARM AIR RETURN FROM ENCLOSURE
④ COOL AIR OUTLET TO ENCLOSURE

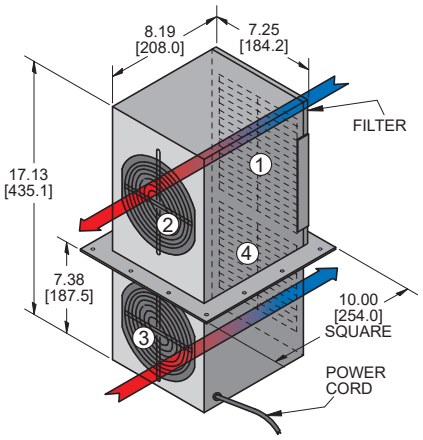

Dimensions, inches [mm], are for reference only and subject to change.

* 60 Hz. operation. For 50 Hz. operation, consult Kooltronic.

✦ Contact KOOLTRONIC for information.

KPHE SERIES WATER-TO-AIR PANEL-MOUNTED HEAT EXCHANGERS

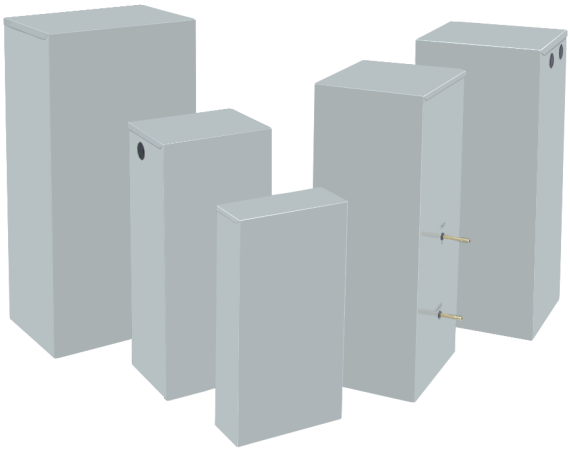

NEMA TYPE 12 & 3R MAINTAINED

DESCRIPTION

KOOLTRONIC ***Water-to-Air Heat Exchangers*** provide uniform cooling in a closed-loop system where a reliable source of clean, cool water is available. The ***KPHE Series*** is designed primarily for use in harsh environments with cooling requirements in excess of the capabilities of ***Air-to-Air Heat Exchangers.*** They are particularly useful in highly contaminated environments that would require very frequent cleaning or changing of ambient air filters, or require frequent cleaning of the heat exchanger core. KOOLTRONIC ***Water-to-Air Heat Exchangers*** can furnish greater cooling capacities than air-to-air models, depending on water temperature and rate of flow. Ambient air is sealed out; heat transfer surfaces remain clean.

The higher cooling ability of the ***KPHE Series*** depends on the temperature of the cooling water. Thus, if the water is cold enough, the temperature of the air delivered to the electronics cabinet can actually be lower than that provided by air conditioners, at less cost.

KPHE Series Heat Exchangers are available in five sizes and capacities. All models are UL/CUL Listed and meet NEMA 12 and NEMA 3R requirements. A complete range of accessories and options is available for both units, adding to their versatility.

Outdoor operations require weather protection and external protective features.

General specifications common to all KOOLTRONIC Heat Exchangers are on the first page of this section.

KOOLTRONIC also designs and manufactures a variety of heat exchangers to meet *unique* specifications. We invite your inquiries about our modification and custom-design capabilities.

CALL 1-800-321-KOOL (5665)
or FAX 609-466-1114

WATER-TO-AIR

STANDARD FEATURES

- All Models UL/CUL Listed
- Capable of Below-Ambient Cooling
- Heavy-duty Steel Shell with Baked Powder Finish
- NEMA 12 & 3R Ratings Maintained (UL50)
- Six foot (minimum) 3-wire power cord
- UL/CSA ball-bearing motors

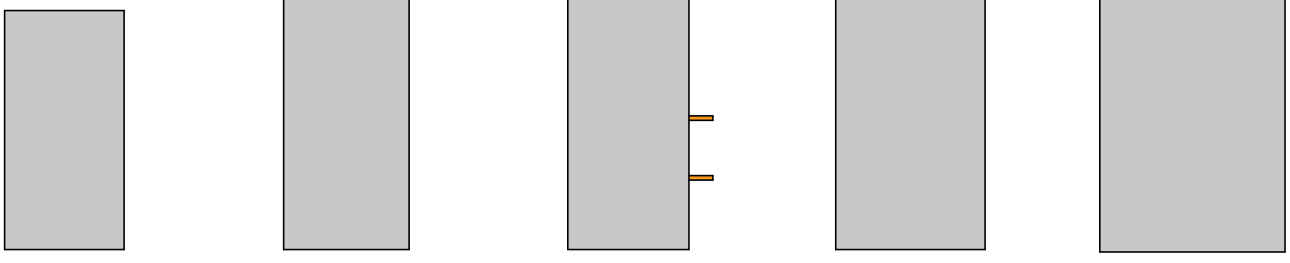

KPHE20
20 W/ºF Air In at 0.25GPM
21 W/ºF Air In at 0.50GPM
20"H x 10"W x 4"D

KPHE24
33 W/ºF Air In at 1GPM
37 W/ºF Air In at 2GPM
24"H x 10"W x 8"D

KPHE28
42 W/ºF Air In at 1GPM
50 W/ºF Air In at 2GPM
28"H x 10"W x 11"D

KPHE30
58 W/ºF Air In at 1GPM
74 W/ºF Air In at 2GPM
30"H x 12"W x 11"D

KPHE32
80 W/ºF Air In at 1GPM
112 W/ºF Air In at 2GPM
32"H x 15"W x 11"D

KPHE20 WATER-TO-AIR
PANEL-MOUNTED HEAT EXCHANGERS

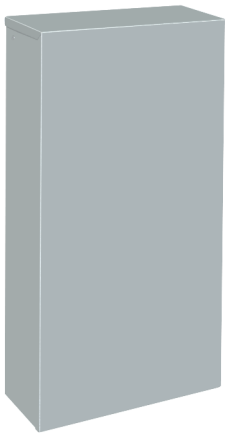

TECHNICAL DATA*

Model	NEMA Rating	Volts	Power Amps	Power Watts	Maximum Inlet Water Temp. ºF	Performance Watts/ºF 0.25GPM	Performance Watts/ºF 0.50GPM	Approx. Weight lbs	Approx. Weight kg
KPHE20	12 & 3R	115	0.30	33	85	20.5	21.5	15	7
K2PHE20	12 & 3R	230	0.13	25	85	20.5	21.5	15	7

STANDARD FEATURES

- Below-Ambient Cooling Capability
- Closed-Loop Cooling
- Heavy-duty Steel Construction with Baked Powder Finish
- NEMA 12 & 3R Ratings Maintained (UL50)
- UL/CSA Ball-Bearing Motors
- UL/CUL Listed

ACCESSORIES AND OPTIONS

	Page
Internal Corrosion Protection	118
Other voltages and frequencies	✦
Special materials or finishes	✦
Special motors, line cords, or connectors	✦

c UL us **NEMA** TYPE 12 & 3R MAINTAINED

PERFORMANCE CHART*

KPHE20 - .50 GPM

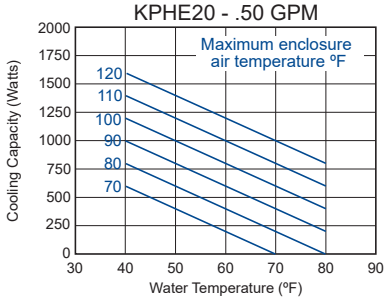

For performance at other flow rates contact the factory or visit kooltronic.com.

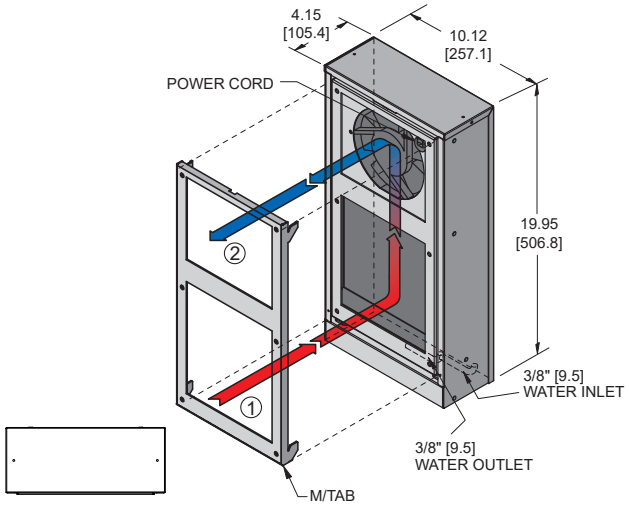

① WARM AIR RETURN FROM ENCLOSURE

② COOL AIR OUTLET TO ENCLOSURE

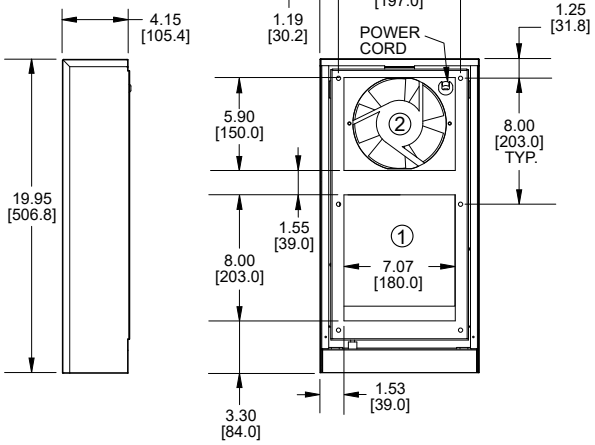

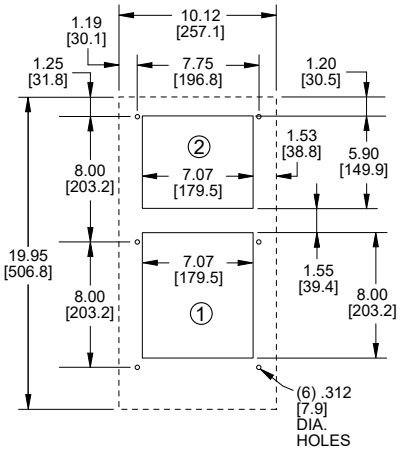

MOUNTING PLAN

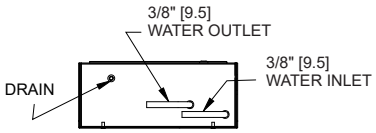

Dimensions, inches [mm], are for reference only and subject to change.

* 60 Hz. operation. For 50 Hz. operation, consult Kooltronic.

✦ Contact KOOLTRONIC for information.

KPHE24 WATER-TO-AIR PANEL-MOUNTED HEAT EXCHANGERS

TECHNICAL DATA*

Model	NEMA Rating	Volts	Power Amps	Power Watts	Maximum Inlet Water Temp. ºF	Performance Watts/ºF 1GPM	Performance Watts/ºF 2GPM	Approx. Weight lbs	Approx. Weight kg
KPHE24	12 & 3R	115	0.64	72	85	33	37	34	15
K2PHE24	12 & 3R	230	0.31	70	85	33	37	34	15

STANDARD FEATURES

- Below-Ambient Cooling Capability
- Closed-Loop Cooling
- Epoxy-Coated Heat Exchanger Coils
- Heavy-duty Steel Construction with Baked Powder Finish
- NEMA 12 & 3R Ratings Maintained (UL50)
- UL/CSA Ball-Bearing Motors
- UL/CUL Listed

ACCESSORIES AND OPTIONS

	Page
Automatic Water Flow Control	118
High Water Level Detector	118
Internal Corrosion Protection	118
Low Airflow Detector	118
Other voltages and frequencies	✦
Special materials or finishes	✦
Special motors, line cords, or connectors	✦
Temperature Alarm	118

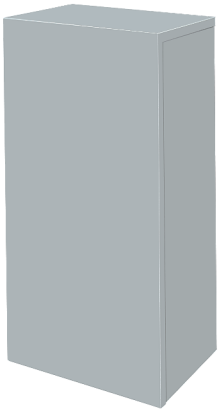

NEMA TYPE 12 & 3R MAINTAINED

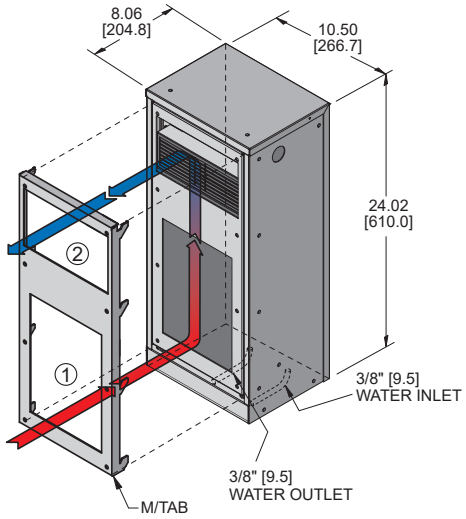

① WARM AIR RETURN FROM ENCLOSURE

② COOL AIR OUTLET TO ENCLOSURE

PERFORMANCE CHART*

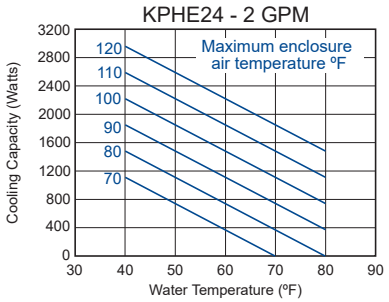

For performance at other flow rates contact the factory or visit kooltronic.com.

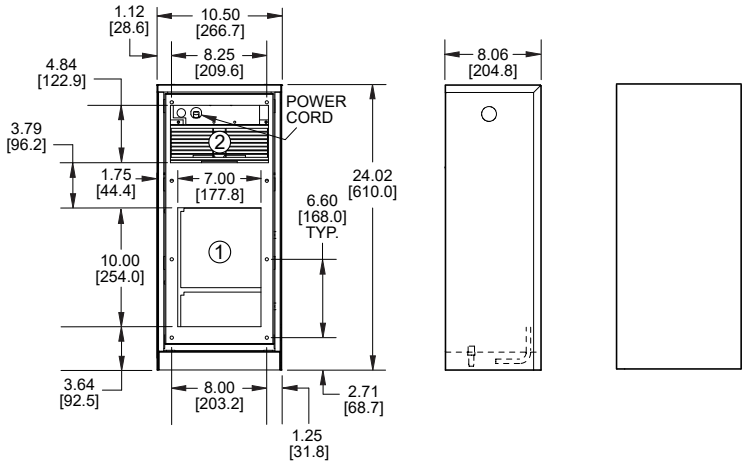

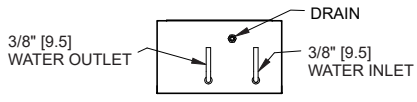

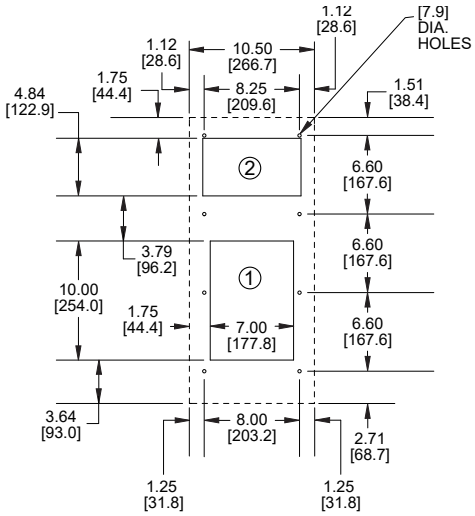

MOUNTING PLAN

Dimensions, inches [mm], are for reference only and subject to change.

* 60 Hz. operation. For 50 Hz. operation, consult Kooltronic.

✦ Contact KOOLTRONIC for information.

KPHE28 WATER-TO-AIR
PANEL-MOUNTED HEAT EXCHANGERS

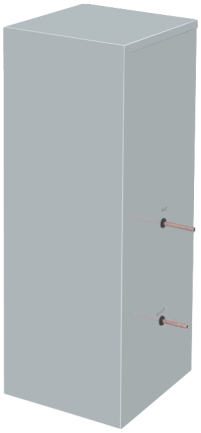

NEMA TYPE12 & 3R MAINTAINED

TECHNICAL DATA*

Model	NEMA Rating	Volts	Power Amps	Power Watts	Maximum Inlet Water Temp. ºF	Performance Watts/ºF 1GPM	Performance Watts/ºF 2GPM	Approx. Weight lbs	Approx. Weight kg
KPHE28	12 & 3R	115	1.2	140	85	42	50	44	20
K2PHE28	12 & 3R	230	0.6	140	85	42	50	44	20

STANDARD FEATURES

- Below-Ambient Cooling Capability
- Closed-Loop Cooling
- Epoxy-Coated Heat Exchanger Coils
- Heavy-duty Steel Construction with Baked Powder Finish
- NEMA 12 & 3R Ratings Maintained (UL50)
- UL/CSA Ball-Bearing Motors
- UL/CUL Listed

ACCESSORIES AND OPTIONS

	Page
Automatic Water Flow Control	118
High Water Level Detector	118
Internal Corrosion Protection	118
Low Airflow Detector	118
Other voltages and frequencies	✦
Special materials or finishes	✦
Special motors, line cords, or connectors	✦
Temperature Alarm	118

PERFORMANCE CHART*

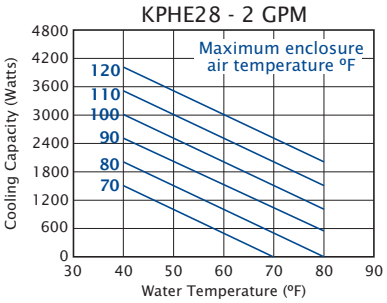

For performance at other flow rates contact the factory or visit kooltronic.com.

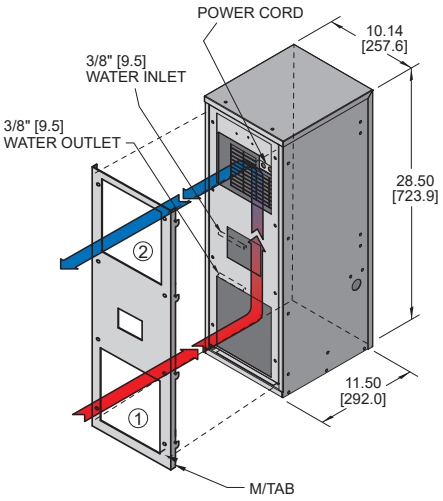

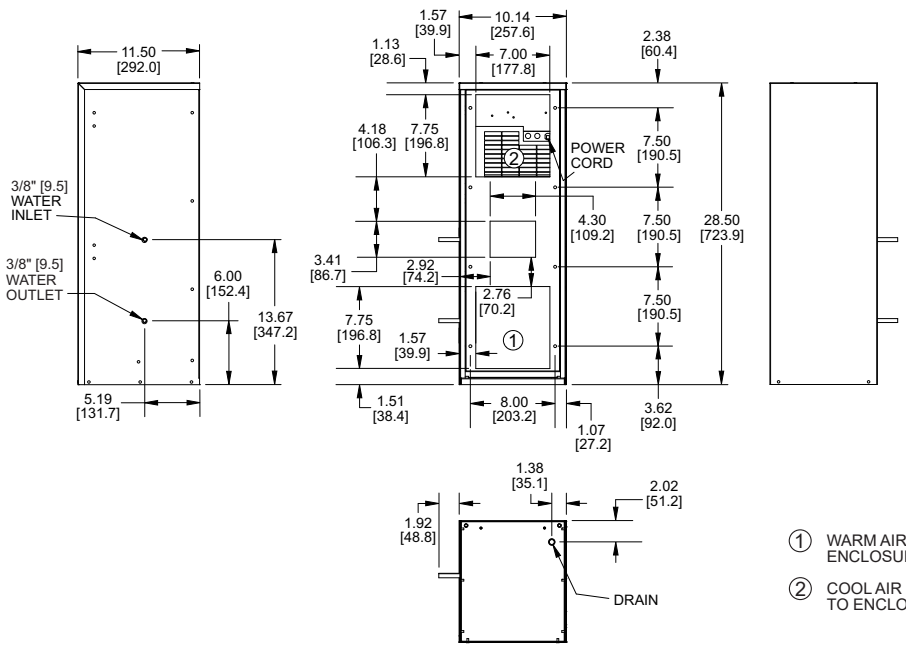

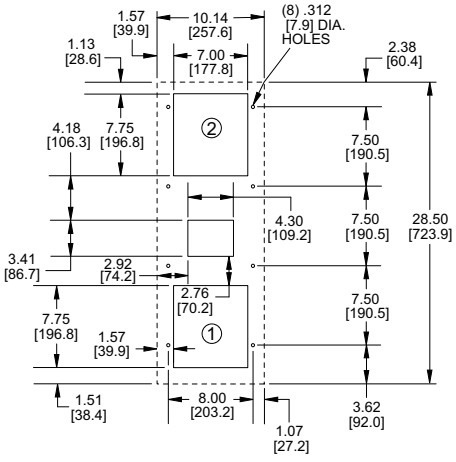

① WARM AIR RETURN FROM ENCLOSURE

② COOL AIR OUTLET TO ENCLOSURE

Dimensions, inches [mm], are for reference only and subject to change.

* 60 Hz. operation. For 50 Hz. operation, consult Kooltronic.

✦ Contact KOOLTRONIC for information.

KPHE30 & KPHE32 WATER-TO-AIR PANEL-MOUNTED HEAT EXCHANGERS

TECHNICAL DATA*

Model	Nema Rating	Volts	Power Amps	Power Watts	Maximum Inlet Water Temp. ºF	Performance Watts/ºF 1GPM	Performance Watts/ºF 2GPM	Approx. Weight lbs	Approx. Weight kg
KPHE30	12 & 3R	115	1.16	133	85	58	74	53	24
K2PHE30	12 & 3R	230	0.57	128	85	58	74	53	24
KPHE32	12 & 3R	115	3.70	370	85	80	112	66	30
K2PHE32	12 & 3R	230	1.50	334	85	80	112	66	30

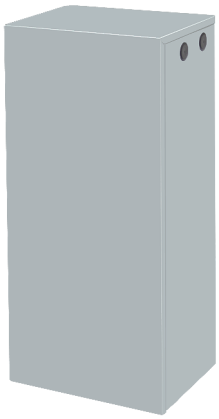

NEMA TYPE 12 & 3R MAINTAINED

STANDARD FEATURES

- Below-Ambient Cooling Capability
- Closed-Loop Cooling
- Heavy-duty Steel Construction with Baked Powder Finish
- NEMA 12 & 3R Ratings Maintained (UL50)
- UL/CSA Ball-Bearing Motors
- UL/CUL Listed

ACCESSORIES AND OPTIONS

	Page
Automatic Water Flow Control	118
High Water Level Detector	118
Internal Corrosion Protection	118
Low Airflow Detector	118
Other voltages and frequencies	✦
Special materials or finishes	✦
Special motors, line cords, or connectors	✦
Temperature Alarm	118

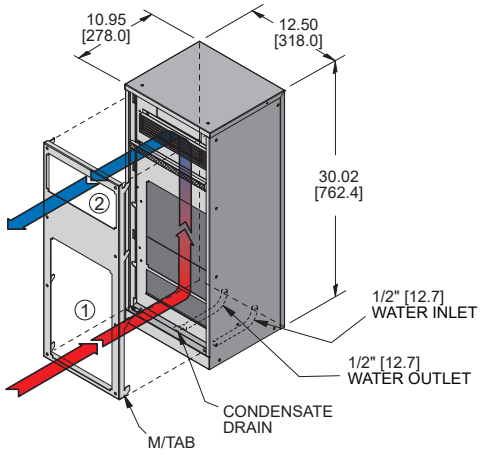

PERFORMANCE CHARTS*

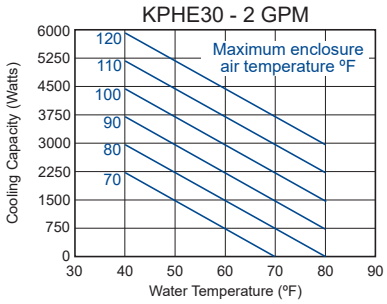

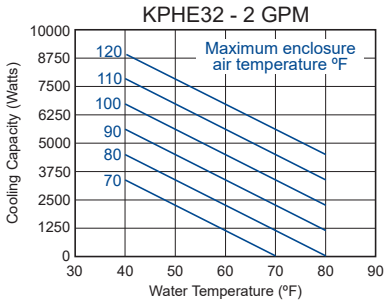

For performance at other flow rates contact the factory or visit kooltronic.com.

DIMENSIONS

	KPHE30		KPHE32	
A	30.02	[763.0]	32.02	[813.3]
B	12.50	[317.5]	15.50	[393.7]

① WARM AIR RETURN FROM ENCLOSURE

② COOL AIR OUTLET TO ENCLOSURE

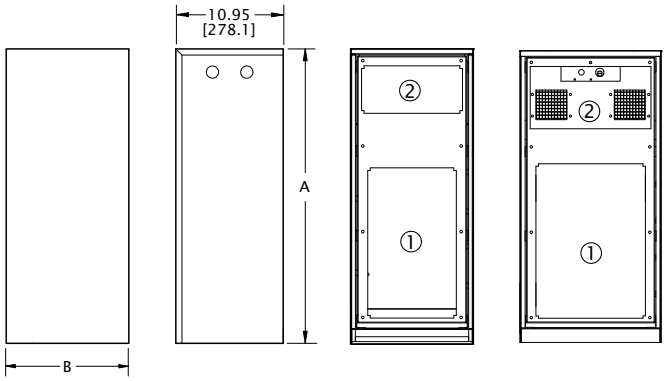

KPHE30/KPHE32 KPHE30 KPHE32

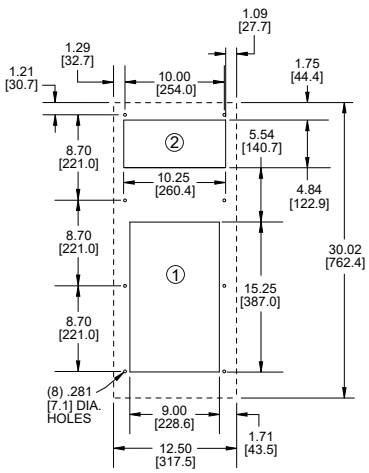

MOUNTING PLAN KPHE30

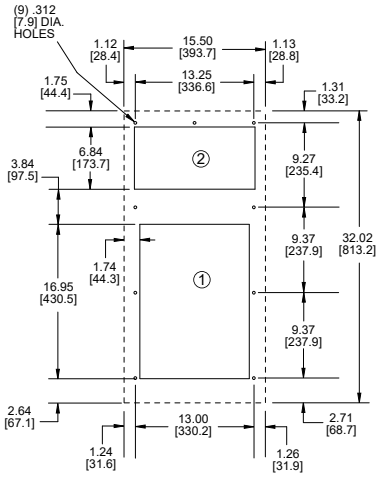

MOUNTING PLAN KPHE32

Dimensions, inches [mm], are for reference only and subject to change.

* 60 Hz. operation. For 50 Hz. operation, consult Kooltronic.

✦ Contact KOOLTRONIC for information.

KNHE NEMA 4/4X WATER-TO-AIR PANEL-MOUNTED HEAT EXCHANGERS

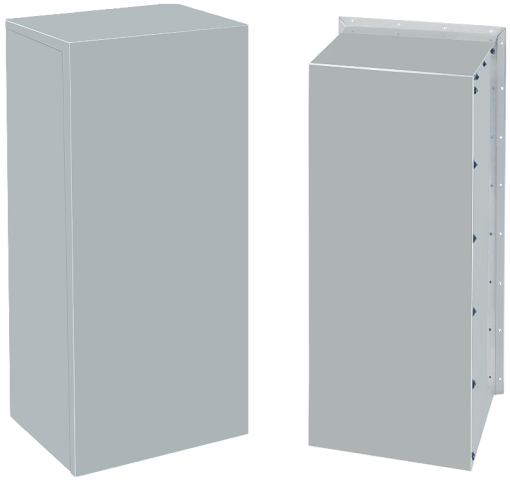

DESCRIPTION

KOOLTRONIC ***Water-to-Air Heat Exchangers*** provide uniform cooling in a closed-loop system where a reliable source of clean, cool water is available. The ***KNHE Series*** was designed primarily for use in harsh environments with cooling requirements in excess of the capabilities of air-to-air heat exchangers or air conditioners. They are particularly useful in highly contaminated environments that would require very frequent cleaning or changing of ambient air filters, or require frequent cleaning of the heat exchanger core. KOOLTRONIC ***KNHE NEMA 4/4X Water-to-Air Heat Exchangers*** can furnish greater cooling capacities than air-to-air models, depending on water temperature and rate of flow. Ambient air is sealed out; heat transfer surfaces remain clean.

The higher cooling capacity of the ***KNHE Series*** depends on the temperature of the cooling water. Thus, if the water is cold enough, the temperature of the air delivered to the electronics cabinet can actually be lower than that provided by air conditioners, at less cost. These units combine the best features of the NEMA 4/4X heat exchangers with the increased cooling capacity offered by the water-to-air models, in addition to the added benefit of compact size.

General specifications common to all KOOLTRONIC Heat Exchangers are on the first page of this Section.

KOOLTRONIC also designs and manufactures a variety of heat exchangers to meet *unique* specifications. We invite your inquiries about our modification and custom-design capabilities.

CALL 1-800-321-KOOL (5665)
or FAX 609-466-1114

c UL us

NEMA
TYPE 4/4X
MAINTAINED

WATER-TO-AIR NEMA 4/4X

STANDARD FEATURES

- All Models are UL/CUL Listed
- Capable of Below-Ambient Cooling
- Closed-Loop Cooling
- NEMA 4/4X Ratings Maintained (UL50)
- Powerful centrifugal blowers
- Rugged heavy-duty Steel Shell with Baked Powder Finish
- Six foot [1.8m] (minimum) 3-wire power cord
- Stainless Steel Shell

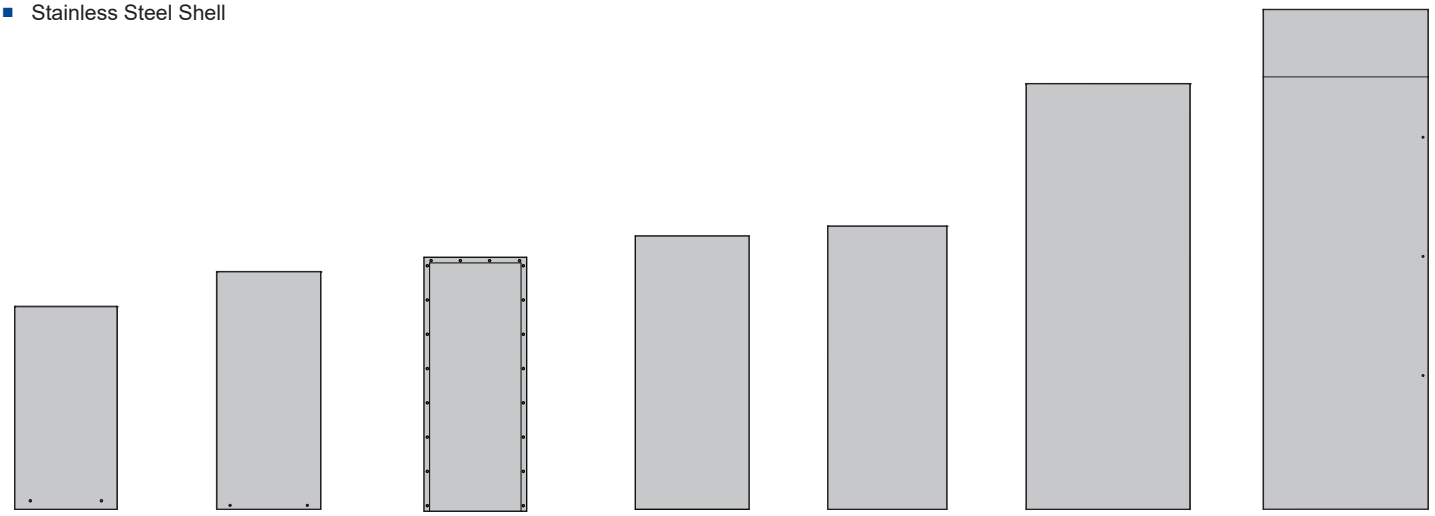

KNHE20	KNHE24	KNHE28	KNHE30	KNHE32	KNHE48	KNHE60
20.5 W/ºF at .25 GPM 21.5 W/ºF at .50 GPM	33 W/ºF at 1 GPM 37 W/ºF at 2 GPM	42 W/ºF at 1 GPM 50 W/ºF at 2 GPM	58 W/ºF at 1 GPM 74 W/ºF at 2 GPM	80 W/ºF at 1 GPM 112 W/ºF at 2 GPM	150 W/ºF at 3 GPM 165 W/ºF at 4 GPM	190 W/ºF at 3 GPM 215 W/ºF at 4 GPM
20"H x 10"W x 4"D	24"H x 11"W x 8"D	28"H x 11"W x 11"D	30"H x 12"W x 11"D	32"H x 16"W x 11"D	48"H x 20"W x 9"D	61"H x 20"W x 9"D

KNHE20 WATER-TO-AIR PANEL-MOUNTED HEAT EXCHANGERS

TECHNICAL DATA*

Model	Volts	Power Amps	Power Watts	Maximum Inlet Water Temp. °F (°C)	Performance Watts/°F (°C) 0.25GPM	Performance Watts/°F (°C) 0.50GPM	BTU/H (Watts) @ 95°F(35°C) Enclosure Air Temp. 50°F(10°C) Inlet Water Temp. 0.25GPM	BTU/H (Watts) @ 95°F(35°C) Enclosure Air Temp. 50°F(10°C) Inlet Water Temp. 0.50GPM	Approx. Weight lbs	Approx. Weight kg
KNHE20	115	0.30	33	85 (29)	20.5 (36.9)	21.5 (38.7)	3,148 (923)	3,301 (968)	15	7
K2NHE20	230	0.13	25	85 (29)	20.5 (36.9)	21.5 (38.7)	3,148 (923)	3,301 (968)	15	7

STANDARD FEATURES

- Closed-Loop Cooling
- NEMA 4/4X Ratings Maintained (UL50)
- Stainless Steel Shell
- UL/CUL Listed

ACCESSORIES AND OPTIONS

	Page
■ Internal Corrosion Protection	118
■ Other voltages and frequencies	✦
■ Special materials or finishes	✦
■ Special motors, line cords, or connectors	✦



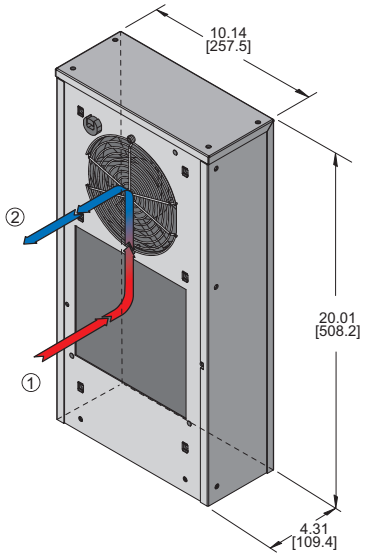

PERFORMANCE CHART*

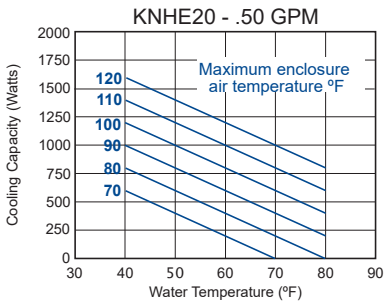

c UL us

NEMA
TYPE 4/4X MAINTAINED

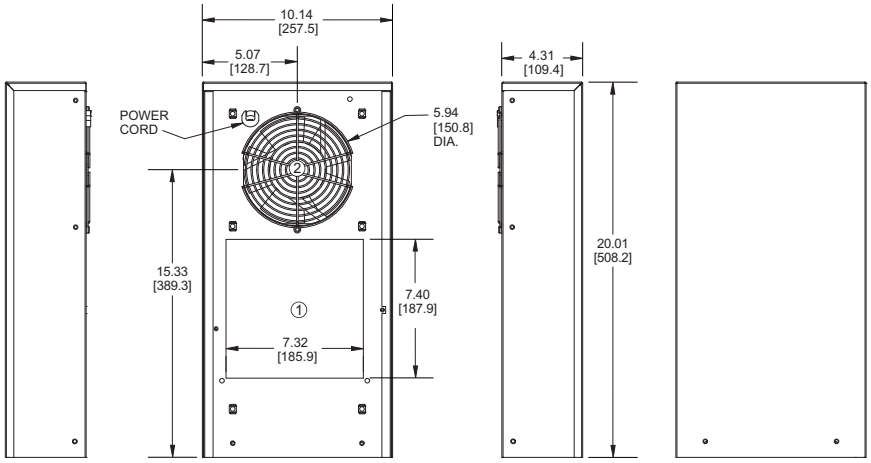

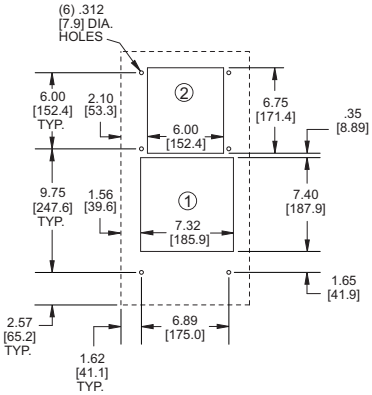

MOUNTING PLAN

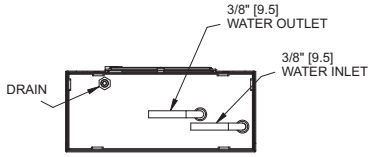

① WARM AIR RETURN FROM ENCLOSURE

② COOL AIR OUTLET TO ENCLOSURE

Dimensions, inches [mm], are for reference only and subject to change.

* 60 Hz. operation. For 50 Hz. operation, consult Kooltronic.

✦ Contact KOOLTRONIC for information.

KNHE24 WATER-TO-AIR
PANEL-MOUNTED HEAT EXCHANGERS

TECHNICAL DATA*

Model	Volts	Power Amps	Power Watts	Maximum Inlet Water Temp. °F (°C)	Performance Watts/°F (°C) 1GPM	Performance Watts/°F (°C) 2GPM	BTU/H (Watts) @ 95°F(35°C) Enclosure Air Temp. 50°F(10°C) Inlet Water Temp. 1GPM	BTU/H (Watts) @ 95°F(35°C) Enclosure Air Temp. 50°F(10°C) Inlet Water Temp. 2GPM	Approx. Weight lbs	Approx. Weight kg
KNHE24	115	0.64	72	85 (29)	33 (59)	37 (67)	5,067 (1,485)	5,681 (1,665)	34	15
K2NHE24	230	0.31	70	85 (29)	33 (59)	37 (67)	5,067 (1,485)	5,681 (1,665)	34	15



c UL us

NEMA
TYPE 4/4X
MAINTAINED

STANDARD FEATURES

- Closed-Loop Cooling
- Epoxy-Coated Heat Exchanger Coils
- NEMA 4/4X Ratings Maintained (UL50)
- Stainless Steel Shell
- UL/CUL Listed

ACCESSORIES AND OPTIONS

	Page
■ Automatic Water Flow Control	118
■ High Water Level Detector	118
■ Internal Corrosion Protection	118
■ Low Airflow Detector	118
■ Other voltages and frequencies	✦
■ Special materials or finishes	✦
■ Special motors, line cords, or connectors	✦
■ Temperature Alarm	118

PERFORMANCE CHART*

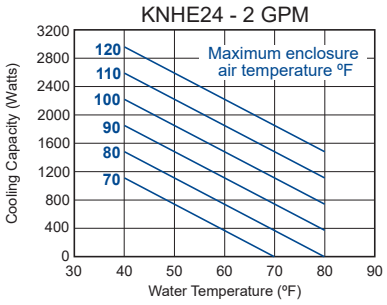

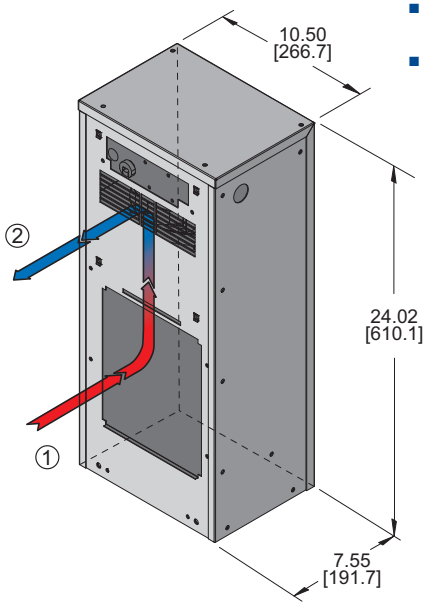

① WARM AIR RETURN FROM ENCLOSURE

② COOL AIR OUTLET TO ENCLOSURE

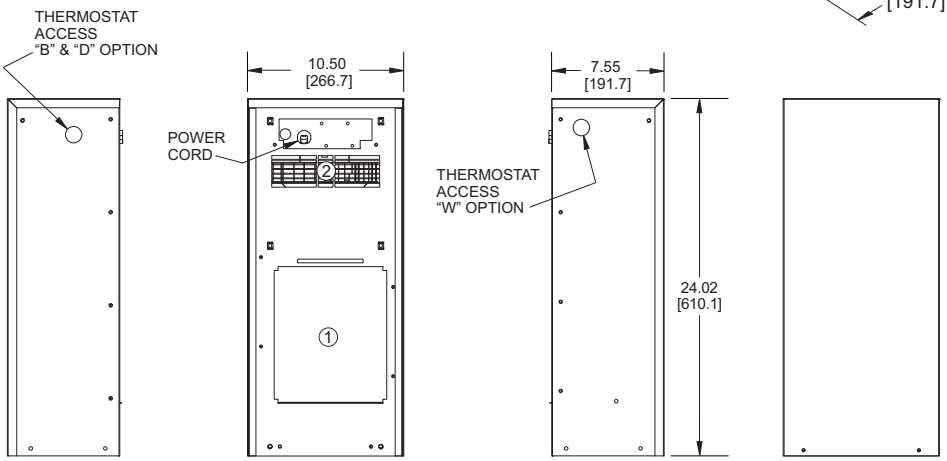

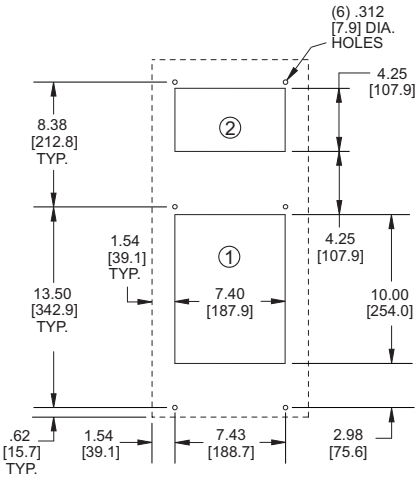

MOUNTING PLAN

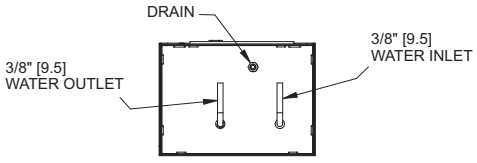

Dimensions, inches [mm], are for reference only and subject to change.

* 60 Hz. operation. For 50 Hz. operation, consult Kooltronic.

✦ Contact KOOLTRONIC for information.

KNHE28 WATER-TO-AIR PANEL-MOUNTED HEAT EXCHANGERS

TECHNICAL DATA*

Model	Volts	Power Amps	Power Watts	Maximum Inlet Water Temp. °F (°C)	Performance Watts/°F (Watts/°C) 1GPM	Performance Watts/°F (Watts/°C) 2GPM	BTU/H (Watts) @ 95°F(35°C) Enclosure Air Temp. 50°F(10°C) Inlet Water Temp. 1GPM	BTU/H (Watts) @ 95°F(35°C) Enclosure Air Temp. 50°F(10°C) Inlet Water Temp. 2GPM	Approx. Weight lbs	Approx. Weight kg
KNHE28	115	1.2	140	85 (29)	42 (76)	50 (90)	6,449 (1,890)	7,677 (2,250)	44	20
K2NHE28	230	0.6	140	85 (29)	42 (76)	50 (90)	6,449 (1,890)	7,677 (2,250)	44	20

STANDARD FEATURES

- Closed-Loop Cooling
- Epoxy-Coated Heat Exchanger Coils
- Gasketed Flanges
- NEMA 4/4X Ratings Maintained (UL50)
- Stainless Steel Shell
- UL/CUL Listed

ACCESSORIES AND OPTIONS

	Page
Automatic Water Flow Control	118
High Water Level Detector	118
Internal Corrosion Protection	118
Low Airflow Detector	118
Other voltages and frequencies	✦
Special materials or finishes	✦
Special motors, line cords, or connectors	✦
Temperature Alarm	118

c UL us

NEMA
TYPE 4/4X MAINTAINED



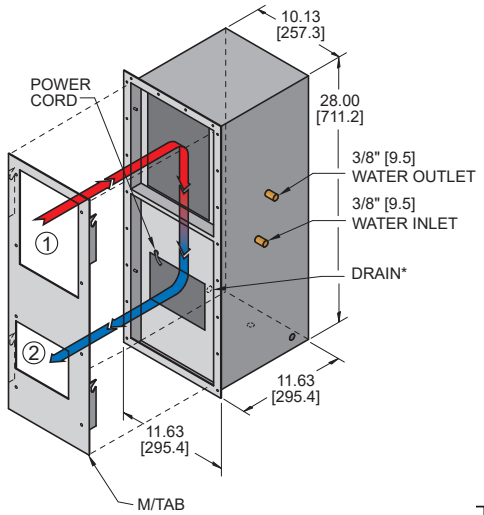

PERFORMANCE CHART*

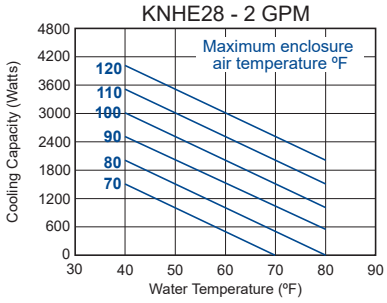

① WARM AIR RETURN FROM ENCLOSURE

② COOL AIR OUTLET TO ENCLOSURE

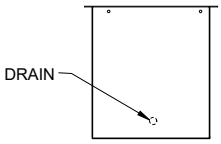

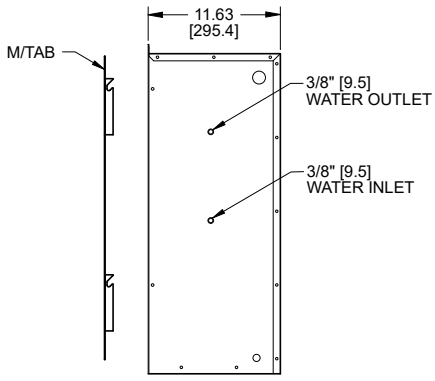

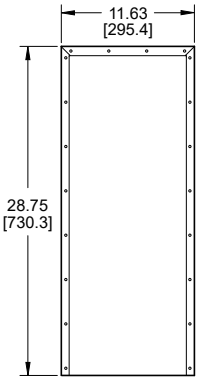

MOUNTING PLAN UNIT

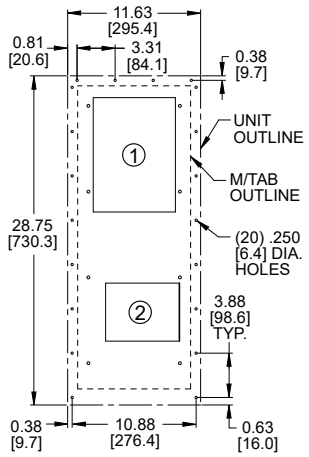

MOUNTING PLAN M/TAB

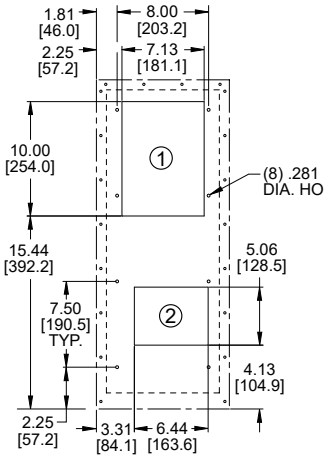

Dimensions, inches [mm], are for reference only and subject to change.

* 60 Hz. operation. For 50 Hz. operation, consult Kooltronic.

✦ Contact KOOLTRONIC for information.

KNHE30 WATER-TO-AIR PANEL-MOUNTED HEAT EXCHANGERS

TECHNICAL DATA*

Model	Volts	Power Amps	Power Watts	Maximum Inlet Water Temp. °F (°C)	Performance Watts/°F (Watts/°C) 1GPM	Performance Watts/°F (Watts/°C) 2GPM	BTU/H (Watts) @ 95°F(35°C) Enclosure Air Temp. 50°F(10°C) Inlet Water Temp. 1GPM	BTU/H (Watts) @ 95°F(35°C) Enclosure Air Temp. 50°F(10°C) Inlet Water Temp. 2GPM	Approx. Weight lbs	Approx. Weight kg
KNHE30	115	1.16	133	85 (29)	58 (104)	74 (133)	8,906 (2,610)	11,362 (3,330)	53	24
K2NHE30	230	0.57	128	85 (29)	58 (104)	74 (133)	8,906 (2,610)	11,362 (3,330)	53	24

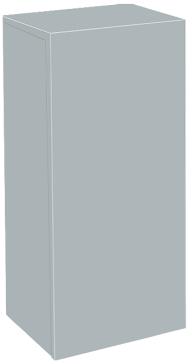

NEMA TYPE 4/4X MAINTAINED

STANDARD FEATURES

- Closed-Loop Cooling
- NEMA 4/4X Ratings Maintained (UL50)
- Stainless Steel Shell
- UL/CUL Listed

ACCESSORIES AND OPTIONS

	Page
Automatic Water Flow Control	118
High Water Level Detector	118
Internal Corrosion Protection	118
Low Airflow Detector	118
Other voltages and frequencies	✦
Special materials or finishes	✦
Special motors, line cords, or connectors	✦
Temperature Alarm	118

PERFORMANCE CHART*

KNHE30 - 2 GPM

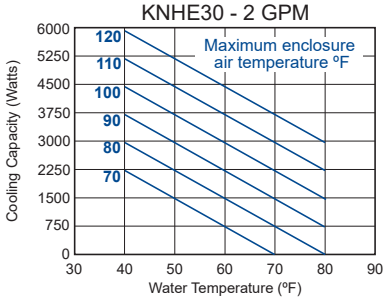

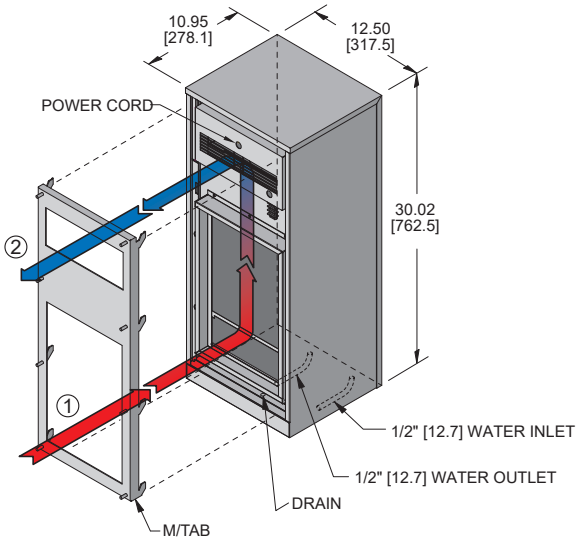

MOUNTING PLAN

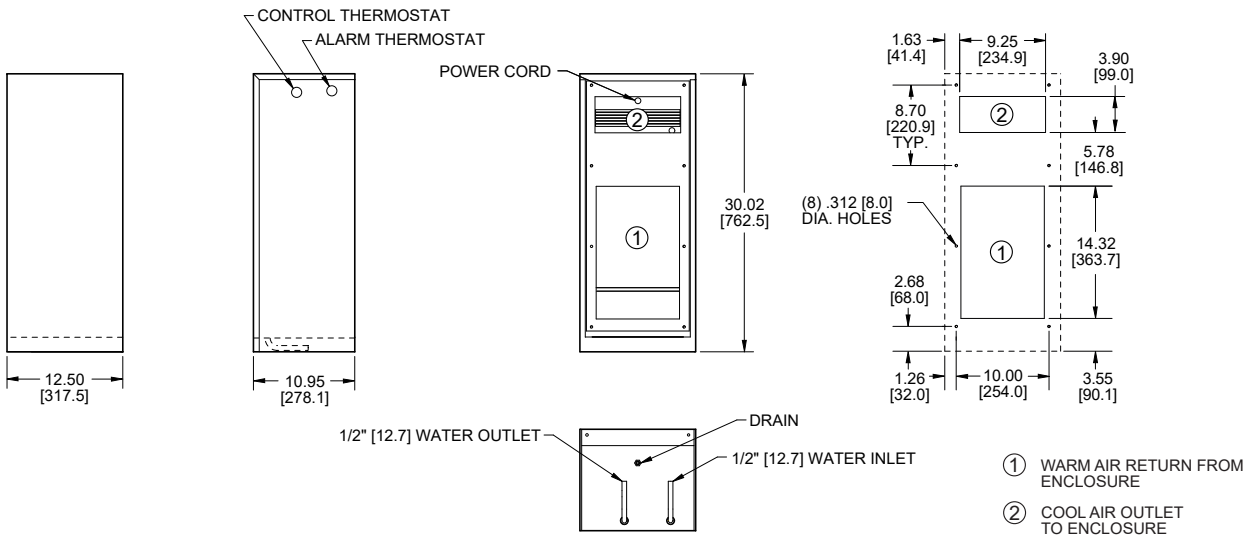

Dimensions, inches [mm], are for reference only and subject to change.

* 60 Hz. operation. For 50 Hz. operation, consult Kooltronic.

✦ Contact KOOLTRONIC for information.

KNHE32 WATER-TO-AIR PANEL-MOUNTED HEAT EXCHANGERS

TECHNICAL DATA*

Model	Volts	Power		Maximum Inlet Water Temp.	Performance Watts/ºF (ºC)		BTU/H (Watts) @ 95ºF(35ºC) Enclosure Air Temp. 50ºF(10ºC) Inlet Water Temp.		Approx. Weight	
		Amps	Watts	ºF (ºC)	1GPM	2GPM	1GPM	2GPM	lbs	kg
KNHE32	115	3.7	370	85 (29)	80 (144)	112 (202)	12,284 (3,600)	17,197 (5,040)	66	30
K2NHE32	230	1.5	334	85 (29)	80 (144)	112 (202)	12,284 (3,600)	17,197 (5,040)	66	30

STANDARD FEATURES

- Closed-Loop Cooling
- NEMA 4/4X Ratings Maintained (UL50)
- Stainless Steel Shell
- UL/CUL Listed

ACCESSORIES AND OPTIONS

	Page
Automatic Water Flow Control	118
High Water Level Detector	118
Internal Corrosion Protection	118
Low Airflow Detector	118
Other voltages and frequencies	✦
Special materials or finishes	✦
Special motors, line cords, or connectors	✦
Temperature Alarm	118

NEMA TYPE 4/4X MAINTAINED

c UL us



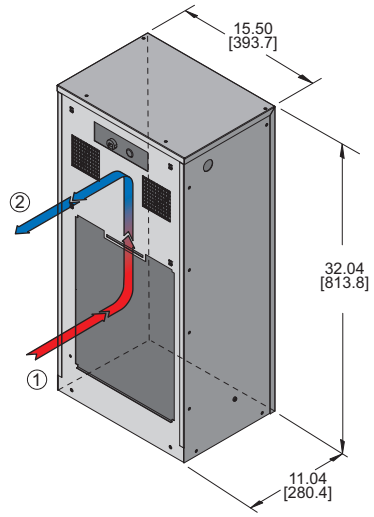

PERFORMANCE CHART*

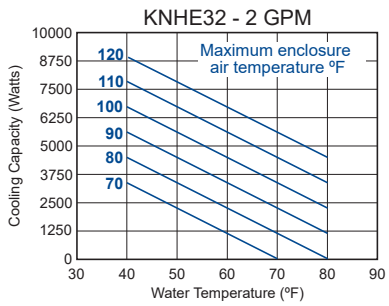

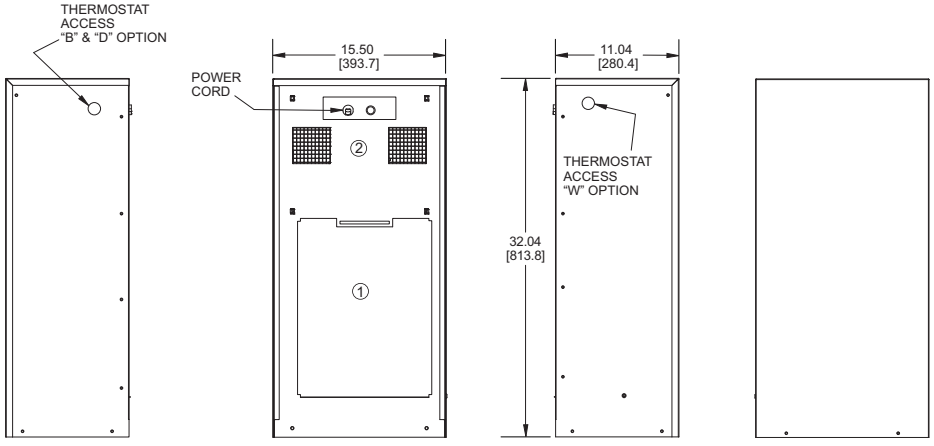

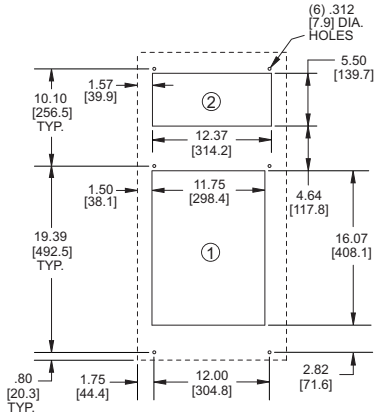

MOUNTING PLAN

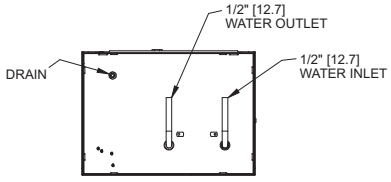

① WARM AIR RETURN FROM ENCLOSURE

② COOL AIR OUTLET TO ENCLOSURE

Dimensions, inches [mm], are for reference only and subject to change.

* 60 Hz. operation. For 50 Hz. operation, consult Kooltronic.

✦ Contact KOOLTRONIC for information.

KNHE48 WATER-TO-AIR
PANEL-MOUNTED HEAT EXCHANGERS



TECHNICAL DATA*

Model	Volts	Power Amps	Power Watts	Maximum Inlet Water Temp. ºF (ºC)	Performance Watts/ºF (Watts/ºC) 1GPM	2GPM	3GPM	4GPM
KNHE48	115	2.2	255	85 (29)	90 (162)	135 (243)	150 (270)	165 (297)
K2NHE48	230	1.1	255	85 (29)	90 (162)	135 (243)	150 (270)	165 (297)

Model	BTU/H (Watts) @ 95ºF(35ºC) Enclosure Air Temp. 50ºF(10ºC) Inlet Water Temp. 1GPM	2GPM	3GPM	4GPM	Approx. Weight lbs.	kg.
KNHE48	13,819 (4,050)	20,729 (6,079)	23,032 (6,750)	25,335 (7,425)	89	40
K2NHE48	13,819 (4,050)	20,729 (6,079)	23,032 (6,750)	25,335 (7,425)	89	40

STANDARD FEATURES

- Closed-Loop Cooling
- Epoxy-Coated Heat Exchanger Coils
- NEMA 4/4X Ratings Maintained (UL50)
- Stainless Steel Shell
- UL/CUL Listed

ACCESSORIES AND OPTIONS

	Page
Automatic Water Flow Control	118
High Water Level Detector	118
Internal Corrosion Protection	118
Low Airflow Detector	118
Other voltages and frequencies	✦
Special materials or finishes	✦
Special motors, line cords, or connectors	✦
Temperature Alarm	118

NEMA TYPE 4/4X MAINTAINED

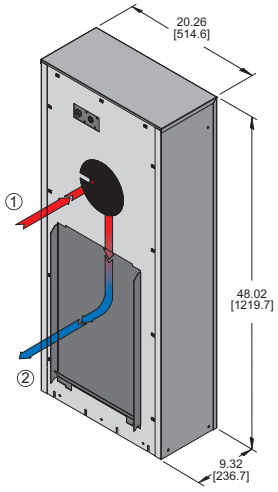

PERFORMANCE CHART*

KNHE48 - 2 GPM

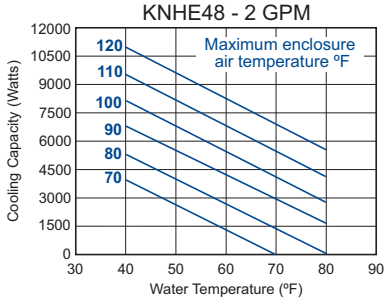

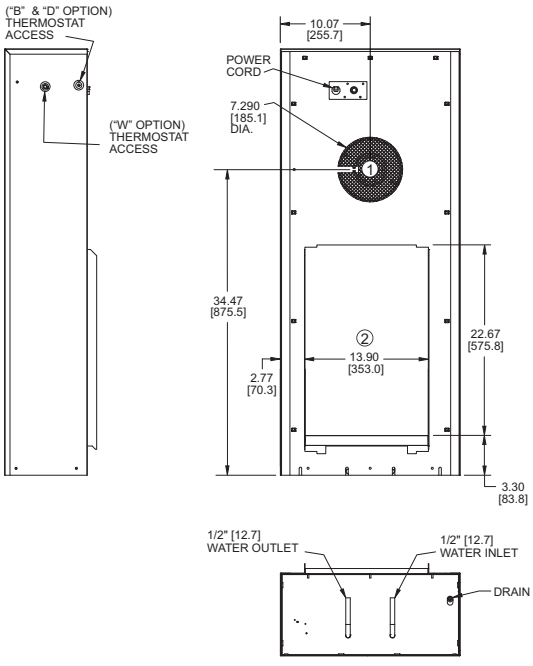

① WARM AIR RETURN FR ENCLOSURE

② COOL AIR OUTLET TO ENCLOSURE

MOUNTING PLAN

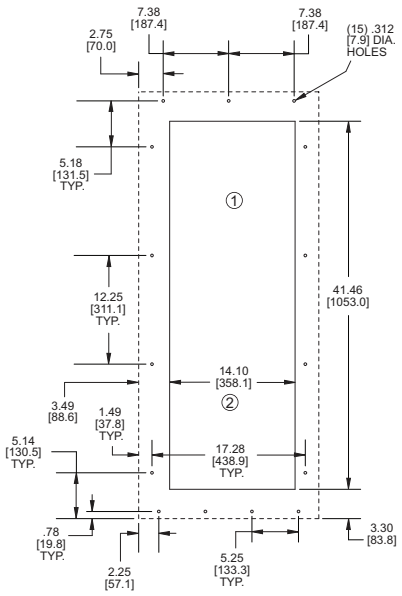

Dimensions, inches [mm], are for reference only and subject to change.

* 60 Hz. operation. For 50 Hz. operation, consult Kooltronic.

✦ Contact KOOLTRONIC for information.

KNHE60 WATER-TO-AIR PANEL-MOUNTED HEAT EXCHANGERS

TECHNICAL DATA*

Model	Volts	Power Amps	Power Watts	Maximum Inlet Water Temp. ºF (ºC)	Performance Watts/ºF (Watts/ºC) 1GPM	2GPM	3GPM	4GPM
KNHE60	115	3.8	430	85 (29)	100 (180)	175 (315)	190 (342)	215 (387)
K2NHE60	230	1.7	390	85 (29)	100 (180)	175 (315)	190 (342)	215 (387)

Model	BTU/H (Watts) @ 95ºF(35ºC) Enclosure Air Temp. 50ºF(10ºC) Inlet Water Temp. 1GPM	2GPM	3GPM	4GPM	Approx. Weight lbs	kg
KNHE60	15,355 (4,500)	26,871 (7,875)	29,174 (8,550)	33,012 (9,675)	122	55
K2NHE60	15,355 (4,500)	26,871 (7,875)	29,174 (8,550)	33,012 (9,675)	122	55

c UL us

NEMA
TYPE 4/4X MAINTAINED



STANDARD FEATURES

- Closed-Loop Cooling
- Epoxy-Coated Heat Exchanger Coils
- NEMA 4/4X Ratings Maintained (UL50)
- Stainless Steel Shell
- UL/CUL Listed

ACCESSORIES AND OPTIONS

	Page
Automatic Water Flow Control	118
High Water Level Detector	118
Internal Corrosion Protection	118
Low Airflow Detector	118
Other voltages and frequencies	✦
Special materials or finishes	✦
Special motors, line cords, or connectors	✦
Temperature Alarm	118

PERFORMANCE CHART*

KNHE60 - 2 GPM

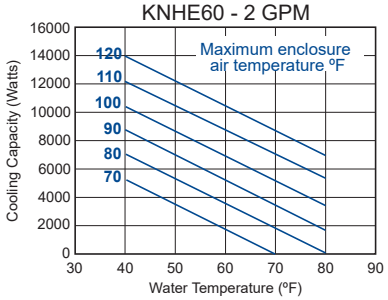

① WARM AIR RETURN FROM ENCLOSURE

② COOL AIR OUTLET TO ENCLOSURE

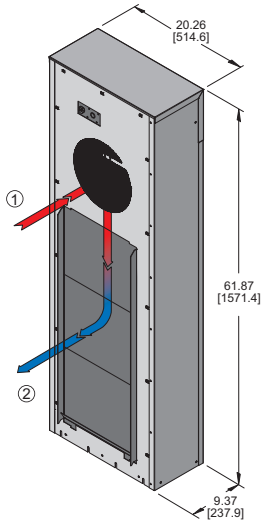

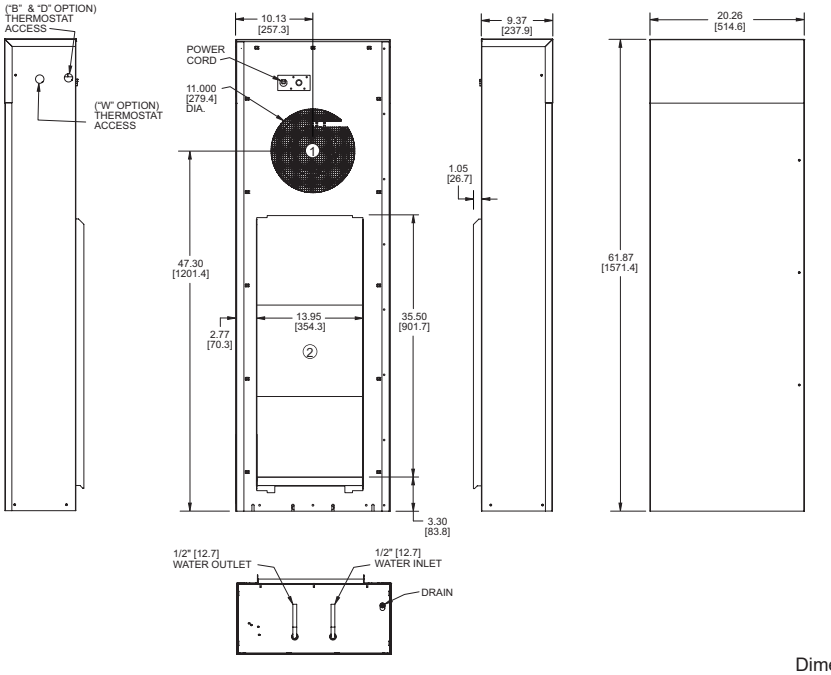

MOUNTING PLAN

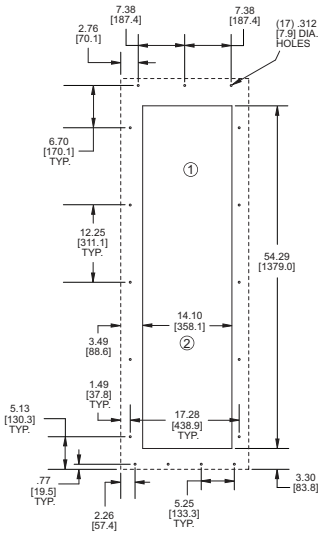

Dimensions, inches [mm], are for reference only and subject to change.

* 60 Hz. operation. For 50 Hz. operation, consult Kooltronic.

✦ Contact KOOLTRONIC for information.

HEAT EXCHANGER ACCESSORIES AND OPTIONS

FACTORY-INSTALLED OPTIONS

ALUMINUM SHELL: Where light weight and/or compatibility with appearance of aluminum enclosures are required. Unpainted Type 5052 is standard. Other types and ultraviolet-resistant baked powder finish are available.

AUTOMATIC WATER FLOW CONTROL: This control consists of a temperature control thermostat and a solenoid valve. When the temperature within the enclosure drops below the thermostat set point due to decreased load or decreasing water temperature, the thermostat closes the solenoid valve. When the temperature increases to the set point (plus a differential) the thermostat opens the solenoid valve and the supply water cools the enclosure. In most models the Automatic Water Flow Control also includes a bypass flow meter which allows a small amount of water (0.25 gpm) to pass through the heat exchanger at all times.

EPOXY-COATED ELEMENT: Fabricated to the same standards as the uncoated convoluted aluminum elements, these are made from epoxy-coated aluminum stock that exceeds 1000 hour salt spray testing requirements.

ENCLOSURE HEATER: Eliminates damaging condensation, increasing reliability of electrical enclosure components.

HIGH WATER LEVEL DETECTOR PACKAGE: Closes water-supply valve to prevent flooding if excess water accumulates in the drain pan. Signal circuit activates a user-supplied warning device. The low voltage power for the signal circuit is supplied by the user.

INTERNAL CORROSION PROTECTION: An air cured coating is sprayed on copper lines and brazed joints on the condenser side, providing a degree of protection from corrosive environments. This coating will withstand 1000 hours of salt spray per the ASTM B 117 test method. Also see Stainless Steel Cabinet or Integrity NEMA 4/4X Air Conditioners. **NOTE:** Severe operational environments such as waste water treatment and salt spray are likely to cause corrosion failure over a period of time regardless of coating. **Warranty:** Corrosive conditions may effect the warranty coverage. Consult factory for warranty limitations in corrosive environments. **NOTE:** For additional corrosion protection options, contact factory.

LIFTING EYES: A pair of heavy-gauge steel lifting eyes, attached to the side panels assist in positioning units.

LOW AIRFLOW DETECTOR: Similar to the Airflow Switch shown in the Blower Accessories Section, the switch is installed in a suitable location in the heat exchanger to detect loss of airflow, and sends a signal to a terminal block, through which user-installed wiring and warning devices are activated.

MOUNTING HINGE: (Left-hand or Right-hand) Allows the heat exchanger itself to be used as a cabinet door. (Caution: The cabinet must be able to support the full weight of the unit in open position.) Specify left-hand (LH) or right-hand (RH), determined by facing the mounting side of the heat exchanger.

STAINLESS STEEL SHELL: For applications in corrosive or other hostile environments such as those requiring Internal Corrosion Resistant Coatings, especially where chemical/moisture combinations are present.

TEMPERATURE ALARM: A thermostat is mounted inside the cabinet and attached to a sensor in the warm air return. When the air temperature increases to the set point, a signal is sent to a terminal block. User-installed wiring from the terminal block to local and/or remote warning devices (light, bell, siren, etc.) can be for normally open or normally closed operation.

CUSTOMER-INSTALLED ACCESSORIES

FILTERS: See next page.

FILTER RECOATING ADHESIVE: This compound is a superior product for recoating filters after washing. The adhesives penetrate dirt layers to keep the filter surface tacky for longer effective performance between washings. Part No. A-16 - 10 ounce container.

WEATHER PROTECTION KIT: For outdoor installations subject to invasion by rain, snow or windblown dirt, special deflectors shield the condenser air inlet and outlet ports. Air conditioners or heat exchangers installed outdoors require special exterior paint. **Note:** Units using the Weather Protection Kit are not UL Listed.

FILTERS

REPLACEMENT FILTERS: All KOOLTRONIC filters consist of a multi-layer grid of sturdy corrugated aluminum, securely held in a one-piece aluminum frame. Filters are required wherever air is drawn into an electronics enclosure or related cooling equipment to keep internal parts as clean as possible. A non-drying adhesive coating traps a high percentage of particulate matter. These filters are reuseable, they may be washed and recoated with the appropriate filter recoating adhesive. Replacements are available for those which become damaged or otherwise non-serviceable.

Model	Filter P/N	Dimensions, inches** (H x W x D)	Dimensions, mm**
Advantage▲			
KXRP28	5381F	5.38 x 8.63 x 0.38	136.7 x 219.2 x 9.7
KXRP33	7131F	7.50 x 11.50 x 0.38	190.5 x 292.1 x 9.7
KXRP47	17121F	14.50 x 17.13 x 0.50	368.3 x 435.1 x 12.7
TrimLine			
KXNP33	12251F	16.63 x 11.88 x 0.50	422.4 x 301.8 x 12.7
KXNP36	17121F	14.50 x 17.13 x 0.50	368.3 x 435.1 x 12.7
KXNP47	17121F	14.50 x 17.13 x 0.50	368.3 x 435.1 x 12.7
KXNP59	22501F	22.13 x 16.38 x 0.50	562.1 x 416.1 x 12.7
Integrity NEMA 4/4X			
KNHX32	800F	10.38 x 10.38 x 0.50	263.7 x 263.7 x 12.7
KNHX38	10871F	10.88 x 14.88 x 0.50	276.4 x 378.0 x 12.7
KNHX47	10871F	10.88 x 14.88 x 0.50	276.4 x 378.0 x 12.7
KNHX59	10871F	10.88 x 14.88 x 0.50	276.4 x 378.0 x 12.7
Standard			
KXHE60	5001F	5.00 x 9.56 x 0.50	127.0 x 242.8 x 12.7
KXHE120	100-3F	9.56 x 5.00 x 0.50	242.8 x 127.0 x 12.7
KXHE122	100-3F	9.56 x 5.00 x 0.50	242.8 x 127.0 x 12.7
KXHE125	5251F	16.63 x 4.81 x 0.50	422.4 x 122.2 x 12.7
KXHE245	7001F	16.63 x 6.63 x 0.50	422.4 x 168.4 x 12.7
KXHE365	10501F	16.63 x 10.13 x 0.50	422.4 x 257.3 x 12.7
Refrigerant-Charged			
KTHE200	9621F	7.06 x 9.63 x 0.50	179.3 x 244.6 x 12.7

** Nominal; actual size may vary slightly.
▲ Advantage Series heat exchangers are Discontinued.





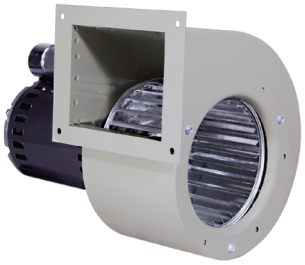





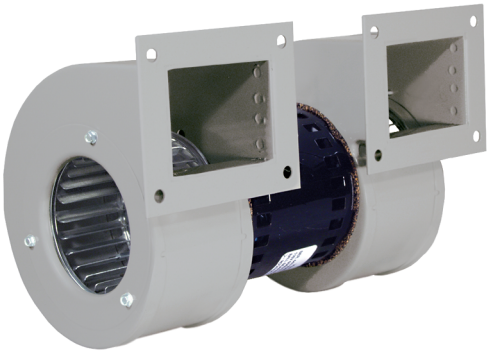

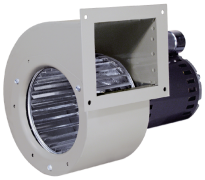

BASIC BLOWERS

KOOLTRONIC Centrifugal Blowers are engineered for performance and built for reliability. These blowers are available in five series designations to meet a multitude of design and cooling or air handling needs. They may be mounted in any position required.

Every KOOLTRONIC blower is equipped with a custom engineered ball-bearing motor designed for low temperature rise under zero static conditions. Added assurance of long, trouble-free operation is provided by the application of fan cooling or by drawing a small portion of the intake air directly through the motor and past the bearings. Operation under static pressure conditions further reduces the motor load. Service failures are almost unknown.

All KOOLTRONIC blowers are designed to isolate vibration of rotating parts from housings and mounting flanges for smooth, quiet, trouble-free operation.

These blowers are used extensively in virtually every type of cooling application in the electronics industries, as well as for a host of other industrial, medical, telecommunications and food & beverage requirements. They are also used exclusively in virtually all KOOLTRONIC Packaged Blowers, Air Conditioners and Heat Exchangers.

Popular blowers are stocked and ready to ship. Emergency shipment service is available.

Modifications to inlets or outlets, special mounting flanges, brackets, supports or other sheet metal changes are available to meet your specific application. In addition, KOOLTRONIC also designs and manufactures a variety of blowers to meet unique specifications. We invite your inquiries about our modification and custom-design capabilities.

GENERAL SPECIFICATIONS FOR ALL BASIC BLOWERS

RUGGED CONSTRUCTION: Precision-engineered heavy-gauge steel construction insures blowers stand up under tough applications.

BAKED POWDER FINISH: Durable, baked-on gray powder finish is standard on all painted units. Other finishes and colors are available.

PRECISION BALL-BEARING MOTORS: All motors, whether permanent split capacitor or shaded pole, are UL/CSA Recognized and include automatic-reset thermal overload protection. Designed for low temperature rise, KOOLTRONIC motors are also cooled by the blowers' intake air, for maximum motor life. All motors are UL Recognized and carry a Declaration of Conformity to applicable CE Standards. Special permanent lubricants perform over a broad temperature range: -20ºF (-29ºC) to 250ºF (121ºC).

Consult KOOLTRONIC for motors designed to meet military or extreme environmental specifications.

POWER: 115 VAC or 230 VAC, 50/60Hz is standard. For multi-phase power, other voltages and frequencies or brushless DC applications, consult KOOLTRONIC. **NOTE:** Some 230 Volt models may not be available or minimum purchases may apply. Contact Kooltronic for information.

LEADS: 12-inch [304.8mm] (minimum) power and ground leads. Special lengths and/or plugs available.

AIRFLOW AND STATIC PRESSURE CONVERSION FACTORS

Multiply airflow in cubic feet per minute (CFM) by:
- 1.7 to obtain airflow in cubic meters per hour (m^3/hr.)
- 0.47 to obtain airflow in liters per second (L/S)

Multiply static pressure in inches of water (in. W.G.) by:
- 25.4 to obtain static pressure in millimeters of water (mm W.G.)
- 249 to obtain static pressure in Pascals (Pa)

SINGLE CENTRIFUGAL BLOWERS



DESCRIPTION

KOOLTRONIC ***Single Centrifugal Blowers*** are designed for performance against low to moderate static pressures. They are available in seven sizes and capacities. Easily installed, they can be mounted in any orientation for maximum cooling efficiency.

These popular blowers are a low cost alternative for a multitude of applications. They are the workhorses of electronics cooling and are widely used in other non-electronic applications.

General specifications common to all KOOLTRONIC Basic Blowers are on the first page of this section.

KOOLTRONIC also designs and manufactures a variety of blowers to meet *unique* specifications. We invite your inquiries about our modification and custom-design capabilities.

CALL 1-800-321-KOOL (5665)
or FAX 609-466-1114

STANDARD FEATURES

- 12-inch [304.8mm] (minimum) power and ground leads
- Accessories and options
- Capacities: 60 to 425 CFM
- Full performance in any mounting position
- Rugged Construction with Baked Powder Finish
- UL/CSA ball bearing motors

ACCESSORIES AND OPTIONS

	Page
■ Airflow Switch	145
■ Automatic Speed Control	147
■ Inlet Finger Guard	✦
■ Other voltages and frequencies	✦
■ Special external paint finishes	✦
■ Special line cord or connectors	✦

✦ Contact KOOLTRONIC for information.

PERFORMANCE GRAPHS

KBB25

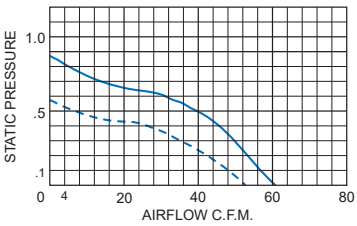

KBB30

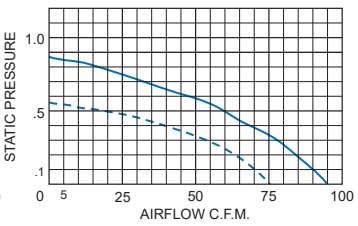

KBB35

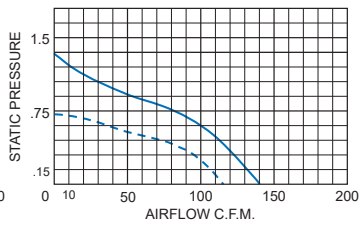

Airflow vs. static pressure curves are shown for 60 Hz (solid line) and 50 Hz (broken line) inputs. Static pressure is in inches of water. For conversion to other units of measurement see page 119.

KBB36

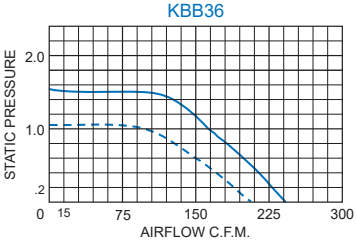

KBB43

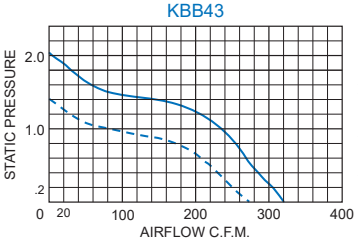

KBB49

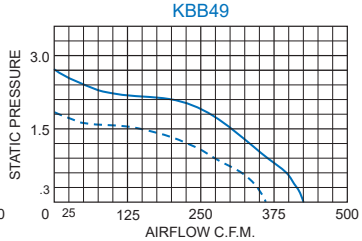

KBB50

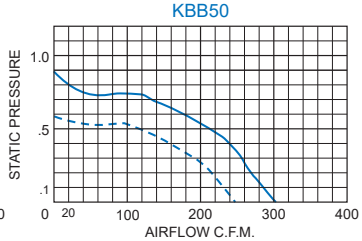

SINGLE CENTRIFUGAL

For assistance in model selection, refer to the Blower & Fan Selection Guides on pages 10 and 142, call KOOLTRONIC, or use one of our FREE design aid software programs.

DIMENSIONS inches [mm]

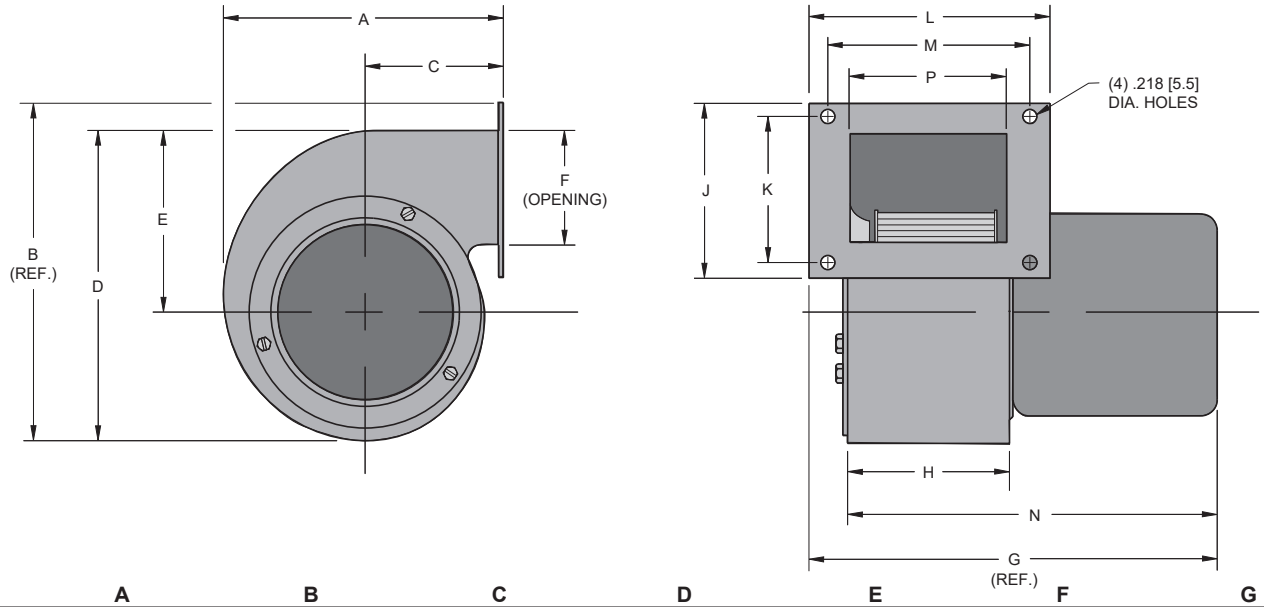

Model	A	B	C	D	E	F	G
KBB25	4.56 [115.8]	5.25 [133.4]	2.25 [57.2]	4.93 [125.2]	2.88 [73.2]	1.83 [46.5]	5.25 [133.4]
KBB30	5.31 [134.9]	6.00 [152.4]	2.56 [65.0]	5.44 [138.2]	3.13 [79.5]	1.88 [47.8]	5.88 [149.4]
KBB35	6.32 [160.5]	7.53 [191.3]	3.00 [76.2]	6.69 [169.9]	3.83 [97.3]	2.41 [61.2]	6.32 [160.5]
KBB36	6.44 [163.6]	7.10 [180.3]	3.21 [81.5]	6.72 [170.7]	3.77 [95.8]	2.41 [61.2]	8.44 [214.4]
KBB43	7.31 [185.7]	8.25 [209.6]	3.44 [87.4]	7.63 [193.8]	4.19 [106.4]	3.31 [84.1]	8.25 [209.6]
KBB49	7.31 [185.7]	8.19 [208.0]	3.44 [87.4]	7.65 [194.3]	4.38 [111.3]	3.25 [82.6]	10.50 [266.7]
KBB50	8.25 [209.6]	9.19 [233.4]	4.06 [103.1]	8.68 [220.5]	5.00 [127.0]	3.11 [79.0]	8.94 [227.1]

Model	H	J	K	L	M	N	P
KBB25	2.00 [50.8]	2.69 [68.3]	2.25 [57.2]	3.06 [77.7]	2.63 [66.8]	4.75 [120.7]	2.00 [50.8]
KBB30	2.50 [63.5]	3.13 [79.5]	2.44 [62.0]	3.75 [95.3]	3.13 [79.5]	5.25 [133.4]	2.44 [62.0]
KBB35	2.56 [65.0]	3.75 [95.3]	3.00 [76.2]	3.75 [95.3]	3.13 [79.5]	5.71 [145.0]	2.44 [62.0]
KBB36	3.44 [87.4]	3.25 [82.6]	2.00 [50.8]	4.63 [117.6]	4.06 [103.1]	8.00 [203.2]	3.38 [85.9]
KBB43	4.00 [101.6]	4.50 [114.3]	3.75 [95.3]	5.13 [130.3]	4.63 [117.6]	7.69 [195.3]	3.88 [98.6]
KBB49	4.25 [108.0]	4.50 [114.3]	3.75 [95.3]	5.63 [143.0]	5.00 [127.0]	9.56 [242.8]	4.06 [103.1]
KBB50	4.31 [109.5]	4.38 [111.3]	3.75 [95.3]	5.50 [139.7]	4.93 [125.2]	8.43 [214.1]	4.19 [106.4]

For motor on opposite side, consult KOOLTRONIC.
Dimensions, inches [mm], are for reference only and subject to change.

TECHNICAL DATA*

Model	Normally In Stock	CFM @ 0" S.P.	Cutoff S.P.	RPM Nominal	Amps Run.	Amps L.R.	Watts	Approximate Weight Lbs.	Approximate Weight Kg.
KBB25	Yes	60	0.85	3300	0.5	0.8	35	5	2.3
KBB30	Yes	95	0.85	3150	0.6	0.8	41	5	2.3
KBB35	Yes	140	1.30	3200	1.3	2.1	90	6	2.7
KBB36	Yes	235	1.50	3275	1.3	3.0	150	7	3.2
KBB43	Yes	320	2.00	3300	1.6	3.1	180	9	4.1
KBB49	Yes	425	2.70	3450	3.3	13.6	335	13	5.9
KBB50		300	0.88	1550	0.9	1.3	95	8	3.6

* 115V, 60 Hz. operation

HOW TO ORDER

Specify model number. For 230 VAC operation, add a 2 after the K. Example: K2BB43. **NOTE:** Some 230 Volt models may not be available or minimum purchases may apply. Contact Kooltronic for information.

HIGH PRESSURE CENTRIFUGAL BLOWERS



DESCRIPTION

High Pressure Centrifugal Blowers fill the performance range between ***Single Centrifugal Blowers*** and ***High Pressure Radial Blowers***. They have been specifically engineered for applications requiring higher airflow against somewhat lower static pressures than ***High Pressure Radial Blowers.***

These high pressure blowers are available in a variety of sizes and output capacities, to satisfy many airflow/static pressure requirements. Representative performance: 120 CFM to 430 CFM at 1" static pressure; 120 CFM to 375 CFM at 2.5" static pressure.

General specifications common to all KOOLTRONIC Basic Blowers are on the first page of this section.

KOOLTRONIC also designs and manufactures a variety of blowers to meet *unique* specifications. We invite your inquiries about our modification and custom-design capabilities.

CALL 1-800-321-KOOL (5665)
or FAX 609-466-1114

STANDARD FEATURES

- 12-inch [304.8mm] (minimum) power and ground leads
- Accessories and options
- Capacities: 160 to 475 CFM
- Designed for mid-range static pressures
- Full performance in any mounting position
- Rugged Construction with Baked Powder Finish
- UL/CSA ball bearing motors

ACCESSORIES AND OPTIONS

	Page
Airflow Switch	145
Automatic Speed Control	147*
Inlet Finger Guard	✦
Other voltages and frequencies	✦
Special external paint finishes	✦
Special line cord or connectors	✦

✦ Contact KOOLTRONIC for information.

* Not an accessory for KBB65.

PERFORMANCE GRAPHS

KBB38

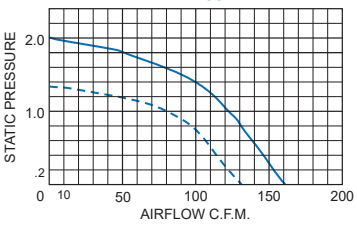

KBB47

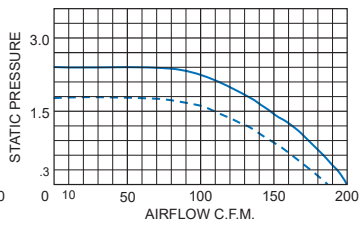

KBB51

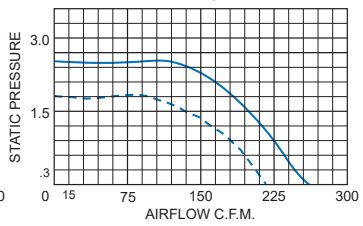

KBB58

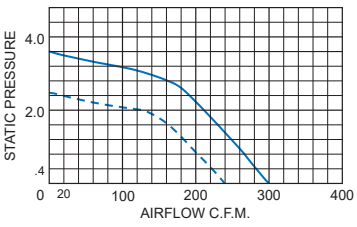

KBB63

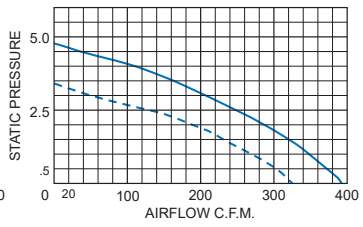

KBB65

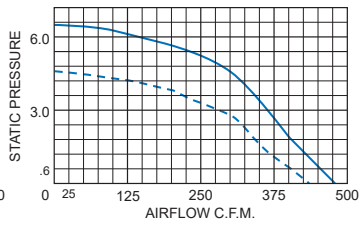

Airflow vs. static pressure curves are shown for 60 Hz (solid line) and 50 Hz (broken line) inputs. Static pressure is in inches of water. For conversion to other units of measurement see page 119.

HIGH PRESSURE CENTRIFUGAL

For assistance in model selection, refer to the Blower & Fan Selection Guides on pages 10 and 142, call KOOLTRONIC, or use one of our FREE design aid software programs.

DIMENSIONS inches [mm]

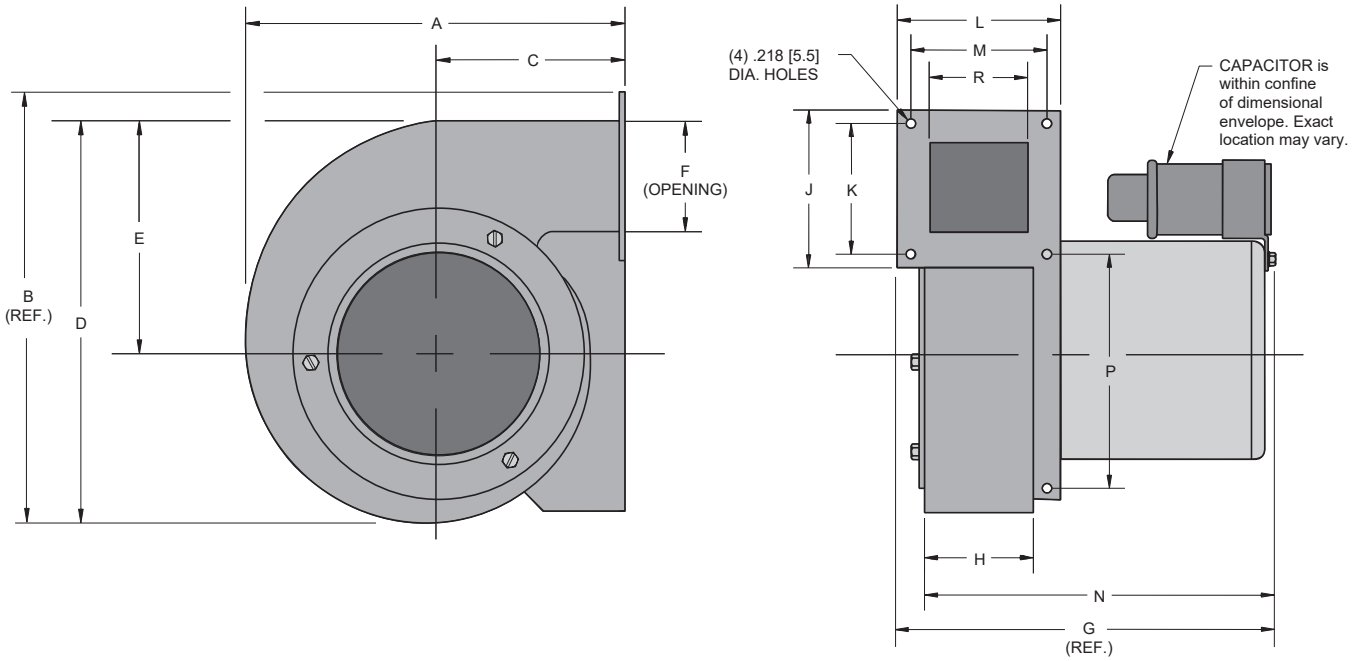

Model	A	B	C	D	E	F	G	H
KBB38	6.43 [163.3]	7.43 [188.7]	3.00 [76.2]	6.81 [173.0]	3.88 [98.6]	2.00 [50.8]	7.50 [190.5]	2.50 [63.5]
KBB47	7.31 [185.7]	8.13 [206.5]	3.53 [89.7]	7.56 [192.0]	4.27 [108.5]	2.31 [58.7]	7.54 [191.5]	2.25 [57.2]
KBB51	8.13 [206.5]	9.25 [235.0]	4.00 [101.6]	8.63 [219.2]	5.00 [127.0]	2.38 [60.5]	8.44 [214.4]	2.50 [63.5]
KBB58	8.56 [217.4]	9.88 [251.0]	4.00 [101.6]	9.25 [235.0]	5.27 [133.9]	2.67 [67.8]	8.63 [219.2]	2.50 [63.5]
KBB63	9.56 [242.8]	11.00 [279.4]	4.19 [106.4]	10.33 [262.4]	5.98 [151.9]	2.67 [67.8]	8.75 [222.3]	2.50 [63.5]
KBB65	9.63 [244.6]	11.31 [287.3]	4.50 [114.3]	10.50 [266.7]	6.06 [153.9]	3.75 [95.3]	9.00 [228.6]	2.75 [69.9]

Model	J	K	L	M	N	P	R
KBB38	3.25 [82.6]	2.63 [66.8]	3.50 [88.9]	2.88 [73.2]	7.00 [177.8]	*	2.38 [60.5]
KBB47	3.63 [92.2]	3.00 [76.2]	3.50 [88.9]	2.88 [73.2]	6.93 [176.0]	*	2.00 [50.8]
KBB51	3.63 [92.2]	3.00 [76.2]	3.75 [95.3]	3.13 [79.5]	7.81 [198.4]	5.38 [136.7]	2.38 [60.5]
KBB58	4.00 [101.6]	3.38 [85.9]	3.75 [95.3]	3.13 [79.5]	7.79 [197.9]	5.75 [146.1]	2.38 [60.5]
KBB63	4.00 [101.6]	3.38 [85.9]	3.75 [95.3]	3.13 [79.5]	8.06 [204.7]	5.75 [146.1]	2.38 [60.5]
KBB65	5.31 [134.9]	4.56 [115.8]	4.25 [108.0]	3.50 [89.0]	8.25 [209.6]	4.56 [115.8]	2.63 [66.8]

*Does not have extended flange.
For motor on opposite side, consult KOOLTRONIC.
Dimensions, inches [mm], are for reference only and subject to change.

TECHNICAL DATA*

Model	Normally In Stock	CFM @ 0" S.P.	Cutoff S.P.	RPM Nominal	Amps Run.	Amps L.R.	Watts	Approximate Weight Lbs.	Approximate Weight Kg.
KBB38		160	1.90	3425	0.9	2.1	100	8	3.6
KBB47	Yes	200	2.10	3000	1.6	2.4	187	8	3.6
KBB51		260	2.60	3500	2.4	13.6	230	13	5.9
KBB58	Yes	300	3.60	3475	2.9	13.6	290	13	5.9
KBB63	Yes	390	4.70	3375	4.6	15.0	290	15	6.8
KBB65	Yes	475	6.30	3000	7.6	15.0	810	16	7.3

* 115V, 60 Hz. operation

HOW TO ORDER

Specify model number. For 230 VAC operation, add a 2 after the K. Example: K2BB63. **NOTE:** Some 230 Volt models may not be available or minimum purchases may apply. Contact Kooltronic for information.

HIGH PRESSURE RADIAL BLOWERS



DESCRIPTION

This series of blowers was specifically designed for maximum efficiency in the movement of moderate volumes of air against substantial static pressures. Applications include cooling computer disk drives, densely-packed enclosures, forcing gas-air mixtures into small boiler combustion chambers, and in chromatography and pollution sampling equipment, to name just a few.

High Pressure Radial Blowers are available in a choice of sizes and capacities, ranging from 40 CFM to 240 CFM at 1" static pressure and up to 150 CFM at 5" static pressure. Consult performance graphs for airflows available at your static pressure requirements.

General specifications common to all KOOLTRONIC Basic Blowers are on the first page of this section.

KOOLTRONIC also designs and manufactures a variety of blowers to meet *unique* specifications. We invite your inquiries about our modification and custom-design capabilities.

CALL 1-800-321-KOOL (5665)
or FAX 609-466-1114

STANDARD FEATURES

- 12-inch [304.8mm] (minimum) power and ground leads
- Accessories and options
- Capacities: 55 to 265 CFM
- Designed for substantial static pressures
- Full performance in any mounting position
- Rugged Construction with Baked Powder Finish
- UL/CSA ball bearing motors

ACCESSORIES AND OPTIONS

	Page
Airflow Switch	145
Automatic Speed Control	147
Inlet Finger Guard	✦
Other voltages and frequencies	✦
Special external paint finishes	✦
Special line cord or connectors	✦

✦ Contact KOOLTRONIC for information.

PERFORMANCE GRAPHS

KBR60

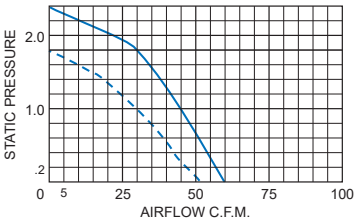

KBR75

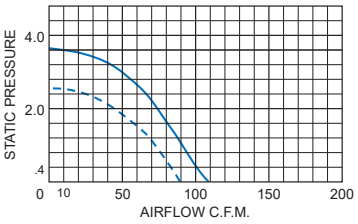

KBR90

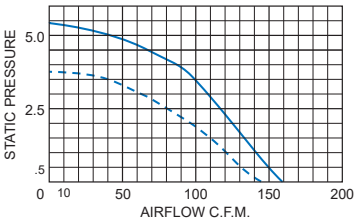

KBR100

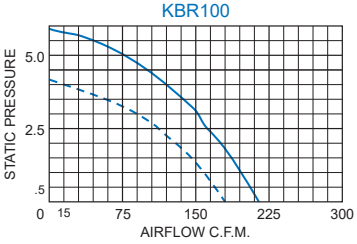

KBR125

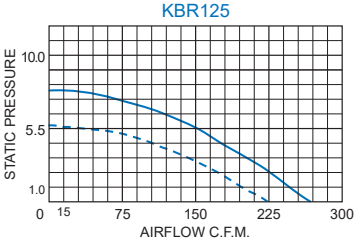

Airflow vs. static pressure curves are shown for 60 Hz (solid line) and 50 Hz (broken line) inputs. Static pressure is in inches of water. For conversion to other units of measurement see page 119.

For assistance in model selection, refer to the Blower & Fan Selection Guides on pages 10 and 142, call KOOLTRONIC, or use one of our FREE design aid software programs.

DIMENSIONS inches [mm]

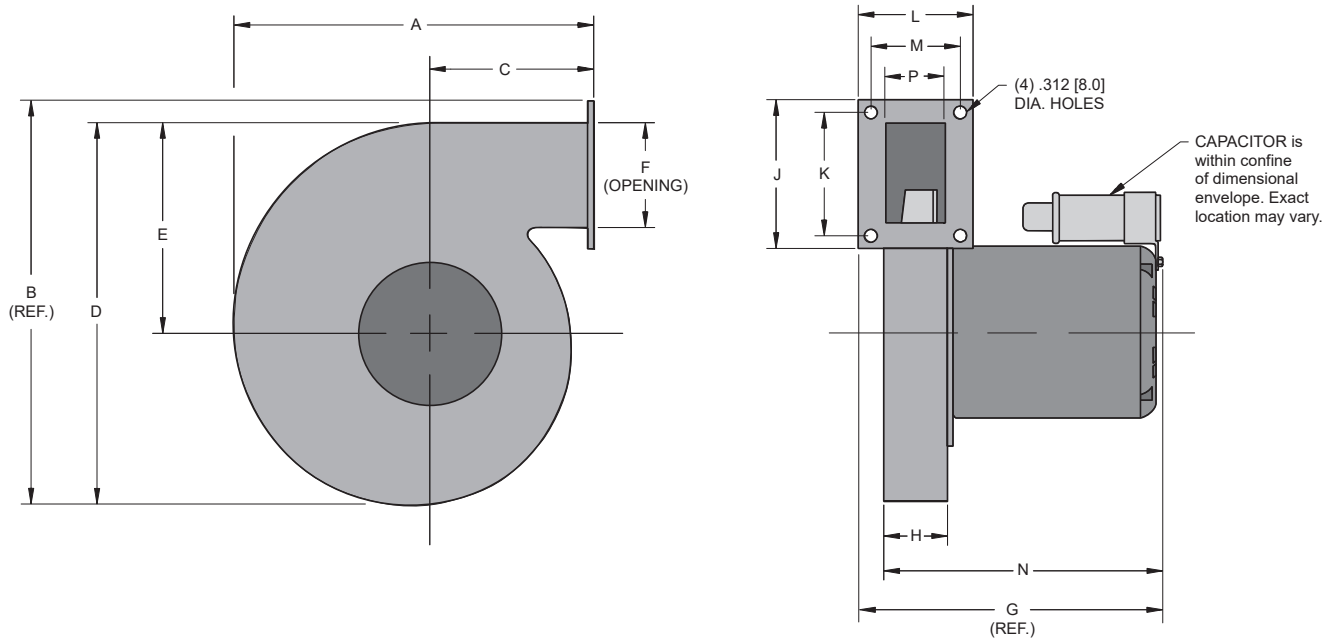

Model	A	B	C	D	E	F	G
KBR60	7.81 [198.4]	9.25 [235.0]	3.81 [96.8]	8.63 [219.2]	4.94 [125.5]	2.06 [52.3]	6.56 [166.6]
KBR75	9.69 [246.1]	11.00 [279.4]	4.50 [114.3]	10.31 [261.9]	5.50 [139.7]	2.50 [63.5]	6.75 [171.5]
KBR90	11.25 [285.8]	12.29 [312.2]	5.69 [144.5]	11.62 [295.1]	6.25 [158.8]	3.13 [79.5]	6.75 [171.5]
KBR100	13.53 [343.7]	13.75 [349.3]	7.43 [188.7]	13.03 [331.0]	7.06 [179.3]	3.94 [100.1]	7.81 [198.4]
KBR125	13.53 [343.7]	13.75 [349.3]	7.43 [188.7]	13.03 [331.0]	7.06 [179.3]	3.94 [100.1]	7.88 [200.2]

Model	H	J	K	L	M	N	P
KBR60	1.31 [33.3]	3.25 [82.6]	2.63 [66.8]	2.50 [63.5]	1.88 [47.8]	5.93 [150.6]	1.19 [30.2]
KBR75	1.50 [38.1]	3.88 [98.6]	3.25 [82.6]	2.88 [73.2]	2.25 [57.2]	6.06 [153.9]	1.38 [35.1]
KBR90	1.63 [41.4]	4.25 [108.0]	3.88 [98.6]	2.88 [73.2]	2.25 [57.2]	6.13 [155.7]	1.50 [38.1]
KBR100	1.50 [38.1]	5.25 [133.4]	4.63 [117.6]	2.88 [73.2]	2.13 [54.1]	7.13 [181.1]	1.38 [35.1]
KBR125	1.50 [38.1]	5.25 [133.4]	4.63 [117.6]	2.88 [73.2]	2.13 [54.1]	7.19 [182.6]	1.38 [35.1]

For motor on opposite side, consult KOOLTRONIC.

Dimensions, inches [mm], are for reference only and subject to change.

TECHNICAL DATA*

Model	Normally In Stock	CFM @ 0" S.P.	Cutoff S.P.	RPM Nominal	Amps Run.	Amps L.R.	Watts	Approximate Weight Lbs.	Approximate Weight Kg.
KBR60		55	2.30	3500	0.8	2.1	91	6	2.7
KBR75		110	3.60	3400	1.0	2.1	106	9	4.1
KBR90	Yes	160	5.60	2900	2.2	3.1	235	11	5.0
KBR100		215	6.00	3450	3.1	8.1	315	15	6.8
KBR125		265	7.00	3450	3.7	7.2	410	19	8.6

Note: Power input is substantially reduced at higher static pressures.

* 115V, 60 Hz. operation

HOW TO ORDER

Specify model number. For 230 VAC operation, add a 2 after the K. Example: K2BR90. **NOTE:** Some 230 Volt models may not be available or minimum purchases may apply. Contact Kooltronic for information.

DOUBLE CENTRIFUGAL BLOWERS

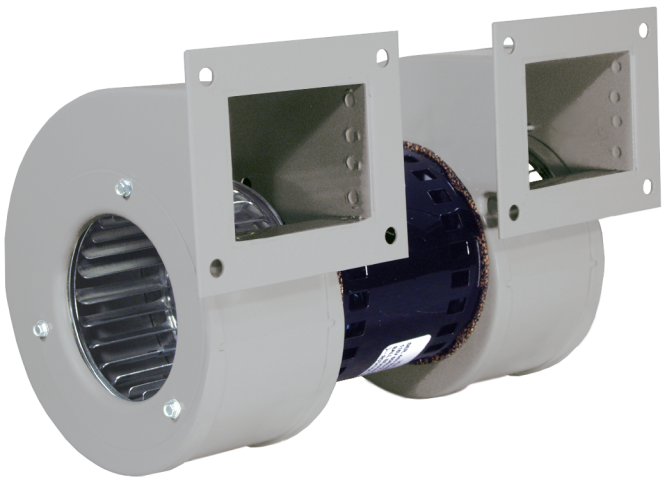

DESCRIPTION

KOOLTRONIC ***Double Centrifugal Blowers*** are designed to provide greater airflow than the related single blower series, in the same types of low to moderate static pressure applications. Similarly, they are easily installed and operate with equal effectiveness in any mounting orientation.

Ten models comprise the series, offering a choice of sizes and capacities to satisfy a wide variety of cooling requirements. Together, single and double centrifugal blowers are the backbone of forced convection air cooling.

These ***Double Centrifugal Blowers*** and the ***Quadruplex Centrifugal Blowers*** are the exclusive air movement components in virtually all KOOLTRONIC Packaged Blowers, Heat Exchangers and Air Conditioners.

General specifications common to all KOOLTRONIC Basic Blowers are on the first page of this section.

KOOLTRONIC also designs and manufactures a variety of blowers to meet *unique* specifications. We invite your inquiries about our modification and custom-design capabilities.

CALL 1-800-321-KOOL (5665)
or FAX 609-466-1114

STANDARD FEATURES

- 12-inch [304.8mm] (minimum) power and ground leads
- Accessories and options
- Capacities: 155 to 1200 CFM
- Full performance in any mounting position
- Rugged Construction with Baked Powder Finish
- UL/CSA ball bearing motors

ACCESSORIES AND OPTIONS

	Page
Airflow Switch	145
Automatic Speed Control	147*
Inlet Finger Guard	✦
Other voltages and frequencies	✦
Special external paint finishes	✦
Special line cord or connectors	✦

✦ Contact KOOLTRONIC for information.

* Not an accessory for KBB80-80.

PERFORMANCE GRAPHS

KBB25-25

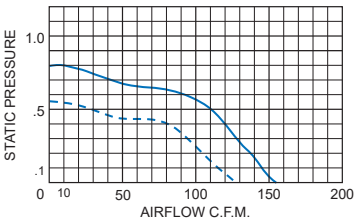

KBB30-30

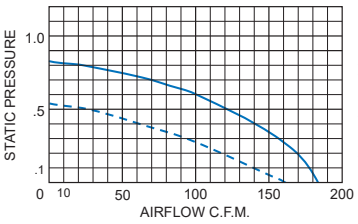

KBB36-36

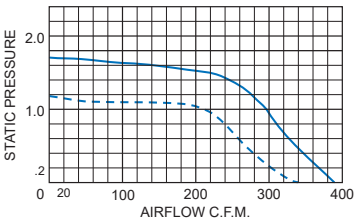

Airflow vs. static pressure curves are shown for 60 Hz (solid line) and 50 Hz (broken line) inputs. Static pressure is in inches of water. For conversion to other units of measurement see page 119.

KBB37-37

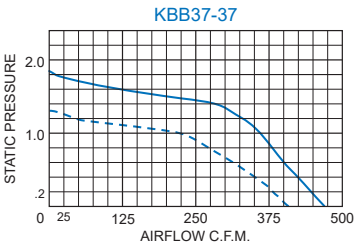

KBB43-43

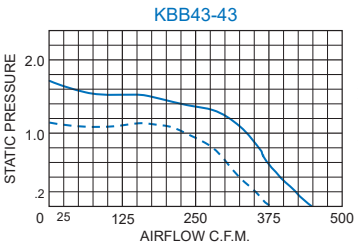

KBB50-50

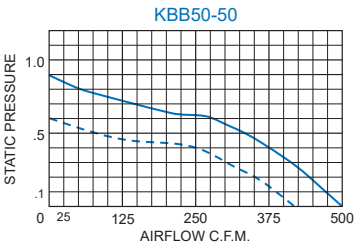

KBB57-57

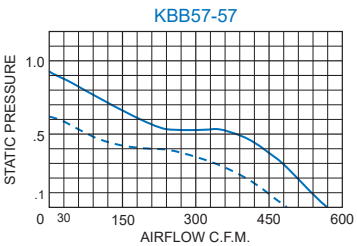

KBB60-60

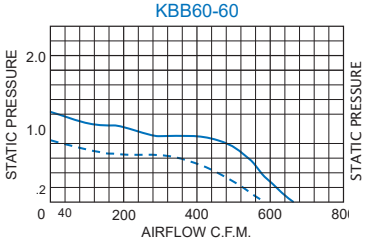

KBB64-64

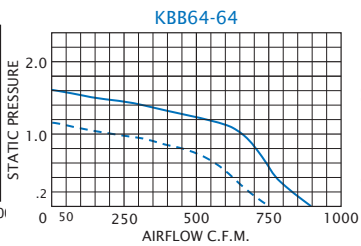

KBB80-80

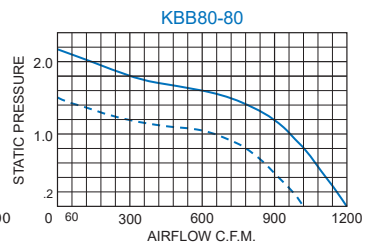

For assistance in model selection, refer to the Blower & Fan Selection Guides on pages 10 and 142, call KOOLTRONIC, or use one of our FREE design aid software programs.

DIMENSIONS inches [mm]

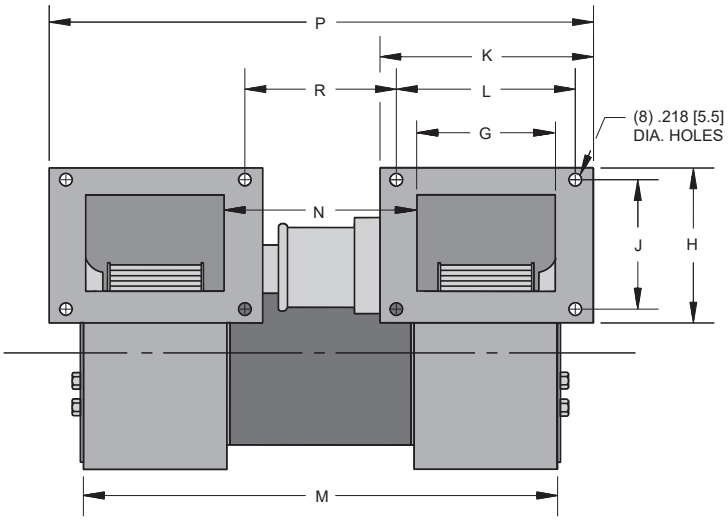

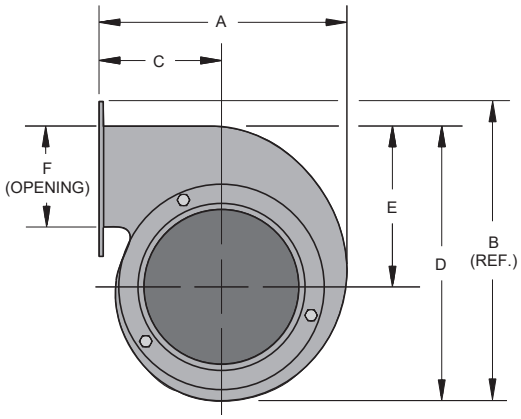

Model	A	B	C	D	E	F	G	H
KBB25-25	4.63 [117.6]	5.25 [133.4]	2.31 [58.7]	4.81 [122.2]	2.88 [73.2]	1.88 [47.8]	2.50 [63.5]	2.69 [68.3]
KBB30-30	5.28 [134.1]	5.43 [138.0]	2.60 [66.0]	- -	3.09 [78.5]	2.01 [51.0]	- -	3.12 [79.2]
KBB36-36▲	6.44 [163.6]	7.19 [182.6]	3.19 [81.0]	6.81 [173.0]	3.81 [96.8]	2.50 [63.5]	3.37 [85.6]	3.25 [82.6]
KBB37-37▲	6.44 [163.6]	7.19 [182.6]	3.19 [81.0]	6.81 [173.0]	3.81 [96.8]	2.50 [63.5]	4.06 [103.1]	3.25 [82.6]
KBB43-43▲	7.25 [184.2]	8.25 [209.6]	3.50 [88.9]	7.63 [193.8]	4.31 [109.5]	3.25 [82.6]	3.25 [82.6]	4.63 [117.6]
KBB50-50	8.16 [207.4]	9.16 [232.5]	4.00 [101.6]	8.54 [217.0]	4.95 [125.6]	3.21 [81.5]	4.26 [108.1]	4.38 [111.1]
KBB57-57	8.44 [214.4]	9.75 [247.7]	3.75 [95.3]	9.25 [235.0]	5.38 [136.7]	3.68 [93.5]	4.50 [114.3]	4.63 [117.6]
KBB60-60	9.25 [235.0]	11.06 [280.9]	3.81 [96.8]	10.50 [266.7]	6.00 [152.4]	4.25 [108.0]	3.50 [88.9]	5.38 [136.7]
KBB64-64▲	10.63 [270.0]	11.38 [289.1]	5.06 [128.5]	11.00 [279.4]	6.19 [157.2]	4.25 [108.0]	3.75 [95.3]	5.06 [128.5]
KBB80-80▲	12.06 [306.3]	- -	5.44 [138.2]	13.25 [336.5]	7.60 [193.0]	5.63 [143.0]	- -	5.94 [150.9]

Model	J	K	L	M	N	P	R
KBB25-25	2.25 [57.2]	3.75 [95.3]	3.13 [79.5]	8.37 [212.6]	3.87 [98.3]	9.62 [244.3]	2.75 [69.9]
KBB30-30	2.44 [62.0]	3.75 [95.3]	3.13 [79.2]	8.35 [212.0]	- -	9.55 [242.6]	2.68 68.0]
KBB36-36▲	2.00 [50.8]	4.63 [117.6]	4.06 [103.1]	10.81 [274.6]	4.13 [104.9]	12.00 [304.8]	3.31 [84.1]
KBB37-37▲	2.50 [63.5]	5.50 [139.7]	5.00 [127.0]	12.25 [311.2]	4.00 [101.6]	13.63 [346.2]	3.06 [77.7]
KBB43-43▲	4.00 [101.6]	4.38 [111.3]	3.88 [98.6]	10.69 [271.5]	4.00 [101.6]	11.70 [297.2]	3.44 [87.4]
KBB50-50	3.75 [95.3]	5.50 [139.7]	4.88 [123.8]	12.51 [317.8]	3.96 [100.5]	13.71 [348.3]	3.34 [84.7]
KBB57-57	4.13 [104.9]	5.50 [139.7]	5.00 [127.0]	12.93 [328.4]	4.00 [101.6]	13.88 [352.6]	3.38 [85.9]
KBB60-60	4.88 [123.9]	4.63 [117.6]	4.13 [104.9]	11.00 [279.4]	3.88 [98.6]	12.00 [304.8]	3.25 [82.6]
KBB64-64▲	4.56 [115.8]	5.00 [127.0]	4.50 [114.3]	12.81 [325.4]	5.00 [127.0]	14.00 [355.6]	4.43 [112.5]
KBB80-80▲	5.44 [138.2]	5.00 [127.0]	4.50 [114.3]	12.62 [320.5]	- -	13.75 [348.3]	- -

Dimensions, inches [mm], are for reference only and subject to change.

TECHNICAL DATA*

Model	Normally In Stock	CFM @ 0" S.P.	Cutoff S.P.	RPM Nominal	Amps Run.	Amps L.R.	Watts	Approximate Weight Lbs.	Approximate Weight Kg.
KBB25-25		155	0.80	3300	1.3	2.1	85	7	3.2
KBB30-30	Yes	185	0.80	3250	1.4	2.1	90	7	3.2
KBB36-36		390	1.65	3250	2.3	5.4	240	12	5.5
KBB37-37		465	1.80	3150	2.7	5.4	280	12	5.5
KBB43-43		450	1.70	3200	2.5	5.4	260	13	5.9
KBB50-50	Yes	500	0.90	1700	1.5	4.7	150	15	6.8
KBB57-57		560	0.90	1650	1.6	4.7	160	16	7.3
KBB60-60	Yes	665	1.20	1575	2.3	4.7	235	18	8.2
KBB64-64▲		890	1.60	1700	4.6	17.5	430	25	11.4
KBB80-80▲	Yes	1200	2.15	1650	6.6	17.5	650	26	11.8

* 115V, 60 Hz. operation

HOW TO ORDER

Specify model number. For 230 VAC operation, add a 2 after the K. Example: K2BB25-25. ▲**NOTE:** Some models (KBB64-64, 80-80, 36-36, 43-43, 37-37) unavailable in 230 VAC or minimum purchases may apply. Contact Kooltronic for availability of 230 VAC models.

QUADRUPLEX CENTRIFUGAL BLOWERS

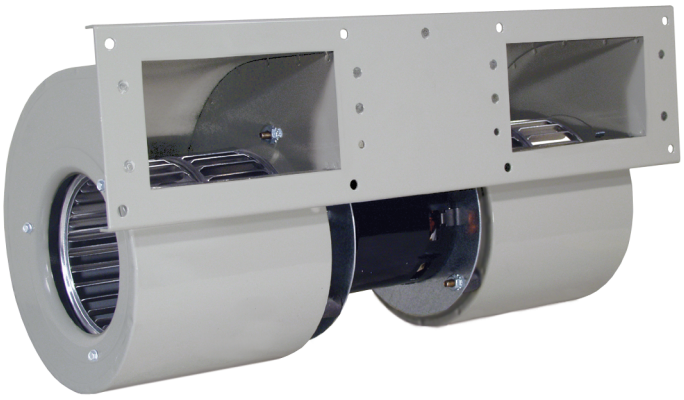

DESCRIPTION

KOOLTRONIC ***Quadruplex Centrifugal Blowers*** move more air with less noise and greater efficiency than comparably sized double centrifugal blowers. The optimum wheel width-to-diameter ratio and the specially designed housings, which minimize inlet losses, also contribute to an exceptionally even distribution of airflow for maximum cooling.

A unique motor mount design isolates the drive motor and rotating components from the blower structure for smooth, quiet operation with minimum vibration. ***Quadruplex Blowers*** are suitable wherever wide-band air movement is required and are especially useful for applications such as cooling printed circuit cards and other components in densely packed electronics cabinets.

General specifications common to all KOOLTRONIC Basic Blowers are on the first page of this section.

KOOLTRONIC also designs and manufactures a variety of blowers to meet *unique* specifications. We invite your inquiries about our modification and custom-design capabilities.

CALL 1-800-321-KOOL (5665)
or FAX 609-466-1114

FEATURES

- 12-inch [304.8mm] (minimum) power and ground leads
- Accessories and options
- Capacities: 320 to 920 CFM
- Extremely quiet, efficient operation
- Full performance in any mounting position
- Rugged Construction with Baked Powder Finish
- UL/CSA ball bearing motors

ACCESSORIES AND OPTIONS

	Page
■ Airflow Switch	145
■ Automatic Speed Control	147
■ Inlet Finger Guard	✦
■ Other voltages and frequencies	✦
■ Special external paint finishes	✦
■ Special line cord or connectors	✦

✦ Contact KOOLTRONIC for information.

PERFORMANCE GRAPHS

KBB430

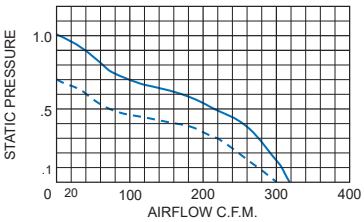

KBB435

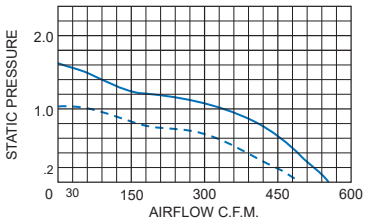

KBB443

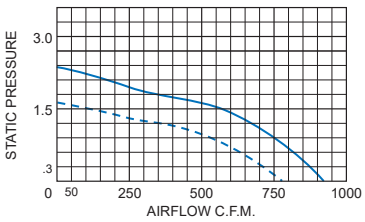

KBB451

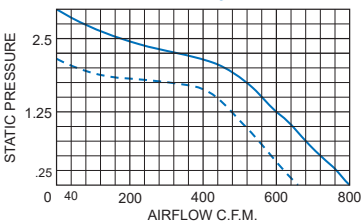

Airflow vs. static pressure curves are shown for 60 Hz (solid line) and 50 Hz (broken line) inputs. Static pressure is in inches of water. For conversion to other units of measurement see page 119.

QUADRUPLEX CENTRIFUGAL

For assistance in model selection, refer to the Blower & Fan Selection Guides on pages 10 and 142, call KOOLTRONIC, or use one of our FREE design aid software programs.

DIMENSIONS inches [mm]

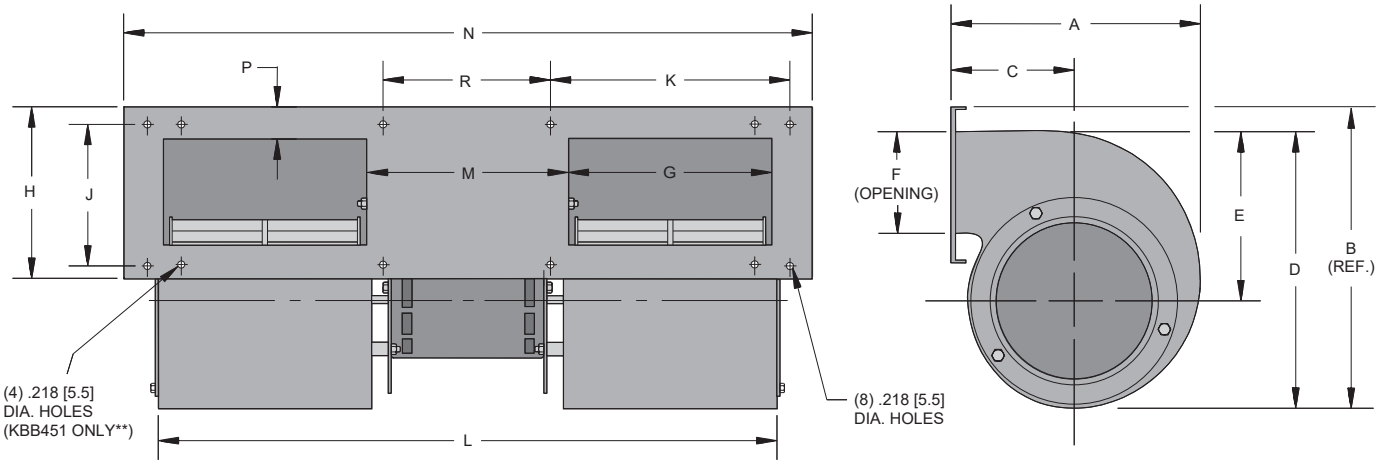

Model	A	B	C	D	E	F	G	H
KBB430	5.00 [127.0]	6.25 [158.8]	2.19 [55.6]	5.50 [139.7]	3.13 [79.5]	2.06 [52.3]	4.50 [114.3]	4.00 [101.6]
KBB435	6.39 [162.3]	----- -----	3.08 [78.2]	----- -----	3.82 [97.0]	----- -----	4.65 [118.1]	3.88 [98.5]
KBB443*	7.43 [188.7]	7.94 [201.7]	3.50 [88.9]	7.63 [193.8]	4.38 [111.3]	3.25 [82.6]	4.75 [120.7]	6.75 [171.5]
KBB451	8.31 [211.1]	9.31 [236.5]	4.25 [108.0]	8.63 [219.2]	5.00 [127.0]	3.25 [82.6]	3.25 [82.6]	4.63 [117.6]

Model	J	K	L	M	N	P	R
KBB430	2.78 [70.6]	5.25 [133.4]	13.44 [341.4]	4.44 [112.8]	14.94 [379.5]	0.75 [19.1]	3.81 [96.8]
KBB435	3.12 [79.2]	5.50 [139.7]	14.19 [360.4]	4.79 [120.6]	16.00 [406.4]	----- -----	4.38 [111.3]
KBB443*	6.00 [152.4]	5.38 [136.7]	15.88 [403.4]	6.25 [158.8]	17.00 [431.8]	0.38 [9.7]	5.63 [143.0]
KBB451	3.91 [99.3]	4.00 [101.6]	13.50 [342.9]	7.00 [177.8]	14.88 [378.0]	0.69 [17.5]	6.25 [158.8]

Dimensions, inches [mm], are for reference only and subject to change.

* Diagram does not depict oversized mounting plate on this model.

** KBB451 has four additional mounting holes.

TECHNICAL DATA*

Model	Normally In Stock	CFM @ 0" S.P.	Cutoff S.P.	RPM Nominal	Amps Run.	Amps L.R.	Watts	Approximate Weight Lbs.	Approximate Weight Kg.
KBB430		320	1.00	2900	1.8	2.5	140	9	4.1
KBB435	Yes	550	1.60	3150	2.0	3.1	220	11	5.0
KBB443	Yes	920	2.30	3350	5.6	18.1	630	22	10.0
KBB451	Yes	800	3.00	3350	5.6	18.1	630	22	10.0

* 115V, 60 Hz. operation

HOW TO ORDER

Specify model number. For 230 VAC operation, add a 2 after the K. Example: K2BB451. ▲**NOTE:** Some models unavailable in 230 VAC or minimum purchases may apply. Contact Kooltronic for availability of 230 VAC models.



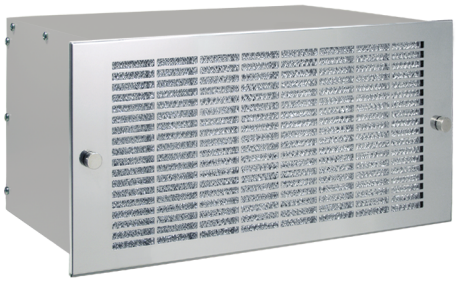

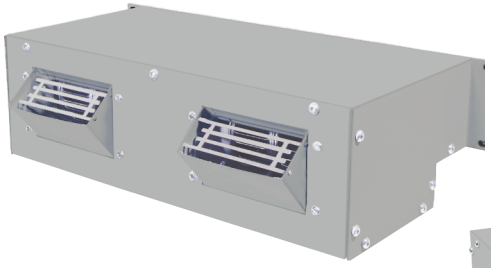



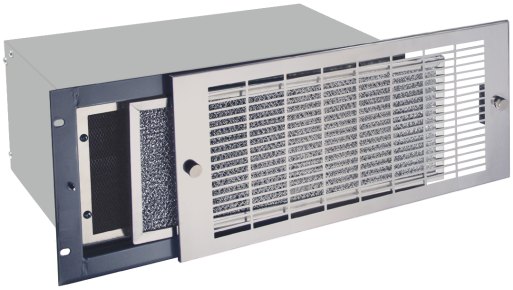

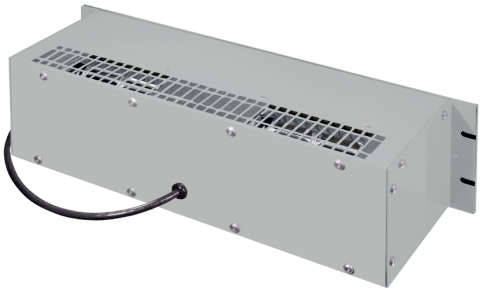

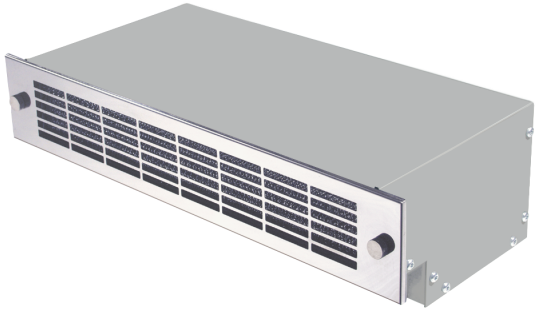





PACKAGED BLOWERS

KOOLTRONIC Packaged Blowers are used in semi-clean environments for equipment that can operate at temperatures above ambient and against moderate static pressures while providing adequate filtration. Each combines a specially-designed double-inlet blower in a sturdy cabinet, with a filter and grille.

Packaged Standard Twin Blowers, Recessed Twin Blowers, EMI/RFI-Shielded Twin Blowers and ***Broad Discharge Twin Blowers*** comprise one of the most extensive and versatile standard product lines available. When combined with selections from the complete array of accessories and options, these blowers can provide the solution to virtually every application requiring a packaged unit utilizing ambient air for cooling.

Each packaged blower is engineered for performance and built for reliability. All applicable components are UL/CSA Recognized.

Popular blowers are stocked and ready to ship. Emergency shipment service is available.

KOOLTRONIC also designs and manufactures a variety of packaged blowers to meet unique specifications. We invite your inquiries about our modification and custom-design capabilities.

GENERAL SPECIFICATIONS FOR ALL PACKAGED BLOWERS

RUGGED CONSTRUCTION: Precision-engineered heavy-gauge steel construction ensures blower will stand up under tough industrial applications. EIA-notched flanges extend 17-inch [431.8mm] blower cabinet to 19-inch [482.6mm] panel width.

BAKED POWDER FINISH: Durable, baked-on powder finish is standard. Other finishes are available.

PRECISION BALL-BEARING MOTORS: All motors, whether permanent split capacitor or shaded pole, are UL/CSA Recognized, and include automatic-reset thermal overload protection. Designed for low temperature rise, KOOLTRONIC motors are also cooled by the blowers' intake air, for maximum motor life. All motors are UL Recognized and carry a Declaration of Conformity to applicable CE Standards. Special permanent lubricants perform over a broad temperature range: -20ºF (-29ºC) to 250ºF (121ºC). Consult KOOLTRONIC for motors designed to meet military or extreme environmental specifications.

POWER: 115 VAC or 230 VAC, 50/60 Hz is standard. ▲**NOTE:** Some models unavailable in 230 VAC or minimum purchases may apply. Contact Kooltronic for availability of 230 VAC models. For multi-phase power, other voltages and frequencies or brushless DC applications, consult KOOLTRONIC.

GRILLE: All units include attractive 19-inch [482.6mm] wide stainless steel grilles with knurled captive fasteners for easy removal. Grille area is 65% open and complies with OSHA and UL safety standards.

FILTERS: Multi-layer grid of sturdy, corrugated aluminum in an aluminum frame. May be reused after washing off accumulations and spraying with KOOLTRONIC A-16 Recoating Adhesive. Filters must be kept free of accumulations to prevent reduction or loss of performance and/or damage to equipment.

POWER CORD: All 115 VAC, 50/60 Hz units are supplied with a minimum of 3-foot [0.9m] three-wire cord with molded plug included, internally grounded and securely locked to the case by a strain relief bushing. 230 VAC, 50/60 Hz blowers are supplied without a plug. Special lengths and/or plugs are available.

EXHAUST GUARDS: Included on all packaged blowers.

AIRFLOW AND STATIC PRESSURE CONVERSION FACTORS

Multiply airflow in cubic feet per minute (CFM) by:
- 1.7 to obtain airflow in cubic meters per hour (m^3/hr.)
- 0.47 to obtain airflow in liters per second (L/S)

Multiply static pressure in inches of water (in. W.G.) by:
- 25.4 to obtain static pressure in millimeters of water (mm W.G.)
- 249 to obtain static pressure in Pascals (Pa)

STANDARD TWIN PACKAGED BLOWERS



DESCRIPTION

Standard Twin Packaged Blowers are the most popular KOOLTRONIC Packaged Blower. These blowers achieve exceptional performance through use of the largest possible blower housings and wheels. Each contains a quadruplex centrifugal blower powered by a single precision ball-bearing motor, except for the KP350, which contains a twin blower design powered by two precision ball-bearing motors.

These widely-used ***Standard Twin Packaged Blowers*** deliver air from more than 50% of their 17-inch [431.8mm] width, while conventional blowers deliver air from only about 30%. Internal neoprene isolation mounts reduce transmission of vibration and AC hum to the enclosure. Long service life and trouble-free performance are assured through the use of precision ball-bearing motors in all models and by the dual inlet quadruplex design, which uses intake air to cool the motor.

General specifications common to all KOOLTRONIC Packaged Blowers are on the first page of this section.

KOOLTRONIC also designs and manufactures a variety of packaged blowers to meet *unique* specifications. We invite your inquiries about our modification and custom-design capabilities.

CALL 1-800-321-KOOL (5665)
or FAX 609-466-1114

STANDARD FEATURES

- Attractive 19-inch [482.6mm] Stainless Steel Grilles
- Capacities: 160 to 800 CFM
- Dual inlet quadruplex blower design for maximum airflow*
- Exhaust guards included
- Filter
- Heavy-gauge Steel Shell with EIA-notched flanges and Baked Powder Finish
- Inlet air cools motor for longer life
- Three foot [0.9m] (minimum) 3-wire power cord
- UL/CSA ball-bearing motors

* Except the KP350, which contains a twin blower design powered by two precision ball-bearing motors.

ACCESSORIES AND OPTIONS

	Page
Adapters	145
Airflow Switch	145
Automatic Speed Control	147
EMI/RFI Shielding	146
Filter Recoating Adhesive	146
Other voltages and frequencies	✦
Replacement Filters	146
Replacement Grille Assemblies	146
Special external paint finishes	✦
Special line cord or connectors	✦

✦ Contact KOOLTRONIC for information.

PERFORMANCE GRAPHS

KP350

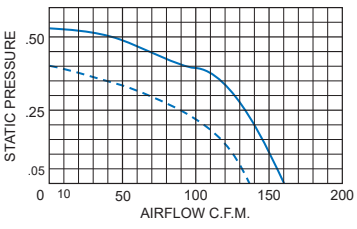

KP528

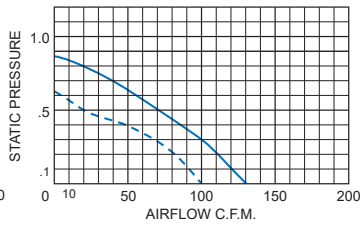

KP529

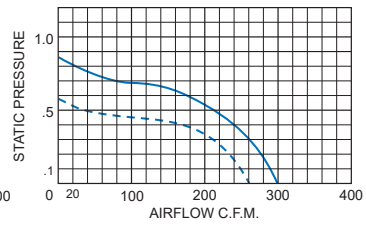

Airflow vs. static pressure curves are shown for 60 Hz (solid line) and 50 Hz (broken line) inputs. Static pressure is in inches of water. For conversion to other units of measurement see page 131.

KP701

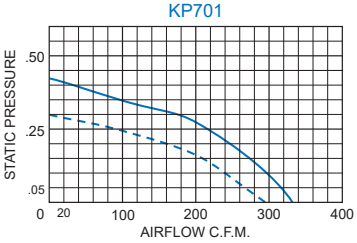

KP729

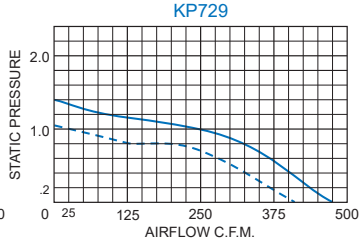

KP877

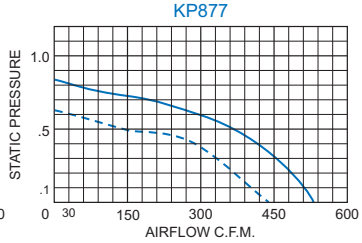

KP1051

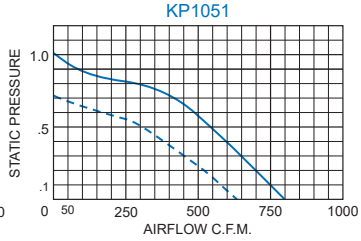

For assistance in model selection, refer to the Blower & Fan Selection Guides on pages 10 and 142, call KOOLTRONIC, or use one of our FREE design aid software programs.

DIMENSIONS AND DISCHARGE LOCATIONS

ALL OTHER MODELS

KP350A

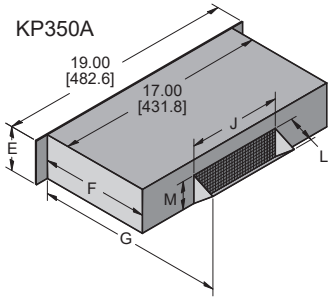

A Discharge

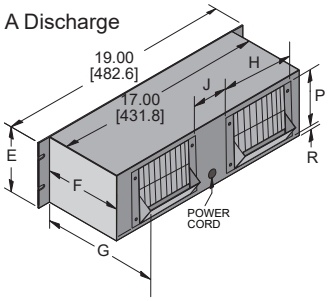

B Discharge

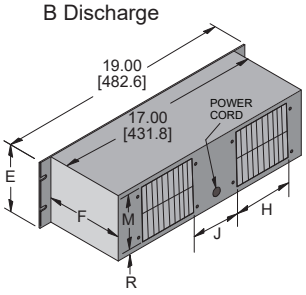

KP350B

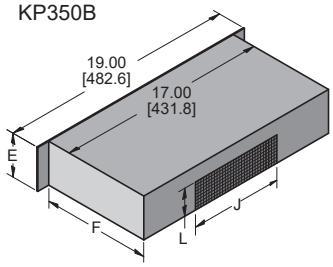

C Discharge

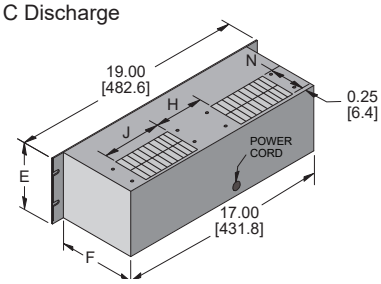

D Discharge

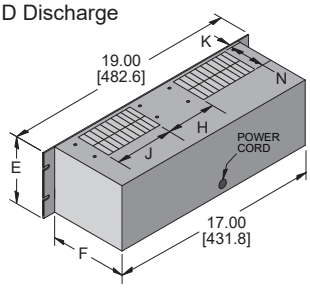

Model	Discharge Available	Max. Panel Height E	F	G	H	J	K
KP350[s]	A B	3.50 [88.9]	8.75 [222.3]	10.50 [266.7]	—	7.50 [190.5]	—
KP528	A B C D	5.25 [133.4]	6.25 [158.8]	7.67 [195.0]	4.62 [117.4]	4.38 [111.3]	0.62 [16.0]
KP529	A B C D	5.25 [133.4]	6.25 [158.8]	7.69 [195.3]	4.50 [114.2]	4.56 [115.8]	0.62 [16.0]
KP701	A B C D	7.00 [177.8]	8.25 [209.6]	10.11 [257.0]	3.13 [79.0]	4.77 [121.0]	0.62 [16.0]
KP729	A B C D	7.00 [177.8]	8.25 [209.6]	10.13 [257.4]	4.44 [112.8]	4.88 [124.0]	1.00 [25.4]
KP877[s]	A B C D	8.75 [222.3]	10.00 [254.0]	11.74 [298.0]	2.13 [54.1]	6.09 [155.0]	0.75 [19.0]
KP1051**	A B C D	10.50 [266.7]	11.50 [292.1]	13.16 [334.0]	4.06 [103.0]	4.42 [112.0]	1.05 [27.0]

** Rev. A

Model	Discharge Available	L	M	N	P	R
KP350[s]	A B	2.25 [57.2]	2.25 [57.2]	—	—	—
KP528	A B C D	1.88 [47.8]	3.00 [76.2]	1.94 [49.3]	3.00 [76.2]	1.19 [30.2]
KP529	A B C D	1.42 [36.0]	3.00 [76.2]	1.94 [49.3]	3.00 [76.2]	1.19 [30.2]
KP701	A B C D	1.86 [47.0]	5.44 [138.2]	3.22 [82.0]	5.44 [138.2]	0.89 [23.0]
KP729	A B C D	—	4.00 [101.6]	2.50 [63.5]	3.54 [101.6]	—
KP877[s]	A B C D	1.74 [44.0]	6.09 [254.0]	3.63 [92.2]	6.06 [153.9]	1.23 [31.0]
KP1051**	A B C D	1.66 [42.0]	7.31 [186.0]	4.18 [106.0]	7.44 [189.0]	1.78 [45.0]

Dimensions, inches [mm], are for reference only and subject to change.

** Rev. A

TECHNICAL DATA*

Model	Normally In Stock	CFM @ 0" S.P.	Cutoff S.P.	RPM Nominal	Amps Run.	Amps L.R.	Watts	Approximate Weight Lbs.	Approximate Weight Kg.
KP350[s]	Yes	160	0.52	1500	1.2	1.6	90	18	8.2
KP528		130	0.87	3150	0.8	1.3	65	13	5.9
KP529	Yes	300	0.87	3000	1.9	2.9	105	13	5.9
KP701	Yes	330	0.42	1600	1.1	1.6	85	18	8.2
KP729	Yes	470	1.40	3250	1.7	3.1	185	18	8.2
KP877[s]	Yes	525	0.82	1500	1.3	1.9	140	28	12.7
KP1051**		800	1.00	1500	2.6	4.9	257	35	15.9

*115V, 60 Hz. operation

** Rev. A

HOW TO ORDER

Specify model number, adding discharge suffix A, B, C or D. Example: KP701A. For 230 VAC operation, add a 2 after the K. Example: K2P701A.
[s]**NOTE:** KP877 and KP350 models unavailable in 230 VAC. Contact Kooltronic for availability of 230 VAC models.

STANDARD TWIN

RECESSED TWIN PACKAGED BLOWERS



DESCRIPTION

Where panel space is a critical element in the design and packaging of an electronics system, KOOLTRONIC ***Recessed Twin Packaged Blowers*** provide maximum air delivery using a minimum of panel height. Extending into the often wasted space in the base of the cabinet below the panel mounting area, these recessed units save a full 1¾-inch [44.5mm] of panel height. There is no loss of airflow because the size of the open grille design still provides sufficient area to meet air delivery requirements.

The ***Recessed Twin Packaged Blowers*** utilize the same powerful quadruplex blowers featured in ***Standard Twin Packaged Blowers***. They provide the same excellent performance and service-life characteristics.

General specifications common to all KOOLTRONIC Packaged Blowers are on the first page of this section.

KOOLTRONIC also designs and manufactures a variety of packaged blowers to meet *unique* specifications. We invite your inquiries about our modification and custom-design capabilities.

CALL 1-800-321-KOOL (5665)
or FAX 609-466-1114

STANDARD FEATURES

- Attractive 19-inch [482.6mm] Stainless Steel Grilles
- Capacities: 130 to 800 CFM
- Dual inlet quadruplex blower design for maximum airflow
- Exhaust guards included
- Filter
- Full air delivery, minimum panel height
- Heavy-gauge Steel Shell with EIA-notched flanges and Baked Powder Finish
- Inlet air cools motor for longer life
- Three foot [0.9m] (minimum) 3-wire power cord
- UL/CSA ball-bearing motors

ACCESSORIES AND OPTIONS

	Page
Adapters	145
Airflow Switch	145
Automatic Speed Control	147
EMI/RFI Shielding	146
Filter Recoating Adhesive	146
Other voltages and frequencies	✦
Replacement Filters	146
Replacement Grille Assemblies	146
Special external paint finishes	✦
Special line cord or connectors	✦

✦ Contact KOOLTRONIC for information.

PERFORMANCE GRAPHS

KPL528

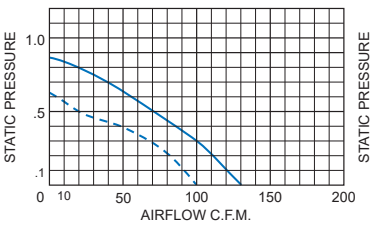

KPL529

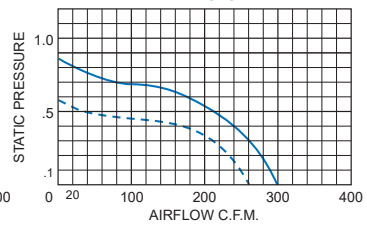

KPL701

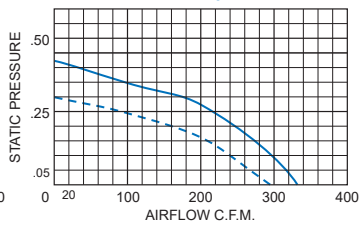

KPL729

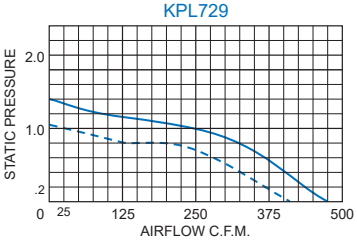

KPL877

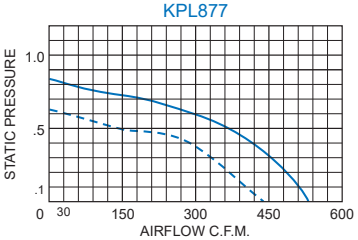

KPL1051

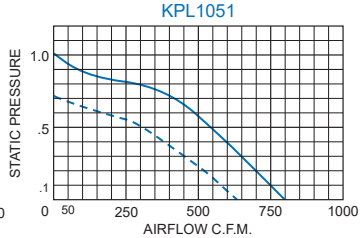

Airflow vs. static pressure curves are shown for 60 Hz (solid line) and 50 Hz (broken line) inputs. Static pressure is in inches of water. For conversion to other units of measurement see page 131.

RECESSED TWIN

For assistance in model selection, refer to the Blower & Fan Selection Guides on pages 10 and 142, call KOOLTRONIC, or use one of our FREE design aid software programs.

DIMENSIONS AND DISCHARGE LOCATIONS

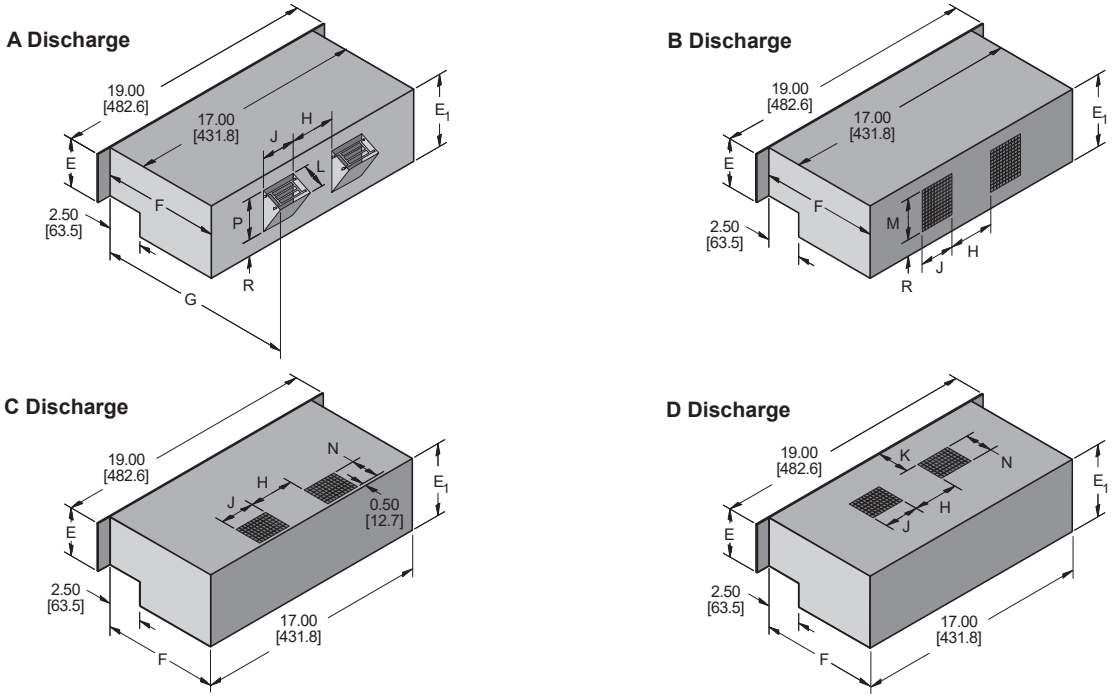

Model	Discharge Available	Max. Panel Height E		E_1		F		G		H		J	
KPL528	A B C D	3.50	[88.9]	5.25	[133.4]	8.50	[215.9]	9.94	[252.5]	3.25	[82.6]	2.50	[63.5]
KPL529	A B C D	3.50	[88.9]	5.25	[133.4]	8.50	[215.9]	9.94	[252.5]	4.50	[114.3]	4.50	[114.3]
KPL701	A B C D	5.25	[133.4]	7.00	[177.8]	10.50	[266.7]	12.31	[312.7]	3.25	[82.6]	4.75	[120.7]
KPL729	A B C D	5.25	[133.4]	7.00	[177.8]	10.50	[266.7]	12.50	[317.5]	4.44	[112.8]	4.88	[124.0]
KPL877▲	A B C D	7.00	[177.8]	8.75	[222.3]	12.50	[317.5]	14.06	[357.1]	2.13	[54.1]	5.94	[150.9]
KPL1051	A B C D	8.75	[222.3]	10.50	[266.7]	12.75	[323.9]	14.38	[365.3]	4.00	[101.6]	4.56	[115.8]

Model	Discharge Available	K		L		M		N		P		R	
KPL528	A B C D	2.38	[60.5]	1.88	[47.8]	3.00	[76.2]	1.94	[49.3]	3.00	[76.2]	1.19	[30.2]
KPL529	A B C D	2.38	[60.5]	1.88	[47.8]	3.00	[76.2]	1.94	[49.3]	3.00	[76.2]	1.19	[30.2]
KPL701	A B C D	1.94	[49.3]	3.50	[88.9]	5.50	[139.7]	3.31	[84.1]	5.50	[139.7]	0.88	[22.4]
KPL729	A B C D	1.94	[49.3]	2.50	[63.5]	4.00	[101.6]	2.50	[63.5]	4.00	[101.6]	1.44	[36.6]
KPL877▲	A B C D	1.75	[44.5]	4.19	[106.4]	6.13	[155.7]	3.63	[92.2]	6.13	[155.7]	1.25	[31.8]
KPL1051	A B C D	1.50	[38.1]	5.38	[136.7]	7.44	[189.0]	4.19	[106.4]	7.44	[189.0]	1.81	[46.0]

Dimensions, inches [mm], are for reference only and subject to change.

TECHNICAL DATA*

Model	Normally In Stock	CFM @ 0" S.P.	Cutoff S.P.	RPM Nominal	Amps Run.	Amps L.R.	Watts	Approximate Weight Lbs.	Approximate Weight Kg.
KPL528		130	0.87	3150	0.8	1.3	65	14	6.4
KPL529		300	0.87	3000	1.4	1.9	95	15	6.8
KPL701		330	0.42	1600	1.1	1.6	85	19	8.6
KPL729		470	1.40	3250	1.7	3.1	185	21	9.5
KPL877▲		525	0.82	1500	1.3	1.9	140	30	13.6
KPL1051		800	1.00	1500	2.5	5.1	260	37	16.8

*115V, 60 Hz. operation

HOW TO ORDER

Specify model number, adding discharge suffix A, B, C or D. Example: KPL529B. For 230 VAC operation, add a 2 after the K. Example: K2PL529B.
▲**NOTE:** KPL877 models unavailable in 230 VAC. Contact Kooltronic for availability of 230 VAC models.

RECESSED TWIN

EMI/RFI SHIELDED TWIN PACKAGED BLOWERS

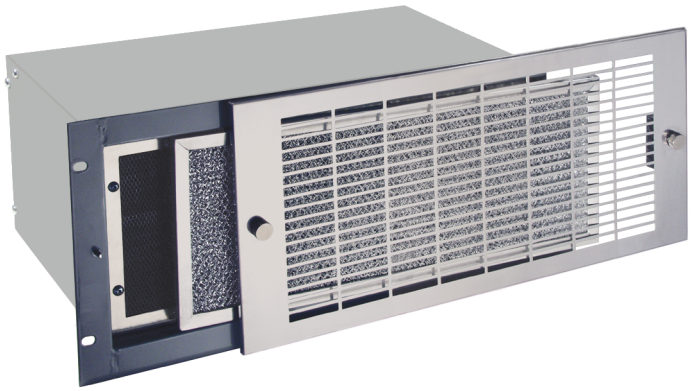

STANDARD FEATURES

- Attractive 19-inch [482.6mm] Stainless Steel Grilles
- Capacities: 130 to 800 CFM
- Dual inlet quadruplex blower design for maximum airflow
- Exhaust guards included
- Filter
- Heavy-gauge Steel Shell with EIA-notched flanges and Baked Powder Finish
- Inlet air cools motor for longer life
- Shielding available for all KOOLTRONIC Packaged Blowers
- Three foot [0.9m] (minimum) 3-wire power cord
- UL/CSA ball-bearing motors

ACCESSORIES AND OPTIONS

	Page
Adapters	145
Airflow Switch	145
Automatic Speed Control	147
Filter Recoating Adhesive	146
Other voltages and frequencies	✦
Replacement Filters	146
Replacement Grille Assemblies	146
Special external paint finishes	✦
Special line cord or connectors	✦

✦ Contact KOOLTRONIC for information.

DESCRIPTION

The KOOLTRONIC EMI/RFI shield conforms to the latest technology in attenuation of electromagnetic interference. The ***KPR Series*** combines this shield with ***Standard Twin Packaged Blowers***. In addition, the shielded front end can be incorporated into the entire broad line of KOOLTRONIC Packaged Blowers, as an option, with a few dimensional changes. This same front end can also be used as an enclosure accessory. See EMI-Shielded Filter-Grille Assemblies.

KOOLTRONIC achieves a high degree of EMI attenuation by the use of proven techniques and scrupulous production and quality controls. The honeycomb element and copper and tin-plated iron wire gasketing are sandwiched between a plated unitized steel frame and a plated flange welded to the cabinet. These are rigidly clamped in place with precision-torqued Allen head cap screws. This permits high clamping pressures for maximum EMI attenuation without distortion. The use of metallic chromate finish on the steel frame and corrosion-protected aluminum honeycomb provides uniform high attenuation and minimum internodal resistance. No conductive plastics are used. A full mounting flange provides a continuous conductive surface for interface with the user's cabinet.

KOOLTRONIC also offers a full line of ***EMI-Shielded Filter-Grille Assemblies***, independent of the blower package. These assemblies can be used at remote inlet or discharge locations, for EMI-protected air paths.

For unusual or higher-level attenuation requirements, or special EMI/RFI problems, consult our Engineering Department.

EMI/RFI-shielded fronts, in packaged blowers or used separately, do not reduce air delivery.

General specifications common to all KOOLTRONIC Packaged Blowers are on the first page of this section.

KOOLTRONIC also designs and manufactures a variety of packaged blowers to meet *unique* specifications. We invite your inquiries about our modification and custom-design capabilities.

CALL 1-800-321-KOOL (5665)
or FAX 609-466-1114

PERFORMANCE GRAPHS

KPR528

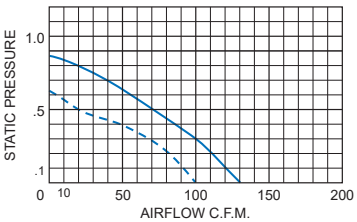

KPR529

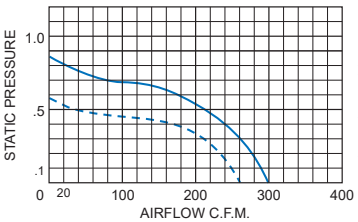

KPR701

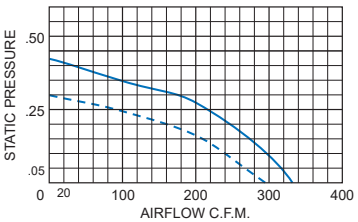

KPR729

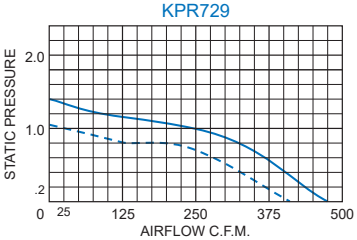

KPR877

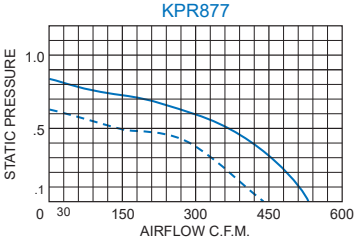

KPR1051

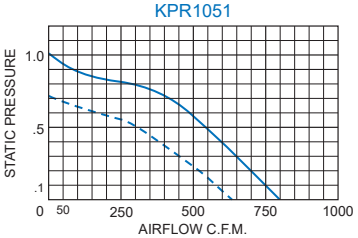

Airflow vs. static pressure curves are shown for 60 Hz (solid line) and 50 Hz (broken line) inputs. Static pressure is in inches of water. For conversion to other units of measurement see page 131.

For assistance in model selection, refer to the Blower & Fan Selection Guides on pages 10 and 142, call KOOLTRONIC, or use one of our FREE design aid software programs.

DIMENSIONS AND DISCHARGE LOCATIONS

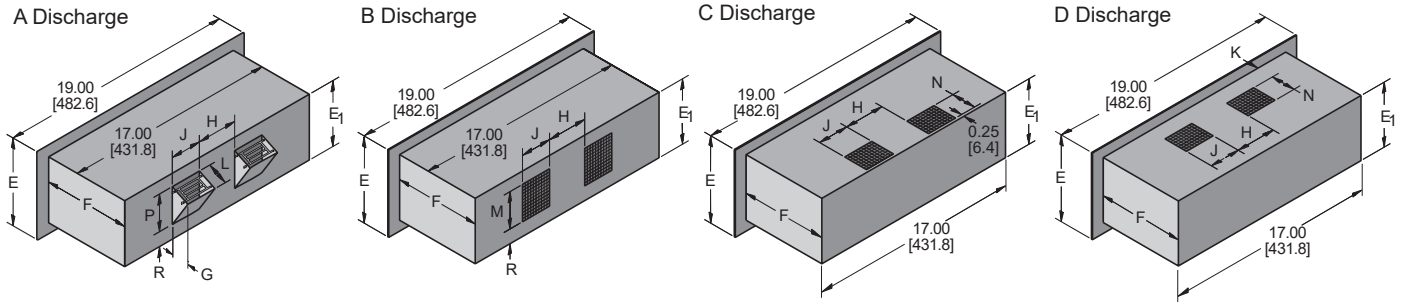

Model	Discharge Available	Max. Panel Height E		E_1		F		G		H		J	
KPR528	A B C D	7.00	[177.8]	5.25	[133.4]	7.00	[177.8]	1.44	[36.6]	3.25	[82.6]	2.50	[63.5]
KPR529	A B C D	7.00	[177.8]	5.25	[133.4]	7.00	[177.8]	1.38	[35.1]	4.50	[114.3]	4.50	[114.3]
KPR701	A B C D	8.75	[222.3]	7.00	[177.8]	9.50	[241.3]	1.81	[46.0]	3.25	[82.6]	4.75	[120.7]
KPR729	A B C D	8.75	[222.3]	7.00	[177.8]	9.50	[241.3]	2.00	[50.8]	4.63	[117.6]	4.88	[123.8]
KPR877▲	A B C D	10.50	[266.7]	8.75	[222.3]	11.00	[279.4]	1.63	[41.4]	2.13	[54.1]	5.94	[150.9]
KPR1051	A B C D	12.25	[311.2]	10.50	[266.7]	12.38	[314.5]	1.62	[41.1]	4.00	[101.6]	4.56	[115.8]

Model	Discharge Available	K		L		M		N		P		R	
KPR528	A B C D	1.38	[35.1]	1.88	[47.8]	3.00	[76.2]	1.94	[49.3]	3.00	[76.2]	1.19	[30.2]
KPR529	A B C D	1.38	[35.1]	1.88	[47.8]	3.00	[76.2]	1.94	[49.3]	3.00	[76.2]	1.19	[30.2]
KPR701	A B C D	1.19	[30.2]	4.00	[101.6]	5.50	[139.7]	3.25	[82.6]	5.50	[139.7]	0.94	[23.9]
KPR729	A B C D	2.25	[57.2]	2.50	[63.5]	4.00	[101.6]	2.50	[63.5]	4.00	[101.6]	1.44	[36.6]
KPR877▲	A B C D	1.75	[44.5]	4.38	[111.3]	6.13	[155.7]	1.81	[46.0]	6.13	[155.7]	1.13	[28.7]
KPR1051	A B C D	1.88	[47.8]	5.63	[143.0]	7.44	[189.0]	4.19	[106.4]	7.44	[189.0]	1.81	[46.0]

Dimensions, inches [mm], are for reference only and subject to change.

TECHNICAL DATA*

Model	CFM @ 0" S.P.	Cutoff S.P.	RPM Nominal	Amps Run.	Amps L.R.	Watts	Approximate Weight Lbs.	Approximate Weight Kg.
KPR528	130	0.87	3150	0.8	1.3	65	18	8.2
KPR529	300	0.87	3000	0.4	1.9	95	18	8.2
KPR701	330	0.42	1600	1.1	1.6	85	23	10.5
KPR729	470	1.40	3250	1.7	3.1	185	25	11.4
KPR877▲	525	0.82	1500	1.3	1.9	140	33	15.0
KPR1051	800	1.00	1500	2.5	5.1	260	40	18.2

*115V, 60 Hz. operation

Attenuation Levels of Standard KOOLTRONIC EMI Shielding

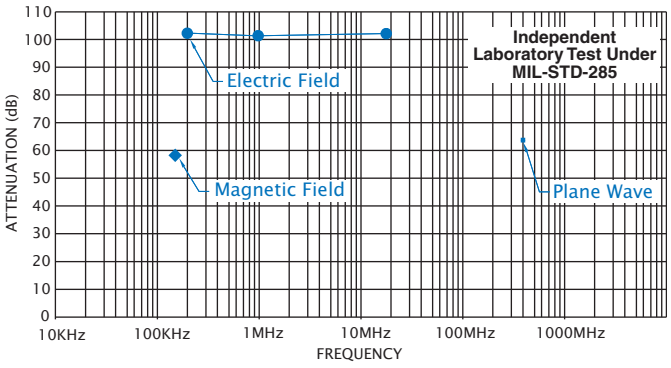

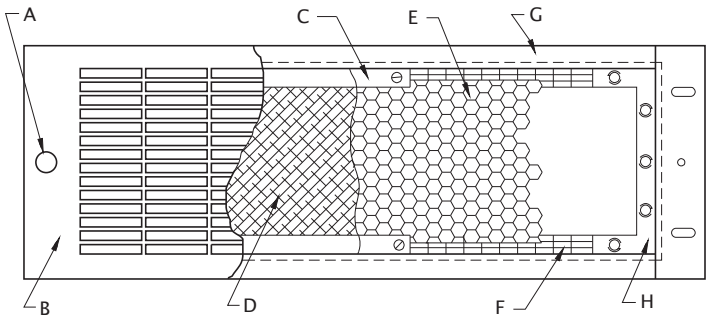

EMI-SHIELDED FILTER-GRILLE ASSEMBLIES: (A) Captive Thumbnut, (B) Grille, (C) Plated Steel Retainer Frame, (D) Aluminum Filter, (E) Honeycomb, (F) EMI Gasket (Plated knitted wire mesh), (G) EMI Frame (Plated steel rear surface), (H) Plated steel surface

HOW TO ORDER

Specify model number, adding discharge suffix A, B, C or D. Example: KPR877A. For 230 VAC operation, add a 2 after the K. Example: K2PR877A.
▲**NOTE:** KPR877 models unavailable in 230 VAC. Contact Kooltronic for availability of 230 VAC models.

EMI/RFI SHIELDED TWIN

BROAD DISCHARGE TWIN PACKAGED BLOWERS



DESCRIPTION

KOOLTRONIC ***Broad Discharge Packaged Blowers*** combine a quadruplex centrifugal blower with an internal plenum chamber to provide an even distribution of air, delivered across the entire width of the cabinet. This permits installation directly beneath the electronics for overall cooling of rows of printed circuit cards or similar electronic components, without need for a space-consuming external plenum chamber.

The blower assembly that provides the cooling air includes the same quality features as in the ***Twin, Recessed*** and ***EMI/RFI-Shielded Packaged Blowers.***

General specifications common to all KOOLTRONIC Packaged Blowers are on the first page of this section.

KOOLTRONIC also designs and manufactures a variety of packaged blowers to meet *unique* specifications. We invite your inquiries about our modification and custom-design capabilities.

CALL 1-800-321-KOOL (5665)
or FAX 609-466-1114

STANDARD FEATURES

- Attractive 19-inch [482.6mm] Stainless Steel Grilles
- Capacities: 270 to 750 CFM
- Dual inlet quadruplex blower design for maximum airflow
- Exhaust guards included
- Filters
- Heavy-gauge Steel Shell with EIA-notched flanges and Baked Powder Finish
- Inlet air cools motor for longer life
- Internal plenum chamber distributes airflow
- Three foot [0.9m] (minimum) 3-wire power cord
- UL/CSA ball-bearing motors

ACCESSORIES AND OPTIONS

	Page
■ Adapters	145
■ Airflow Switch	145
■ Automatic Speed Control	147
■ EMI/RFI Shielding	146
■ Filter Recoating Adhesive	146
■ Other voltages and frequencies	✦
■ Replacement Filters	146
■ Replacement Grille Assemblies	146
■ Special external paint finishes	✦
■ Special line cord or connectors	✦

✦ Contact KOOLTRONIC for information.

PERFORMANCE GRAPHS

KPC529

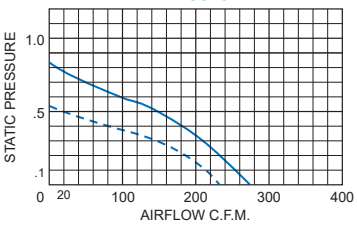

KPC701

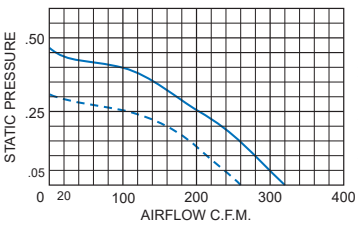

KPC729

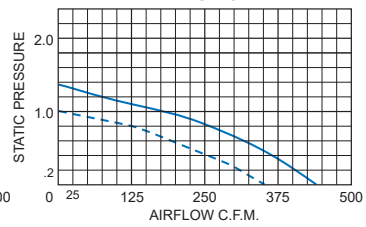

KPC877

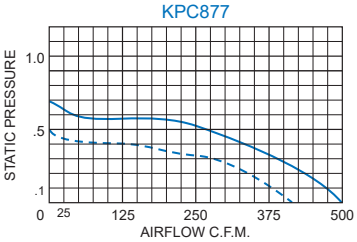

KPC1051

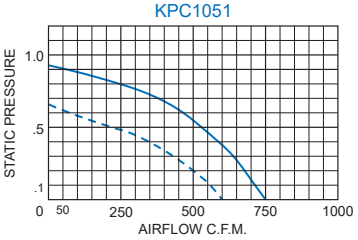

Airflow vs. static pressure curves are shown for 60 Hz (solid line) and 50 Hz (broken line) inputs. Static pressure is in inches of water. For conversion to other units of measurement see page 131.

For assistance in model selection, refer to the Blower & Fan Selection Guides on pages 10 and 142, call KOOLTRONIC, or use one of our FREE design aid software programs.

DIMENSIONS AND DISCHARGE LOCATIONS

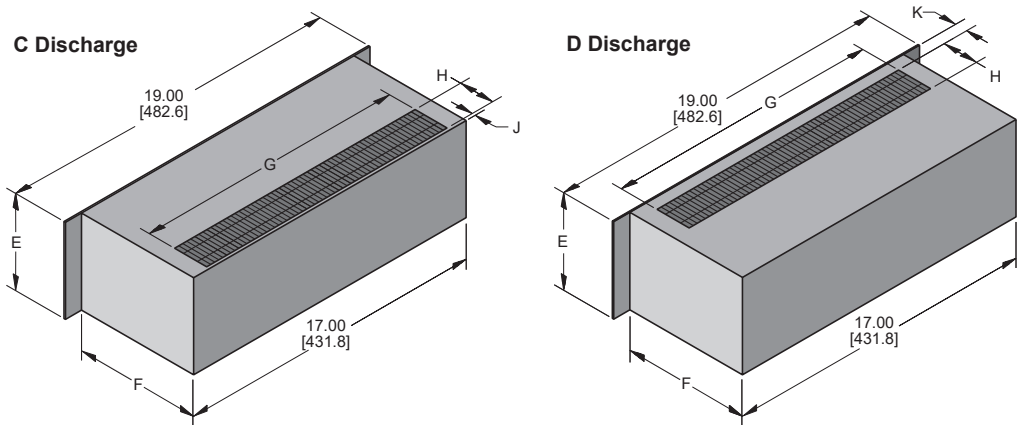

Model	Discharge Available	E		F		G		H		J		K	
KPC529	C D	5.25	[133.4]	6.25	[158.8]	15.06	[382.5]	1.94	[49.3]	0.19	[4.8]	0.69	[17.5]
KPC701	C D	7.00	[177.8]	9.50	[241.3]	16.00	[406.4]	2.50	[63.5]	0.75	[19.1]	0.75	[19.1]
KPC729	C D	7.00	[177.8]	8.25	[209.6]	16.00	[406.4]	2.50	[63.5]	0.75	[19.1]	0.75	[19.1]
KPC877▲	C D	8.75	[222.3]	10.00	[254.0]	16.00	[406.4]	3.19	[81.0]	0.25	[6.4]	0.75	[19.1]
KPC1051	C D	10.50	[266.7]	11.50	[292.1]	16.00	[406.4]	4.19	[106.4]	0.31	[7.9]	0.88	[22.4]

Dimensions, inches [mm], are for reference only and subject to change.

TECHNICAL DATA*

Model	CFM @ 0" S.P.	Cutoff S.P.	RPM Nominal	Amps Run.	Amps L.R.	Watts	Approximate Weight Lbs.	Approximate Weight Kg.
KPC529	270	0.80	3050	1.6	1.9	105	13	5.9
KPC701	320	0.46	1600	1.2	1.6	90	19	8.6
KPC729	435	1.35	3250	1.5	3.1	170	21	9.5
KPC877▲	500	0.70	1500	1.3	1.9	150	32	14.5
KPC1051	750	0.92	1500	2.5	5.1	260	40	18.2

*115V, 60 Hz. operation

HOW TO ORDER

Specify model number, adding discharge suffix C or D. Example: KPC729C. For 230 VAC operation, add a 2 after the K. Example: K2PC729C.
▲**NOTE:** KPC877 models unavailable in 230 VAC. Contact Kooltronic for availability of 230 VAC models.

BROAD DISCHARGE TWIN

PAGODA SERIES
PACKAGED IMPELLER BLOWERS



DESCRIPTION

The ***Pagoda Series*** uses motorized impeller blowers for maximum efficiency and performance at reduced noise levels and have been designed for mounting on the top or sides of the cabinet. Air flows out of the cabinet into the inlet of the blower, exiting on all four sides.

The Pagoda is available in standard and custom sizes. They are designed to accommodate 115 and 230 volts, 50 and 60 Hz, and are available in various sizes, flows and static pressures for a wide range of applications. Components are UL, cUL Recognized and the motor carries a CE mark.

General specifications common to all KOOLTRONIC Packaged Blowers are on the first page of this Section.

KOOLTRONIC also designs and manufactures a variety of packaged blowers to meet *unique* specifications. We invite your inquiries about our modification and custom-design capabilities.

CALL 1-800-321-KOOL (5665)
or FAX 609-466-1114

STANDARD FEATURES

- Ball-bearing motors
- Baked Powder Finish
- Capacities: 182 to 1615 CFM
- Compact size
- Heavy-gauge Steel Shell
- Integral finger guards
- Low noise level
- Occupies no internal cabinet space
- Precision balanced external rotor design
- Three foot [0.9m] (minimum) 3-wire power cord

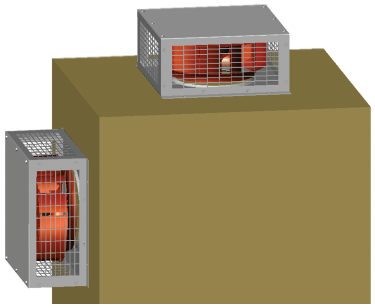

Versatile Mounting:
Mount on cabinet's top, side or even bottom.

PERFORMANCE GRAPHS

KP2E192/40

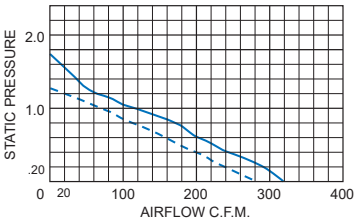

KP2E220/45

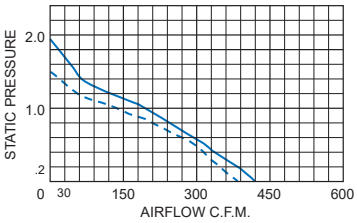

KP2E225/40

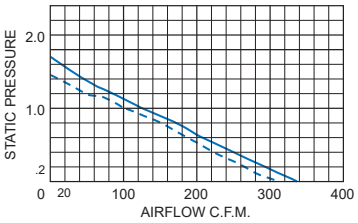

Airflow vs. static pressure curves are shown for 60 Hz (solid line) and 50 Hz (broken line) inputs. Static pressure is in inches of water. For conversion to other units of measurement see page 131.

KP2E225/63

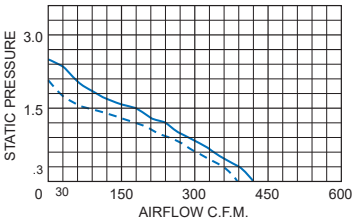

KP2E250/56

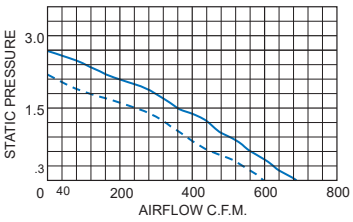

KP4E192/40

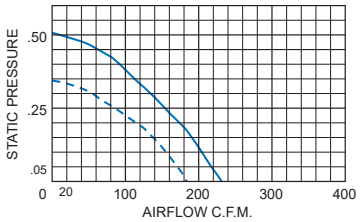

KP4E225/63

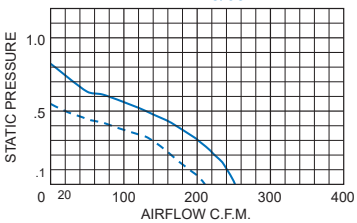

KP4E280/80

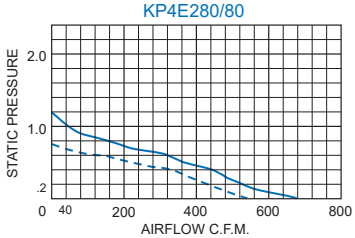

KP4E315/101

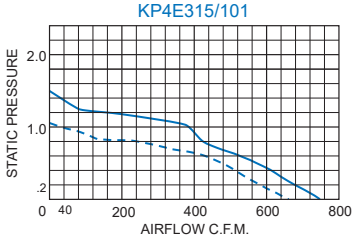

KP4R355/127

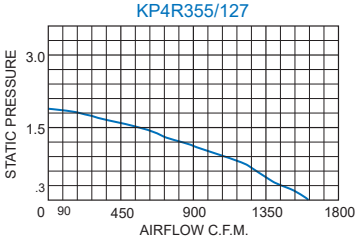

PAGODA

For assistance in model selection, refer to the Blower & Fan Selection Guides on pages 10 and 142, call KOOLTRONIC, or use one of our FREE design aid software programs.

DIMENSIONS inches [mm]

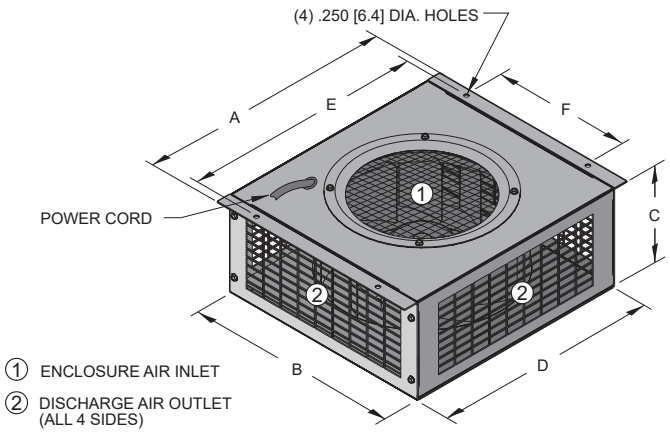

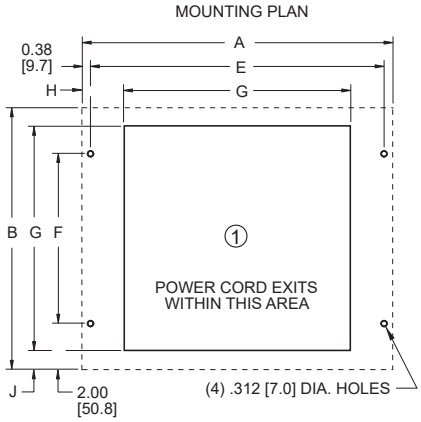

Model	A	B	C	D	E
KP2E192/40	13.50 [342.9]	11.38 [289.1]	5.18 [131.6]	12.00 [304.8]	12.75 [323.9]
KP2E220/45	13.50 [342.9]	11.38 [289.1]	5.18 [131.6]	12.00 [304.8]	12.75 [323.9]
KP2E225/40	13.50 [342.9]	11.38 [289.1]	5.18 [131.6]	12.00 [304.8]	12.75 [323.9]
KP2E225/63	13.50 [342.9]	11.38 [289.1]	5.18 [131.6]	12.00 [304.8]	12.75 [323.9]
KP2E250/56	15.50 [393.7]	13.38 [339.9]	7.00 [177.8]	14.00 [355.6]	14.75 [374.7]
KP4E192/40	13.50 [342.9]	11.38 [289.1]	5.18 [131.6]	12.00 [304.8]	12.75 [323.9]
KP4E225/63	13.50 [342.9]	11.38 [289.1]	5.18 [131.6]	12.00 [304.8]	12.75 [323.9]
KP4E280/80	15.50 [393.7]	13.38 [339.9]	7.00 [177.8]	14.00 [355.6]	14.75 [374.7]
KP4E315/101	15.50 [393.7]	13.38 [339.9]	7.00 [177.8]	14.00 [355.6]	14.75 [374.7]
KP4R355/127	16.75 [425.5]	15.25 [387.4]	10.65 [270.5]	15.25 [387.4]	14.75 [374.7]

Model	F	G	H	J
KP2E192/40	7.38 [187.5]	9.50 [241.3]	2.00 [50.8]	0.94 [23.9]
KP2E220/45	7.38 [187.5]	9.50 [241.3]	2.00 [50.8]	0.94 [23.9]
KP2E225/40	7.38 [187.5]	9.50 [241.3]	2.00 [50.8]	0.94 [23.9]
KP2E225/63	7.38 [187.5]	9.50 [241.3]	2.00 [50.8]	0.94 [23.9]
KP2E250/56	9.38 [238.3]	13.10 [332.7]	1.20 [30.5]	0.14 [3.6]
KP4E192/40	7.38 [187.5]	9.50 [241.3]	2.00 [50.8]	0.94 [23.9]
KP4E225/63	7.38 [187.5]	9.50 [241.3]	2.00 [50.8]	0.94 [23.9]
KP4E280/80	9.38 [238.3]	13.10 [332.7]	1.20 [30.5]	0.14 [3.6]
KP4E315/101	9.38 [238.3]	13.10 [332.7]	1.20 [30.5]	0.14 [3.6]
KP4R355/127	9.38 [238.3]	13.10 [332.7]	1.38 [35.1]	0.63 [16.0]

Dimensions, inches [mm], are for reference only and subject to change.

PAGODA

TECHNICAL DATA*

Model	Type	CFM @ 0" S.P.	Cutoff S.P.	dBA	Amps	Watts	Approximate Weight Lbs.	Approximate Weight Kg.
KP2E192/40	2-Pole	319	1.72	63.6	0.74	85	11	5.0
KP2E220/45	2-Pole	418	1.94	68.6	1.05	120	10	4.5
KP2E225/40	2-Pole	338	1.71	71.7	1.11	127	13	5.9
KP2E225/63	2-Pole	421	2.66	73.4	1.89	215	14	6.4
KP2E250/56	2-Pole	688	2.68	77.6	2.33	269	17	7.7
KP4E192/40	4-Pole	182	0.55	55.6	0.25	26	11	5.0
KP4E225/63	4-Pole	253	0.81	59.1	0.62	56	12	5.5
KP4E280/80	4-Pole	630	1.18	65.8	0.94	101	16	7.3
KP4E315/101	4-Pole	749	1.46	68.7	1.36	156	18	8.2
KP4R355/127	4-Pole	1615	1.93	74.0	4.00	450	36	16.3

*115V, 60 Hz. operation

HOW TO ORDER

Specify model number. For 230 VAC operation, add a 2 after the K. Example: K2P4E195/35.

BLOWER AND FAN SELECTION NOMOGRAPH

This nomograph will assist you in making a rapid evaluation of the airflow required to cool the average electronics enclosure, if the approximate wattage to be dissipated and the acceptable temperature rise are known.

First, determine the amount of heat to be removed, in watts. Then identify the acceptable rise in temperature. Theoretically, this is the maximum allowable component temperature minus the maximum anticipated ambient temperature.

Lay a straight edge across the nomograph to intersect these two points. The straight edge will intersect the required volume on the airflow scale. The nomograph automatically includes a "safety factor" of 25 percent more air than is dictated by strict adherence to theoretical considerations. This is expressed by the constant, 1.25, in the first two equations.

Based on standard air density (0.075 lbs. per cubic foot), the nomograph furnishes quick solutions for the following equations:

$$CFM = \frac{3.17P}{T_F}(1.25)$$ for temperature rise in degrees Fahrenheit

$$CFM = \frac{1.76P}{T_C}(1.25)$$ for temperature rise in degrees Celsius

The average temperature rise (T_F or T_C) in the cabinet equals the cabinet outlet temperature minus the cabinet inlet temperature.

CFM = volume flow of cooling air in cubic feet per minute.

P = power to be dissipated in watts.

The constant, 1.25, represents the "safety factor" discussed above.

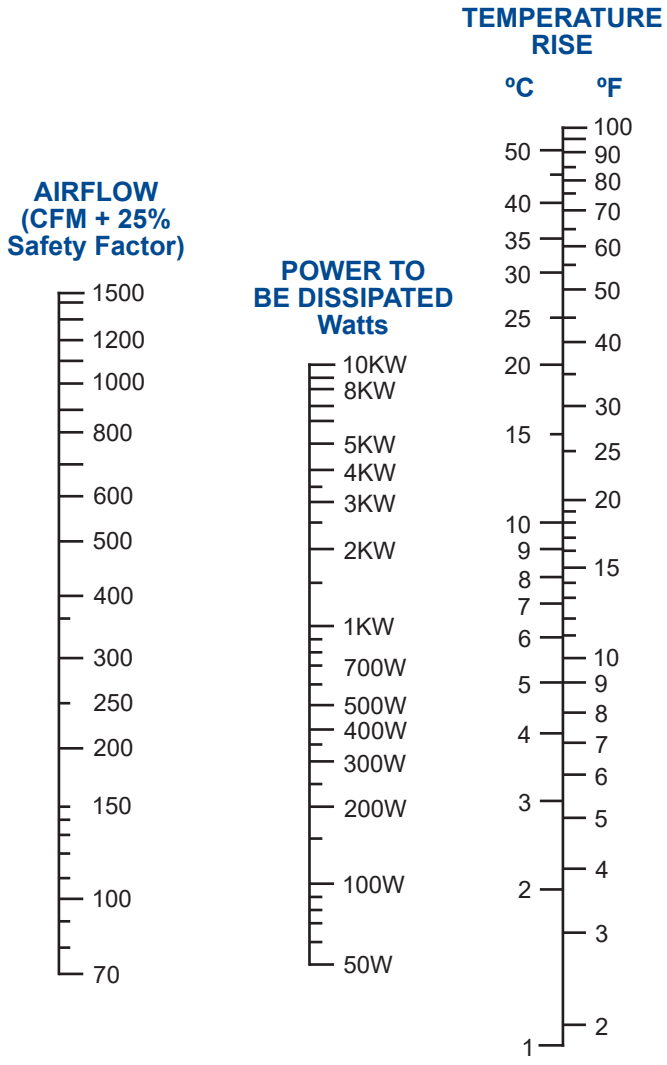

Specific heat of air is considered constant in these formulae. If the atmospheric density at which the equipment is to operate deviates significantly from standard air density, the following formula will convert the approximation obtained from the nomograph to the CFM requirement at the different density:

$$CFM_n + CFM_{0.075}\ \frac{(0.075)}{\rho_n}$$

Where
Subscript n = non-standard air density
Subscript 0.075 = nominal standard air density
ρ_n = non-standard air density (lbs. per cubic foot)

PACKAGED BLOWER ACCESSORIES AND OPTIONS

ADAPTERS (Set of two): These extend the width of any 19-inch [482.6mm] Packaged Blower, Packaged Fan or Rack-Mounted Air Conditioner to permit mounting in a cabinet designed for 24-inch [609.6mm] units. The EIA-notched adapters are covered by a plate of mirror-finish stainless steel to match KOOLTRONIC Standard Grilles.

These adapters are non-structural. Therefore, Packaged Blowers and Rack-Mounted Air Conditioners must be supported at the rear, due to their weight.

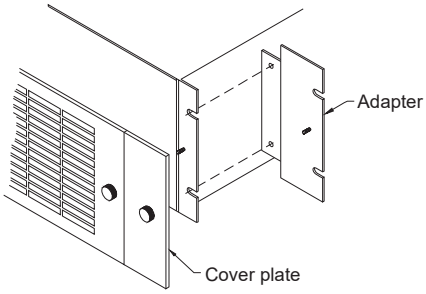

Model Mirror Finish	Brushed Finish	Height	
KA24-3M	KA24-3	3.50	[88.9]
KA24-5M	KA24-5	5.25	[133.4]
KA24-7M	KA24-7	7.00	[177.8]
KA24-8M	KA24-8	8.75	[222.3]
KA24-10M	KA24-10	10.50	[266.7]

Dimensions, inches [mm], are for reference only and subject to change.

AIRFLOW SWITCH: Protects equipment against damage caused by loss of cooling airflow, by activating an alarm or turning off power. The switch can be mounted on any suitable surface which allows the stainless steel air vane to be placed in the critical airstream. This switch is a single-pole double-throw type, with normally open and normally closed contacts.

The UL rating for the level actuated switch is 11 amps at 250 volts AC. A three foot [0.9m], power cord is provided, allowing connection to normally open or normally closed circuits.

The choice of air vanes is determined by location and orientation in the airstream, and the normal operating air velocity at the point of installation. Refer to the chart below or consult KOOLTRONIC Engineering for assistance.

For other switch orientations or if air velocity cannot be measured by conventional means, KOOLTRONIC can supply additional individual or sets of air vanes to determine the optimum size.

DRAWINGS

Dimensions, inches [mm], are for reference only and are subject to change.

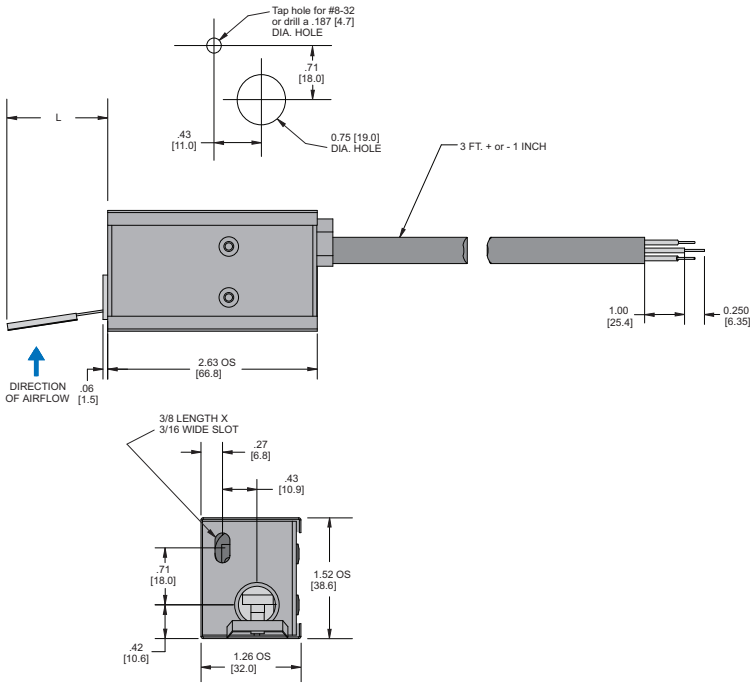

TECHNICAL DATA

Orientation of Airflow Switch

Model	Dim. "L" Max.	Vane Length	Vertical Airstream: Airstream Up, Increasing Air, Actuate ft/min	Vertical Airstream: Airstream Up, Decreasing Air, Deactuate ft/min	Vertical Airstream: Airstream Down, Increasing Air, Actuate ft/min	Vertical Airstream: Airstream Down, Decreasing Air, Deactuate ft/min	Horizontal Airstream: Arm Horizontal, Increasing Air, Actuate ft/min	Horizontal Airstream: Arm Horizontal, Decreasing Air, Deactuate ft/min	Horizontal Airstream: Arm Vertical Vane Down, Increasing Air, Actuate ft/min	Horizontal Airstream: Arm Vertical Vane Down, Decreasing Air, Deactuate ft/min
KV-1A	2.940 [74.7]	2.500 [63.5]	550	400	700	600	500	400	600	400
KV-2A	2.677 [68.0]	1.875 [47.6]	850	750	800	750	750	650	800	750
KV-3A	2.489 [63.2]	1.688 [42.9]	950	800	900	800	1000	900	1200	1100
KV-4A	1.935 [44.1]	1.500 [38.1]	1150	1000	1100	1000	1100	1050	1400	1300
KV-5A	2.052 [52.1]	1.250 [31.7]	1200	1100	1100	900	1200	1100	1300	1200
KV-6A	1.802 [45.8]	1.000 [25.4]	1400	1300	1300	1200	1350	1300	1600	1550
KV-7A	1.552 [39.4]	0.750 [19.0]	1900	1850	1900	1800	1650	1450	1900	1800
KV-8A	1.489 [37.8]	0.687 [17.4]	2100	1900	1800	1700	1950	1850	2000	1950
KV-9A	1.240 [31.5]	0.875 [22.2]	2200	2000	2250	2150	2250	2150	2200	2100

Dimensions, inches [mm], are for reference only and subject to change.

PACKAGED BLOWER ACCESSORIES AND OPTIONS (cont.)

FILTERS: All KOOLTRONIC filters consist of a multi-layer grid of sturdy corrugated aluminum, securely held in a one-piece aluminum frame. Filters are required wherever air is drawn into an electronics enclosure or related cooling equipment to keep internal parts as clean as possible.

A non-drying adhesive coating traps a high percentage of particulate matter. These filters are reuseable, they may be washed and recoated with the appropriate filter recoating adhesive. Replacements are available for those which become damaged or otherwise non-serviceable.

Models:	KP350, KPL528, KPL529	KP528, KP529, KPC529, KPL701, KPL729, KPR528, KPR529	KP701, KP729, KPC701, KPC729, KPL877, KPR701, KPR729	KP877, KPC877, KPL1051, KPR877	KP1051, KPC1051, KPR1051
Filter P/N:	3501F	5251F	7001F	8751F	10501F
Size:	16.63 x 3.13 x.50 [422.4 x 79.5 x 12.7]	16.63 x 5.13 x.50 [422.4 x 130.3 x 12.7]	16.63 x 6.63 x .50 [422.4 x 168.4 x 12.7]	16.63 x 8.38 x .50 [422.4 x 212.9 x 12.7]	16.63 x 10.13 x .50 [422.4 x 257.3 x 12.7]

Dimensions, inches [mm], are for reference only and subject to change.

FILTER RECOATING ADHESIVE: This compound is a superior product for recoating filters after washing. The adhesives penetrate dirt layers to keep the filter surface tacky for longer effective performance between washings. Part No. A-16 - 10 ounce container.

STANDARD STAINLESS STEEL GRILLES: These attractive grilles are made of mirror-finish stainless steel and are identical to those on KOOLTRONIC Packaged Blowers. All are 19-inch [482.6mm] wide. They are 65% open and comply with OSHA and UL safety standards. Photographs appear in various product sections.

GRILLE ASSEMBLIES: These assemblies are ideal for venting applications on the enclosure. These attractive grilles are made of mirror-finish stainless steel and are identical to those furnished on KOOLTRONIC Packaged Blowers. All are 19-inch [482.6mm] wide. They are 65% open, comply with OSHA and UL safety standards, and include knurled captive fasteners for easy attachment and removal. Photographs appear in various product sections.

FILTER-GRILLE ASSEMBLIES: To provide a filtered air intake in applications where the enclosure is being exhausted, each KOOLTRONIC Filter-Grille Assembly consists of a Grille Assembly, filter and two EIA-notched brackets. By loosening the captive thumbnuts, the filter is instantly available for cleaning.

Model		
Grille Assemblies	Filter Grille Assemblies	Height
3501X	KFG350-19	3.50 [88.9]
5251X	KFG525-19	5.25 [133.4]
7001X	KFG700-19	7.00 [177.8]
8751X	KFG875-19	8.75 [222.3]
10501X	KFG1050-19	10.50 [266.7]
Overall depth, including fasteners:		
0.50 [12.7]	0.75 [19.1]	

Dimensions, inches [mm], are for reference only and subject to change.

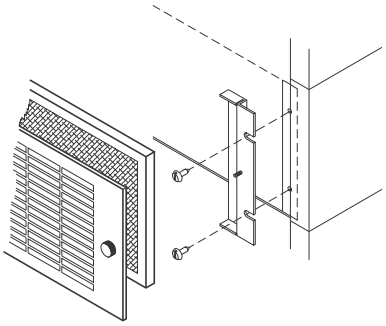

EMI/RFI-SHIELDED FILTER GRILLE ASSEMBLIES: For enclosures with filtered air intakes requiring EMI shielding, these assemblies are identical in design to the front ends of the KOOLTRONIC EMI/RFI Shielded Packaged Blowers (see page 136). Each consists of a Grille Assembly, filter and EMI frame with integral EIA-notched flanges. For venting applications requiring no filtration, removal of the filter will not materially effect EMI attenuation.

Model	Height
KFRG350-19	5.25 [133.4]
KFRG525-19	7.00 [177.8]
KFRG700-19	8.75 [222.3]
KFRG875-19	10.50 [266.7]
KFRG1050-19	12.25 [311.2]
Overall depth, including fasteners:	
Standard Grille - 1.88 [47.8]	

Dimensions, inches [mm], are for reference only and subject to change.

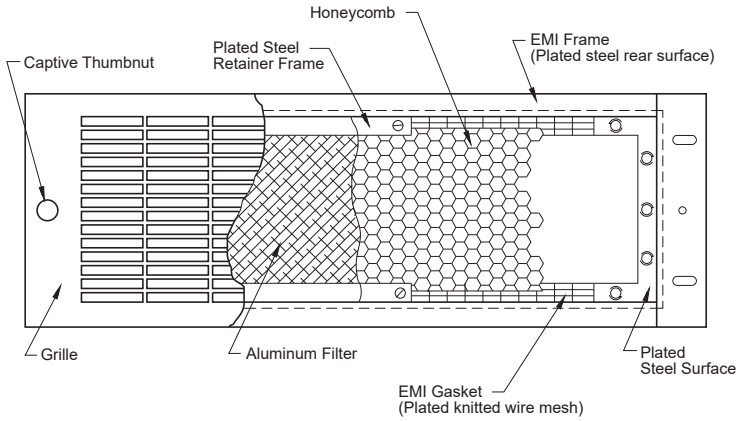

AUTOMATIC SPEED CONTROL

DESCRIPTION

The Kooltronic Fan and Blower Automatic Speed Control (Part Number KSC100) is a solid state “smart” controller packaged in a NEMA 1 type enclosure for remote mounting. The allowable input power supply range is 95 to 250 Volts, 47 to 63 Hz. It is furnished standard with an IEC 320 connector, a power supply fuse and a temperature sensor. Additional temperature sensors are optional. Power Cord is not provided.

The controller will operate single or multiple fans or blowers of compatible voltage and frequency up to a combined load of 6 Amps. The controller may be operated by either a control voltage signal of 0 to 10 VDC, a control current signal of 0 to 20 mA or one to three temperature sensors. With multiple temperature sensors, the controller will respond to the highest sensed temperature.

The control circuit board is furnished with a terminal strip for field connecting the sensor and fan wires. A pressure type strain relief connector is furnished in the enclosure. If required by the installation or by code, this connector can be replaced with a ½-inch [12.7mm] trade size conduit connector.

A wide variety of control logic options can be field programmed into the controller by means of a board mounted DIP switch. These include fan idle or starting speed at 30%, 40%, 50% or 60% of supply voltage, fan on or off below the idle setting, control temperature setting of 86ºF (30ºC), 95ºF (35ºC), 104ºF (40ºC), 113ºF (45ºC), and temperature differential settings of 7ºF (4ºC) and 18ºF (10ºC). The selectable fan on/off feature is operative when the temperature(s) drop below the control temperature setting.

Consult factory for use with compatible KOOLTRONIC fans or blowers.



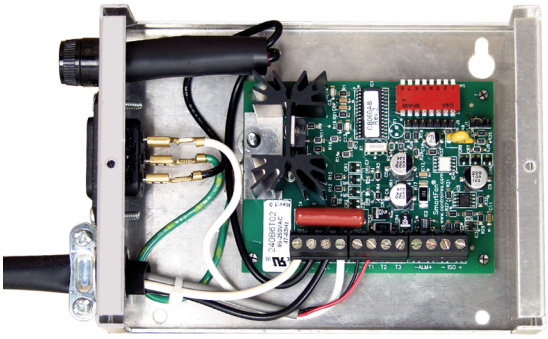

DRAWINGS AND DIMENSIONS

P/N: KSC100

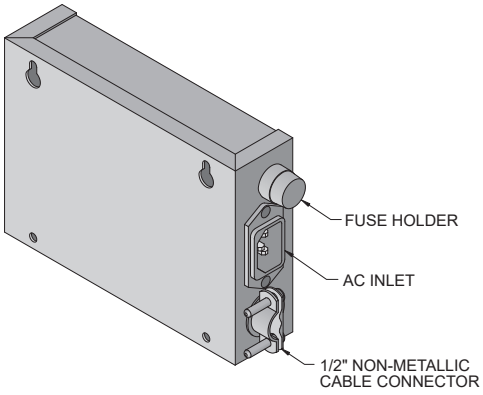

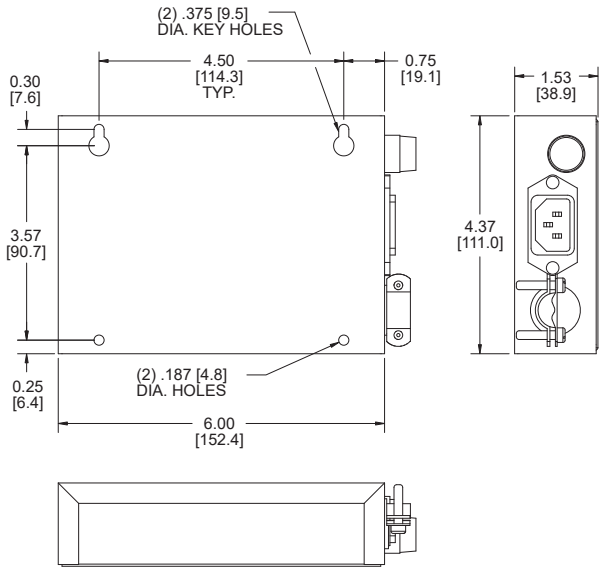

Dimensions, inches [mm], are for reference only and subject to change.



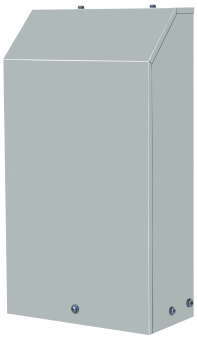







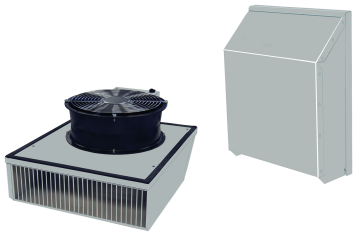

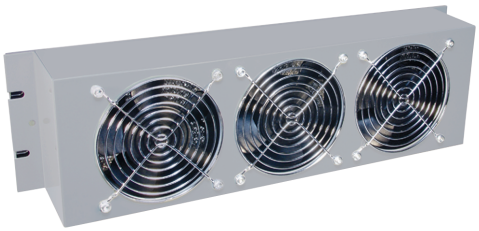







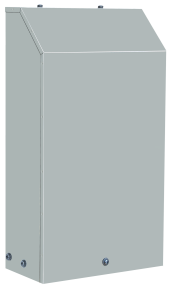

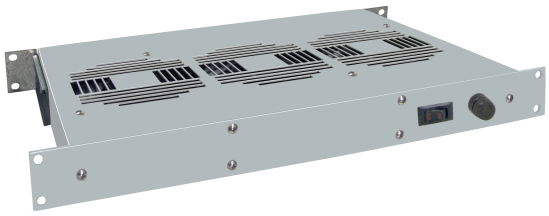

FANS

The KOOLTRONIC line of propeller-type fans offers a wide selection of airflow capacities and styles to meet your needs efficiently and economically. They are ideal for clean-environment applications where there is minimal static pressure and equipment can tolerate temperatures higher than ambient.

The wide range of models and configurations offers unsurpassed capability and flexibility: from the ultra-compact yet powerful ***Thin Fan Series*** (210 to 840 CFM capacities) to ***High Performance Fans*** capable of delivering far more air than comparably sized units to ***Twin, Triple*** and ***Filter Box Packaged Fans*** (250 to 1310 CFM capacities) to ***KoolTrays*** with up to 9 Fans (315 to 945 CFM capacities). Our filter fan series offer NEMA ratings for virtually every application. The ***Advantage Series Filter Fans,*** with a ***NEMA 12*** Rating are available in a variety of sizes and cooling capacities. The ***Sentry Series Filter Fans*** with a ***NEMA 3R*** Rating offer the versatility and convenience of indoor or outdoor cooling, and are available in a variety of voltages and protection levels. The ***Guardian/GuardianX Series Filter Fans*** are ***NEMA 4*** or ***4X Rated***, and are necessary in washdown, wastewater or other challenging applications.

Each fan is engineered for performance and built for reliability. All applicable components are UL/CSA Recognized.

Popular fans are stocked and ready to ship. Emergency shipment service is available.

KOOLTRONIC also designs and manufactures a variety of fans to meet unique specifications. We invite your inquiries about our modification and custom-design capabilities.

GENERAL SPECIFICATIONS FOR ALL FANS

RUGGED CONSTRUCTION: Precision-engineered heavy gauge steel construction insures fans stand up under tough applications.

BAKED POWDER FINISH: Durable, baked-on gray powder finish is standard on fans. Other finishes and colors are available.

PRECISION BALL-BEARING MOTORS: All motors, whether permanent split capacitor or shaded pole, are UL/CSA Recognized and include automatic-reset thermal overload protection. Designed for low temperature rise, KOOLTRONIC motors are also cooled by the fan's intake air, for maximum motor life. All motors meet Federal Specification CC-M-1807A, and include double-sealed or double-shielded precision ball bearings which meet Federal Specification FF-B-171A. Special permanent lubricants perform over a broad temperature range: -20ºF [-29ºC] to 250ºF [121ºC]. Consult KOOLTRONIC for motors designed to meet military or extreme environmental specifications.

POWER: 115 VAC or 230 VAC, 50/60 Hz is standard, except for the KP1212, which is unavailable in 230 VAC. For multiphase power, other voltages and frequencies or brushless DC applications, consult KOOLTRONIC.

ADDITIONAL SPECIFICATIONS:

KoolTrays . . . . . .Page 154
Packaged Fans . . . . . .Page 156

AIRFLOW AND STATIC PRESSURE CONVERSION FACTORS

Multiply airflow in cubic feet per minute (CFM) by:
- 1.7 to obtain airflow in cubic meters per hour (m^3/hr.)
- 0.47 to obtain airflow in liters per second (L/S)

Multiply static pressure in inches of water (in. W.G.) by:
- 25.4 to obtain static pressure in millimeters of water (mm W.G.)
- 249 to obtain static pressure in Pascals (Pa)

HIGH PERFORMANCE FANS

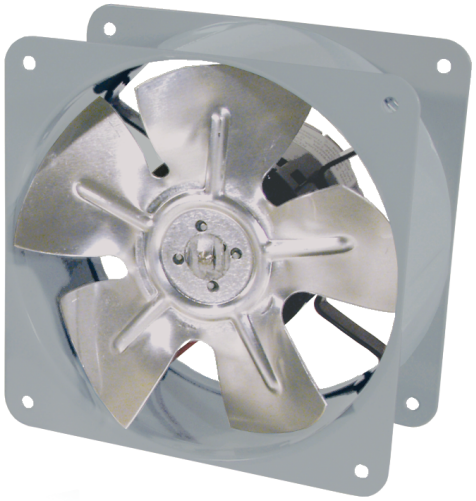

DESCRIPTION

High Performance Fans are ideal for applications which present the challenges of severe space limitations and/or higher static pressures that prevent the use of conventional fans. They are typically found in telecommunications and medical application, industrial control and printed circuit board arrays.

KB653: Within its recommended operating range (150-385 CFM), the KB653 fan provides more air than other fans of comparable size. It is also quieter, less costly and overcomes higher static pressures. It can be mounted to pressurize or exhaust the enclosure. (Pressurizing, with use of a filter, is preferred).

General specifications common to all KOOLTRONIC Fans are on the first page of this section.

KOOLTRONIC also designs and manufactures a variety of fans to meet *unique* specifications. We invite your inquiries about our modification and custom-design capabilities.

CALL 1-800-321-KOOL (5665)
or FAX 609-466-1114

HIGH PERFORMANCE

FEATURES

- 12-inch [300mm] (minimum) power and ground leads
- Both models can pressurize or exhaust
- Capacities: 385 CFM
- Complete line of accessories
- High static pressure performance
- Quiet operation
- Rugged Construction with Baked Powder Finish
- Small size for restricted spaces
- UL/CSA ball bearing motors

ACCESSORIES AND OPTIONS

	Page
■ Automatic Speed Control	147
■ Filter Recoating Adhesive	154
■ Special external paint finishes	✦
■ Special line cord or connectors	✦
■ Variable Speed Control	✦

✦ Contact KOOLTRONIC for information.

See additional Accessories on next page.

PERFORMANCE GRAPHS

KB653

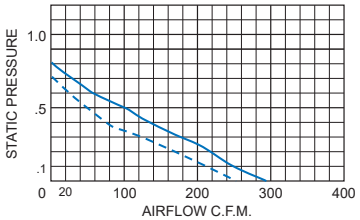

Airflow vs. static pressure curves are shown for 60 Hz and 50 Hz (broken line) inputs. Static pressure is in inches of water. For conversion to other units of measurement see page 147.

For assistance in model selection, refer to the Blower & Fan Selection Guides on pages 10 and 142, call KOOLTRONIC, or use one of our FREE design aid software programs.

DIMENSIONS inches [mm]

KB653

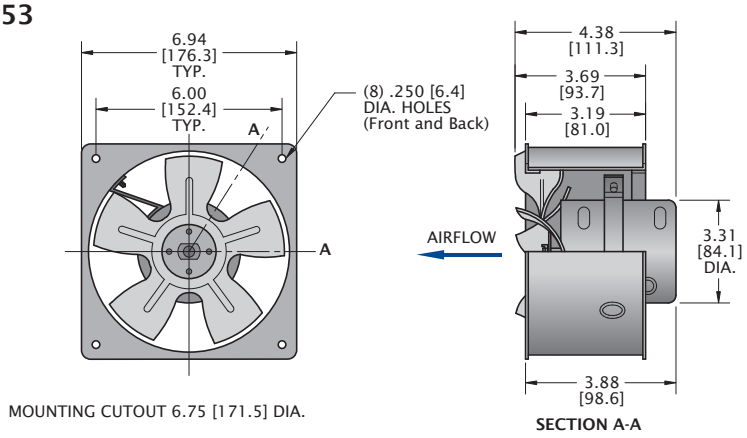

MOUNTING CUTOUT 6.75 [171.5] DIA.

SECTION A-A

ACCESSORIES FOR HIGH PERFORMANCE FANS

The following accessories, available at moderate cost, add versatility to the application of these High Performance Fans.

KB653 FAN

FILTER: Model 654F: 8.25″ [209.6mm] square x 0.50″ [12.7mm] deep. See page 152 , Filters, for description.

FILTER HOLDER: Model 654HF: Precision-made heavy-gauge steel construction. Can be mounted either internally or externally on enclosure using (4) .187 [4.7mm] dia. holes (See diagram). Suggested use is on the intake (motor) side of the fan where it will add less than 0.75″ [19.1mm] to depth of fan. Filter inserts easily.

GUARD: Model 654G: Made of sturdy corrosion-protected wire, these guards comply with OSHA and UL safety standards. Suggested use is on blade side of fans and on motor side, if being used without a filter. Adds less than 0.75″ [19.1mm] to depth of fan.

MODEL 654HF FILTER HOLDER

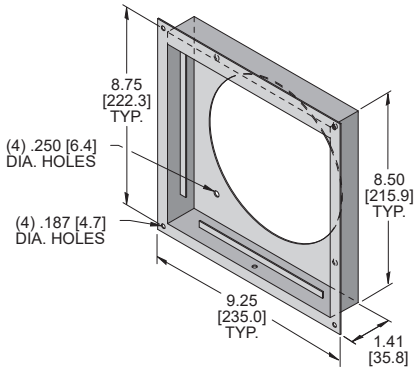

CAUTION: We strongly recommend proper guarding of fans to prevent serious injury.

TECHNICAL DATA*

Model	Volts/Hz	CFM@ 0" S.P.	RPM Nominal	Amps Run.	Amps L.R.	Watts	Weight Lbs.	Weight Kg.
KB653	115/60	385	3200	1.7	2.4	132	5	2.3
KB653	115/50	330	3900	1.7	2.4	132	5	2.3
K2B653	230/60	385	3200	1.7	2.4	132	5	2.3
K2B653	230/50	330	3900	1.7	2.4	132	5	2.3

HOW TO ORDER

FANS: Specify model number. For 230 VAC operation, add a 2 after the K. Example: K2B653.

ACCESSORIES: Specify model number.

THIN FANS



DESCRIPTION

These uniquely compact and versatile fans are designed specifically for cooling electronics and are unsurpassed for their economy of space. Delivering from 210 to 750 CFM, these powerful fans provide a large volume of air to ensure a broad distribution of the cooling effect throughout an enclosure. Complementing these fans is a complete line of accessories.

KOOLTRONIC ***Thin Fans*** are designed for mounting in virtually any position, internally or externally. With or without accessories, these fans usually can be mounted directly to a panel or door of the electronics enclosure. Often they can be located in the base or top of the enclosure, leaving side walls and all or most of the panel space free.

Each fan, whether a B Series or an S Series, can be used to either pressurize or exhaust the enclosure by simply reversing its orientation. (See Typical Accessory Combination and Mounting Orientations diagram on page 152). After selecting the basic model of fan for the performance required, the final choice will be determined by the differences in their configurations and dimensions, the preferred location for mounting and whether the need is to pressurize or exhaust the enclosure. (See "Pressurize, Don't Vacuumize" in the ***Cabinet Cooling Tips*** section of the ***Design Guide***). Because of the numerous combinations of choices available, virtually any requirement can be met.

General specifications common to all KOOLTRONIC Fans are on the first page of this section.

KOOLTRONIC also designs and manufactures a variety of fans to meet *unique* specifications. We invite your inquiries about our modification and custom-design capabilities.

CALL 1-800-321-KOOL (5665)
or FAX 609-466-1114

THIN FANS

FEATURES

- 12-inch [300mm] (minimum) power and ground leads
- Capacities: 210 to 750 CFM
- Complete line of accessories
- Each model can pressurize or exhaust
- Extremely compact
- Rugged Construction with Baked Powder Finish
- UL/CSA ball-bearing motors
- Versatile mounting configurations

ACCESSORIES AND OPTIONS

	Page
Automatic Speed Control	147
Filters	154
Filter Holders	154
Filter Recoating Adhesive	154
Grille	154
Guard	154
Mounting Sleeve	154
Special external paint finishes	✦
Special line cord or connectors	✦

✦ Contact KOOLTRONIC for information.

PERFORMANCE GRAPHS

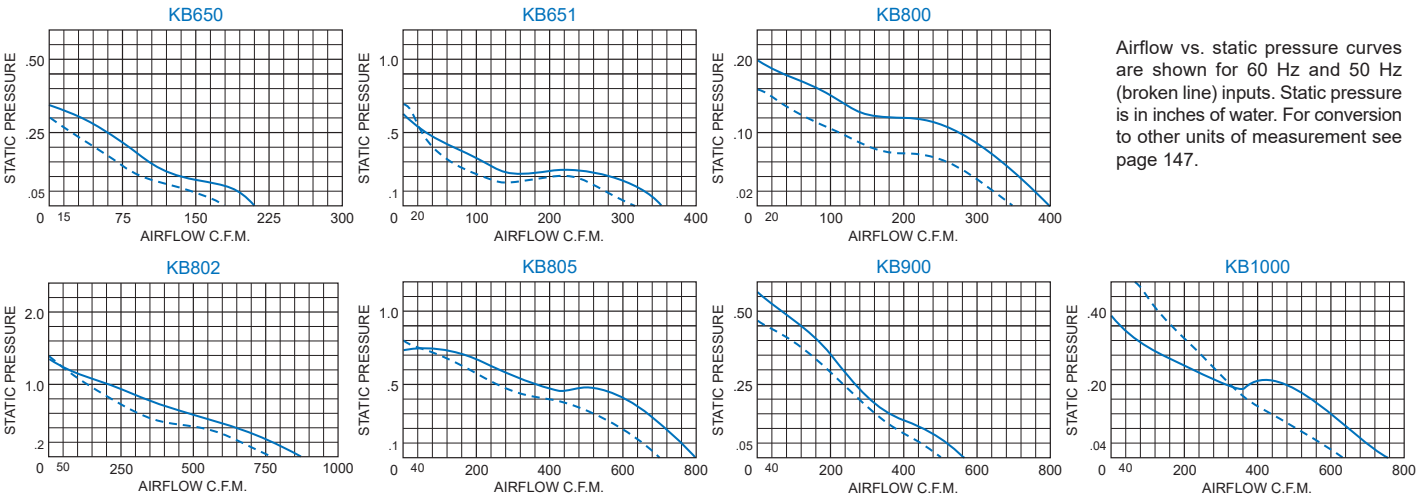

Airflow vs. static pressure curves are shown for 60 Hz and 50 Hz (broken line) inputs. Static pressure is in inches of water. For conversion to other units of measurement see page 147.

For assistance in model selection, refer to the Blower & Fan Selection Guides on pages 10 and 142, call KOOLTRONIC, or use one of our FREE design aid software programs.

DIMENSIONS inches [mm]

B SERIES

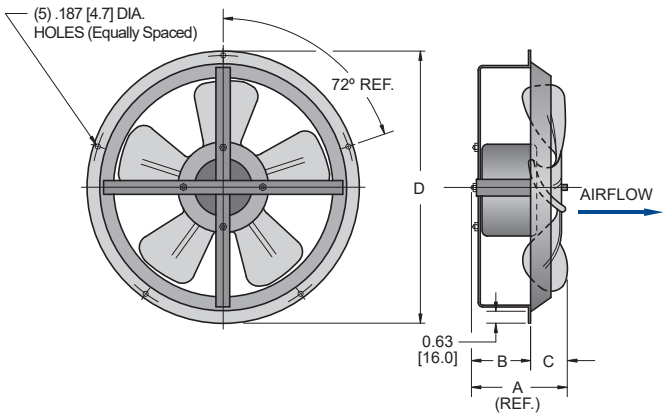

S SERIES

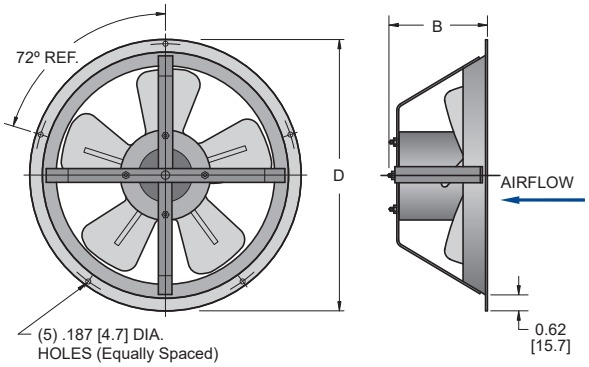

KB802 and KB1000 Fans: Motor mounting configuration is different, but falls within dimensional envelope.

MODEL KB802 FANS

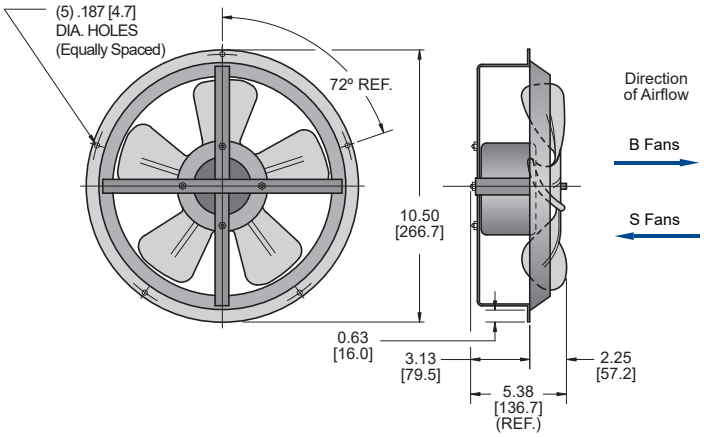

KB802 B & S Series Blade Diameter: 8.00 [203.2]

KB802 Fans: Capacitor boot and bracket are shipped loose, for user mounting.

For illustration of mounting orientations, see Typical Accessory Combination and Mounting Orientations diagram on the next page.

CAUTION: We strongly recommend proper guarding of fans to prevent serious injury.

Model	A	B		C	D	Mounting		Blade
		B Fans	S Fans			Cutout	B.C.	Dia.
KB650▲	3.63 [92.2]	2.00 [50.8]	3.50 [88.9]	1.63 [41.4]	8.50 [215.9]	7.38 [187.5]	8.00 [203.2]	6.50 [165.1]
KB651	3.88 [98.6]	2.38 [60.5]	4.13 [104.9]	1.50 [38.1]	8.50 [215.9]	7.38 [187.5]	8.00 [203.2]	6.50 [165.1]
KB800▲	3.38 [85.9]	1.75 [44.5]	3.38 [85.9]	1.63 [41.4]	10.50 [266.7]	9.38 [238.3]	10.00 [254.0]	8.00 [203.2]
KB802	See above.	See above.	See above.	See above.	See above.	9.38 [238.3]	10.00 [254.0]	8.00 [203.2]
KB900	4.50 [114.3]	2.25 [57.2]	4.25 [108.0]	2.25 [57.2]	11.50 [292.1]	10.38 [263.7]	11.00 [279.4]	9.00 [228.6]
KB1000	4.75 [120.7]	2.50 [63.5]	4.63 [117.6]	2.25 [57.2]	12.50 [317.5]	11.38 [289.1]	12.00 [304.8]	10.00 [254.0]

Dimensions, inches [mm], are for reference only and subject to change.

TECHNICAL DATA*

Model (B&S)	Normally In Stock	CFM@ 0" S.P.	RPM Nominal	Amps		Watts	Weight	
				Run	L.R.		Lbs.	Kg.
KB650▲	Yes	210	1600	0.35	0.4	30	4	1.8
KB651	Yes	350	3000	1.30	1.2	74	5	2.3
KB800▲	Yes	400	1500	0.70	2.3	55	4	1.8
KB802	Yes	840	3100	1.90	3.1	225	7	3.2
KB900	Yes	560	1600	1.60	2.3	100	6	2.7
KB1000	Yes	750	1550	1.50	2.3	105	7	3.2

*115V, 60 Hz. operation

HOW TO ORDER

Specify model number, adding suffix B or S. Example: KB650S. For 230 VAC operation, add a 2 after the K. Example: K2B650S. ▲**NOTE:** Some models (KB650 and KB800) unavailable in 230 VAC or minimum purchases may apply. Contact Kooltronic for availability of 230 VAC models.

THIN FANS

ACCESSORIES FOR THIN FANS



FILTERS: All KOOLTRONIC filters consist of a multi-layer grid of sturdy corrugated aluminum, securely held in a one-piece aluminum frame. Filters are required wherever air is drawn into an electronics enclosure. A non-drying adhesive coating traps a high percentage of particulate matter. These filters are reuseable, they may be washed and recoated with the appropriate filter recoating adhesive. Replacements are available for those which become damaged or otherwise non-serviceable. See next page for dimensions.



FILTER HOLDERS: Separate models are available for easy internal or external filter mounting.

FILTER RECOATING ADHESIVE: This compound is a superior product for recoating filters after washing. The adhesives penetrate dirt layers to keep the filter surface tacky for longer effective performance between washings. Part No. A-16 - 10 ounce container.

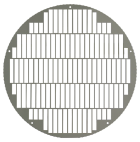

GRILLE: Designed to provide flush-mounted, protective guarding. These painted, expanded metal grilles fit neatly over the blade side of S Series fans without adding depth. Used with mounting sleeves, they can provide an alternative to wire guards.



GUARD: Made of heavy-gauge corrosion-protected wire, these guards comply with OSHA and UL safety standards. Individual guards fully protect both blade and motor sides of all B Series fans, except models KB802B. In order to adequately protect the motor side of these and all S Series fans, a mounting sleeve is needed with the guard, to accommodate the fan's greater depth.



MOUNTING SLEEVE: Extends the fan's mounting flange, as needed for some installations, such as mounting the B Series fans on the outside of the cabinet. May also be used for guard attachment (see Guard), or with a grille to provide guarding. Made of sturdy formed and welded steel and painted to match the fan.

SPECIAL EXTERNAL PAINT FINISHES*

SPECIAL LINE CORD OR CONNECTORS*

***Contact KOOLTRONIC for information.**

KOOLTRONIC also designs and manufactures a variety of Fans to meet *unique* specifications. We invite your inquiries about our modification and custom-design capabilities.

TYPICAL ACCESSORY COMBINATIONS AND MOUNTING ORIENTATIONS

Arrows show direction of airflow. Boxes represent electronics/electrical enclosures, side view.

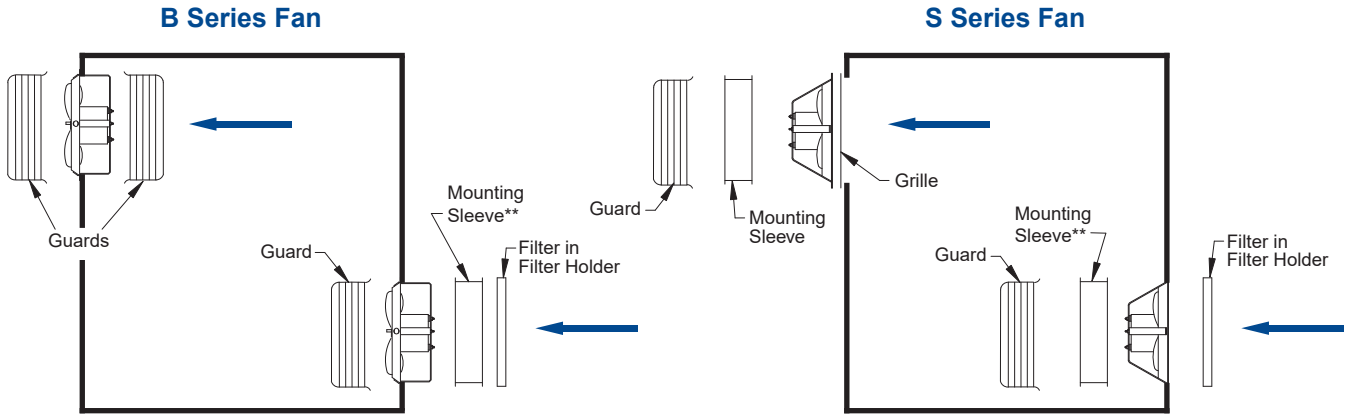

Upper fans exhaust cabinet. Lower fans pressurize cabinet. (Note that intake air is filtered.)

****B and S Series Fans when mounted in intake orientation may require an additional Mounting Sleeve. See chart below.**

	Number of Mounting Sleeves Required											
Protection to be mounted	KB650B	KB650S	KB651B	KB651S	KB800B	KB800S	KB802B	KB802S	KB900B	KB900S	KB1000B	KB1000S
Guard (motor side)	0	1	0	1	0	1	1	2	0	1	0	1
Guard (blade side)	0	0	0	0	0	0	0	0	0	0	0	0
Grille/Filter Holder (motor side)	2	3	2	3	2	3	2	4	1	2	2	2
Grille/Filter Holder (blade side)	1	0	1	0	1	0	2	0	1	0	1	0

MODEL NUMBER AND DIMENSIONS FOR THIN FAN ACCESSORIES

ACCESSORY / FAN MODEL (B or S):	KB650/651	KB800/802	KB900	KB1000
Filter Size (0.50″ [12.7mm] thick)8.38 x 8.38	**650F** 10.38 x 10.38 [212.9mm x 212.9mm]	**800F** 11.38 x 11.38 [263.7mm x 263.7mm]	**900F** 12.38 x 12.38 [289.1mm x 289.1mm]	**1000F** [314.5mm x 314.5mm]
External Filter Holder (See dimensions below)	**650H**	**800H**	**900H**	**1000H**
Internal Filter Holder (See dimensions below)	**650HF**	**800HF**	**900HF**	**1000HF**
Grille Diameter	**650X** 8.50 [215.9mm]	**800X** 10.50 [266.7mm]	**900X** 11.50 [292.1mm]	**1000X** 12.50 [317.5mm]
Guard Diameter x Depth	**655G** 7.56 x 2.63 [192.0mm x 66.8mm]	**805G** 9.63 x 2.31 [244.6mm x 58.7mm]	**905G** 10.69 x 2.63 [271.5mm x 66.8mm]	**1005G** 11.63 x 2.63 [295.4mm x 66.8mm]
Mounting Sleeve (See dimensions below)	**650M**	**800M**	**900M**	**1000M**

All B Series fans using the filter holder, filter and grille combination must use mounting sleeve.

Dimensions, inches [mm], are for reference only and are subject to change.

DIMENSIONS (inches[mm])

INTERNAL FILTER HOLDER

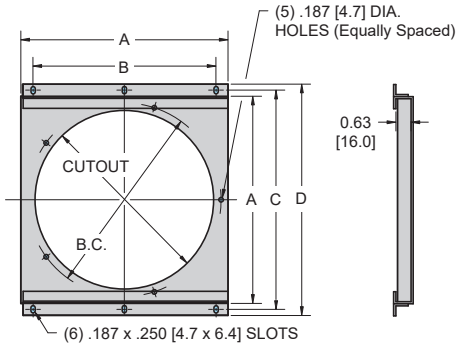

EXTERNAL FILTER HOLDER

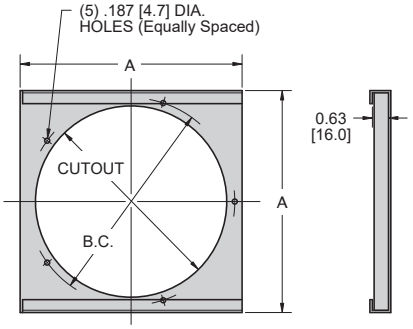

MOUNTING SLEEVE

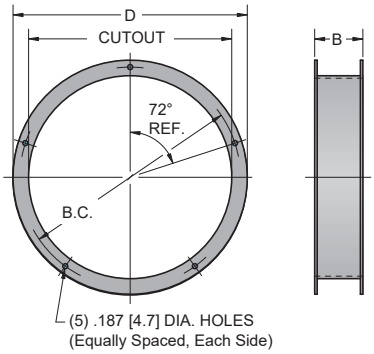

INTERNAL FILTER HOLDER (inches[mm])

Model	A	B	C	D	Mounting Cutout	Mounting B.C.
650HF	8.56 [217.4]	7.56 [192.0]	9.19 [233.4]	9.56 [242.8]	7.38 [187.5]	8.00 [203.2]
800HF	10.56 [268.2]	9.56 [242.8]	11.19 [284.2]	11.56 [293.6]	9.38 [238.3]	10.00 [254.0]
900HF	11.56 [293.6]	10.56 [268.2]	12.19 [309.6]	12.56 [319.0]	10.38 [263.7]	11.00 [279.4]
1000HF	12.56 [319.0]	11.56 [293.6]	13.19 [335.0]	13.56 [344.4]	11.38 [289.1]	12.00 [304.8]

Dimensions, inches [mm], are for reference only and are subject to change.

EXTERNAL FILTER HOLDER (inches[mm])

Model	A	Mounting Cutout	Mounting B.C.
650H	8.56 [217.4]	7.38 [187.5]	8.00 [203.2]
800H	10.56 [268.2]	9.38 [238.3]	10.00 [254.0]
900H	11.56 [293.6]	10.38 [263.7]	11.00 [279.4]
1000H	12.56 [319.0]	11.38 [289.1]	12.00 [304.8]

Dimensions, inches [mm], are for reference only and are subject to change.

MOUNTING SLEEVE (inches[mm])

Model	B	D	Mounting Cutout	Mounting B.C.
650M	1.75 [44.5]	8.50 [215.9]	7.38 [187.5]	8.00 [203.2]
800M	1.75 [44.5]	10.50 [266.7]	9.38 [238.3]	10.00 [254.0]
900M	2.38 [60.5]	11.50 [292.1]	10.25 [260.4]	11.00 [279.4]
1000M	2.38 [60.5]	12.50 [317.5]	11.38 [289.1]	12.00 [304.8]

Dimensions, inches [mm], are for reference only and are subject to change.

HOW TO ORDER

Specify model number.

KOOLTRAY II

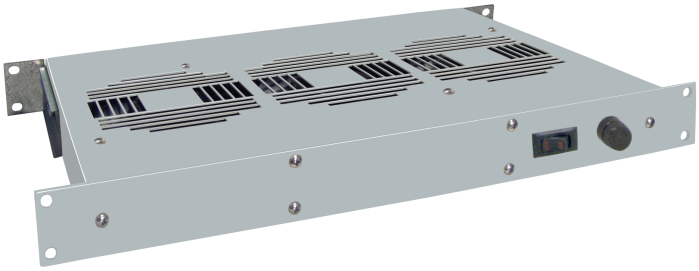

DESCRIPTION

Standard KoolTray II

The KOOLTRONIC ***KoolTray II*** delivers cooling air to hot spots by localizing fan placement to the heat generating area(s). With its 1¾-inch [44.5mm] single-U height it fits right under card racks or near heat-producing sources. Standard units are available in 1, 2, or 3 row models. 19-inch [482.6mm] unit width is standard.

Smart KoolTray II

In addition to specific cooling fan placement, the ***Smart KoolTray II*** provides two optional choices of component protection. The **X5** option sends both a visual and external alarm in the event of fan failure or low fan speed. The **X7** option varies the fan speed as temperature decreases or increases relative to the set point and sends an alarm for high temperature conditions. The **X6** option combines both the **X5** and **X7** options.

Filtered KoolTray II

For environments which require filtration of the ambient or cabinet air, KOOLTRONIC's ***Filtered KoolTray 2*** filters the air from the bottom side of the tray. Other filter location options are available. Filtered versions are available on both the ***Standard*** and ***Smart KoolTray II.***

CALL 1-800-321-KOOL (5665)
or FAX 609-466-1114

STANDARD FEATURES

- 19-inch width in single U height (1¾")
- 6-foot power supply cord for DC versions
- 6-foot power cord with molded plug for AC versions
- Baked Powder Finish
- Integral OSHA/UL finger guards
- Low sound level
- On/off switch and fuse are accessible from faceplate
- Powered by 12, 24, or 48 VDC (brushless) or 115 or 230 VAC (50 & 60 Hz)
- Rugged heavy-duty Steel Construction
- Static pressure up to .34" of water
- UL/CSA/VDE/TUV ball bearing motors rated for -20°C to 70°C
- Up to 105 CFM per fan

ACCESSORIES AND OPTIONS

	Page
Brushed aluminum faceplate	✦
Custom painted faceplate	✦
Fan failure external alarm	157
Filtered Kooltray	✦
High Temperature external alarm	157
Longer cord lengths up to 10 feet	✦
Rear mounted IEC receptacle instead of power cord▲	✦
Rear mounted terminal block instead of power cord	✦
Stainless steel faceplate	✦
X5, X6 and X7 options	157

✦ Contact KOOLTRONIC for information.
▲ VAC units only.

KOOLTRAY II MODEL NUMBER AND FEATURE SELECTION GUIDE

KT

KT = 115 VAC, 50/60 Hz
K2T = 230 VAC, 50/60 Hz
K6T = 12 VDC Brushless
K7T = 24 VDC Brushless
K8T = 48 VDC Brushless

1

1 = 3 fans (one row)
2 = 6 fans (two rows)
3 = 9 fans (three rows)

F

Filtered KoolTray

X1

X1 = Standard KoolTray
X5 = Smart KoolTray with single speed fans
X6 = Smart KoolTray with temperature sensitive variable speed fans
X7 = Standard KoolTray with temperature sensitive variable speed fans

00

00 = With rear exit power cord
01 = Externally rear-mounted terminal block for power instead of power cord
02 = IEC 60320 C-14 rear mounted power receptacle instead of power cord

For assistance in model selection, refer to the Blower & Fan Selection Guides on pages 10 and 142, call KOOLTRONIC, or use one of our FREE design aid software programs.

DIMENSIONS inches [mm]

1 ROW

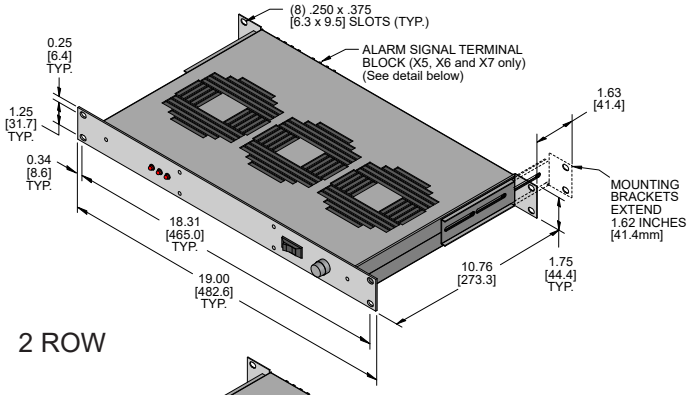

2 ROW

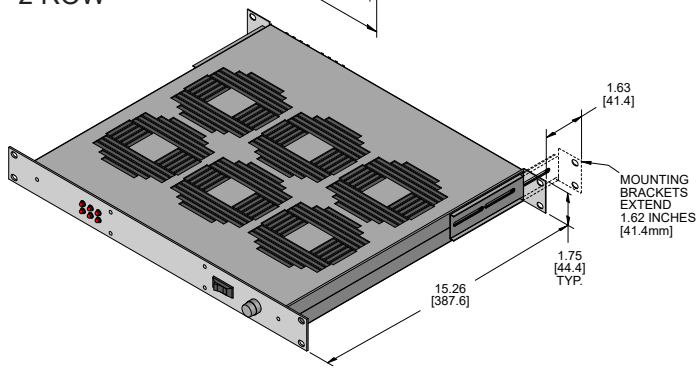

3 ROW

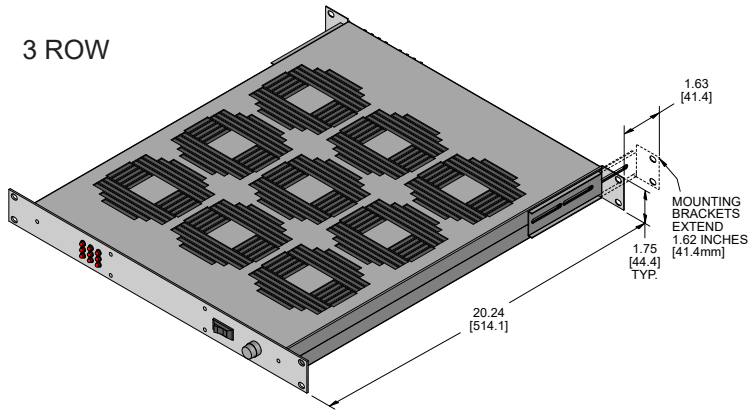

OPTIONS FOR SMART KOOLTRAY II

The **X5** option provides both a visual and external alarm for fan failure or low fan speed. The visual alarm is provided by L.E.D's corresponding to individual fans. The external alarm is provided by relay contact connection on the rear mounted terminal block for a remote warning device.

For **X7** option provides variable speed fan control based on temperature (40ºC setpoint). High temperature alarm relay contacts are provided by way of a rear mounted terminal block for a remote warning device.

The **X6** option incorporates both the X5 and X7 options.

OPTIONS:	**X5**	**X6**	**X7**
Individual Fan Sensors	x	x	
Variable Speed Fans		x	x
AC		x	x
DC	x	x	x
Alarm Types			
Low Fan Speed/Fan Failure	x	x	
High Temperature		x	x

HOW TO ORDER

Specify model number. See previous page for Model Number and Features Selection Guide.

Alarm Signal Terminal Block Detail (X5, X6 and X7 options only)

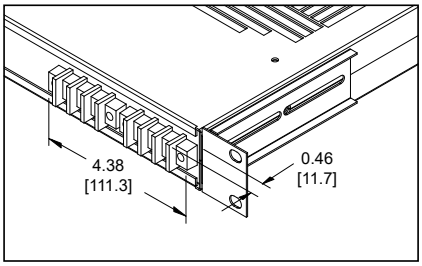

02 - IEC Power Option Detail

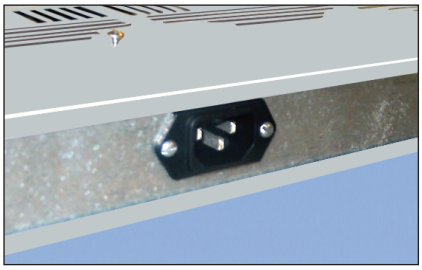

TECHNICAL DATA*

# Fans	CFM@ 0" S.P.	RPM Nominal	Amps Run.	Amps L.R.	Watts	Approx. Weight Lbs.	Approx. Weight Kg.
3	315	3050	0.5	0.8	40	11	5.0
6	630	3050	1.0	1.6	80	16	7.3
9	945	3050	1.5	2.4	120	21	9.5

* 115V, 60 Hz. operation

PACKAGED FANS



DESCRIPTION

TWIN AND TRIPLE FANS: In low static pressure applications, these fans provide high airflow in a very thin package. An exclusive KOOLTRONIC design provides exceptionally quiet operation in both intake and exhaust applications. Whether mounted horizontally or vertically, these minimum vibration fans require little internal cabinet space, leaving virtually the entire cabinet free for power supplies or other components. Both the KP500 (Twin) and KP875 (Triple) fans fit standard 19" equipment racks.

FILTER BOX FANS: High airflow with low noise operation makes these versatile packaged fans very popular in a wide range of applications, especially with their minimal internal cabinet depth requirement.

Reversible designs allow user to push or pull air through the enclosure. In addition, these fans can be installed internally or externally, vertically or horizontally, with or without a filter on either side. With the KOOLTRONIC special motor mount isolation system, these fans operate virtually vibration-free. Front and rear grilles can be adjusted to accommodate or omit filter. Filters are easily removable for cleaning and replacement.

See the following page for the four available mounting configurations of these easy-to-use fans.

General specifications common to all KOOLTRONIC Fans are on the first page of this section.

CALL 1-800-321-KOOL (5665)
or FAX 609-466-1114

STANDARD FEATURES

- All models can pressurize or exhaust
- Attractive Stainless Steel Grilles
- Capacities: 105 to 995 CFM
- Exceptionally quiet
- Filter
- Rugged Construction with Baked Powder Finish
- Twin, triple and filter box models
- UL/CSA ball-bearing motors
- Versatile mounting and adaptability

ACCESSORIES AND OPTIONS

	Page
All Packaged Fans	
■ Automatic Speed Control	147
■ Filters	159
■ Filter Recoating Adhesive	154
■ Special external paint finishes	✦
■ Special line cord or connectors	✦
KP40, KP60 and KP100	
■ Brushless DC motors	✦
■ Filters	160
KP500 and KP875	
■ Adapters	159
■ Grille Assemblies	159

✦ Contact KOOLTRONIC for information.

PERFORMANCE GRAPHS

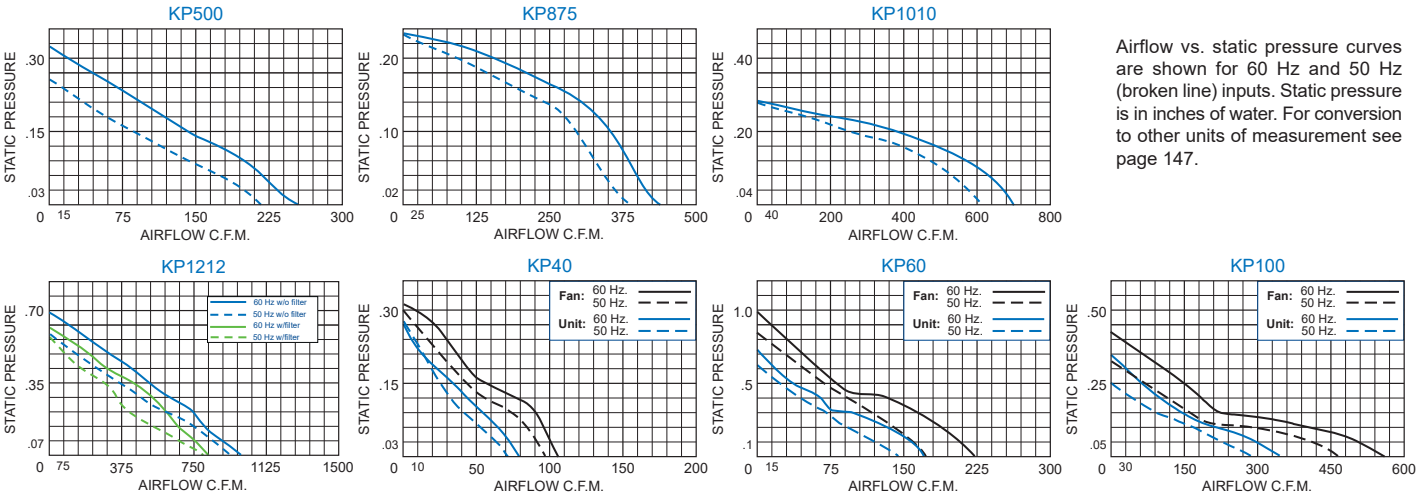

Airflow vs. static pressure curves are shown for 60 Hz and 50 Hz (broken line) inputs. Static pressure is in inches of water. For conversion to other units of measurement see page 147.

For assistance in model selection, refer to the Blower & Fan Selection Guides on pages 10 and 142, call KOOLTRONIC, or use one of our FREE design aid software programs.

DIMENSIONS inches [mm]

KP500 and KP875

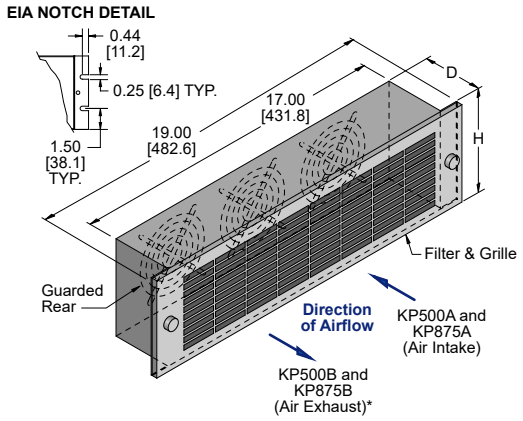

*For exhaust applications, filter may be removed and used at air intake.

Model	Discharge Available	Height (H)	Depth (D)
KP500	A B	5.25 [133.4]	3.50 [88.9]
KP875	A B	8.75 [222.3]	4.25 [108.0]

See "Additional Specifications" below for other dimensional data. Dimensions, inches [mm], are for reference only and subject to change.

KP1010 and KP1212

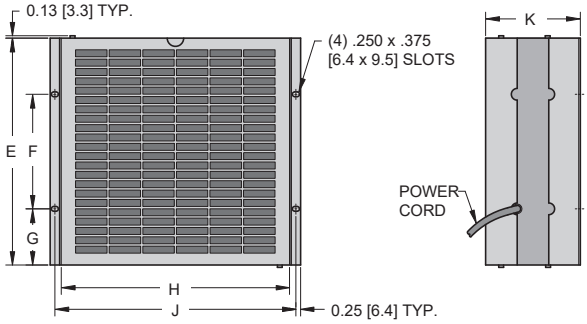

Model	Configurations*	E	F	G
KP1010	A B C D	12.12 [307.8]	6.12 [155.4]	3.00 [76.2]
KP1212	A B C D	15.12 [384.0]	9.00 [228.6]	3.06 [77.7]

Model	H	J	K A&B*	K C&D*
KP1010	12.18 [309.4]	12.87 [326.9]	5.06 [128.5]	4.50 [114.3]
KP1212**	15.18 [385.6]	15.87 [403.1]	6.68 [169.7]	6.12 [155.4]

* See Configurations diagram below.

** NOTE: KP1212 unavailable in 230 VAC.

NOTE: Models KP875, KP1010 and KP1212 Fans feature neoprene vibration isolation mounts. Not required on KP500.

Dimensions, inches [mm], are for reference only and subject to change.

FILTER PART NUMBERS

Model	Filter P/N
KP500	5251F-2
KP875	8751F
KP1010	10101F
KP1212	12121F

HOW TO ORDER

KP500 and KP875: Specify model number, adding discharge suffix A (intake) or B (exhaust). Example: KP875A.

KP1010 and KP1212: Specify model number, adding configuration suffix (A,B,C or D). Example: KP1212B. NOTE: KP1212 unavailable in 230 VAC.

For 230 VAC operation, add a 2 after the K. Examples: K2P875A; K2P1212B.

FILTER BOX FANS: CONFIGURATIONS

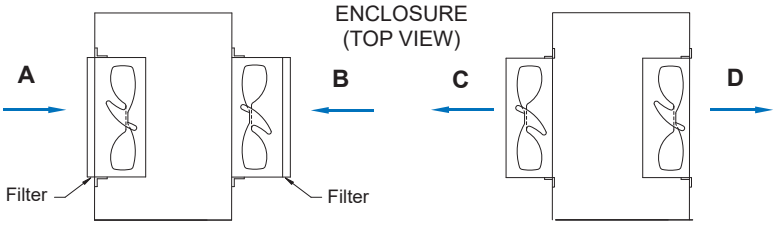

Arrows show direction of airflow.

A and B - used to pressurize the enclosure. C and D - used to exhaust the enclosure.

TECHNICAL DATA*

Model	Normally In Stock	CFM @ 0-inches	RPM Nominal	Amps Run.	Amps L.R.	Watts	Approx. Weight Lbs.	Approx. Weight Kg.
KP500	Yes	200	3000	0.6	0.9	55	9	4.1
KP875	Yes	420	1500	1.2	1.5	98	12	5.5
KP1010	Yes	640	1525	1.5	2.2	111	15	6.8
KP1212	Yes	825	1700	1.4	2.9	130	25	11.4

* 115V, 60 Hz. operation; A & B configuration for KP1010 & KP1212.

ADDITIONAL SPECIFICATIONS

ENCLOSURES: Precision-engineered baked powder coated heavy-gauge steel construction. ***KP500*** and ***KP875:*** 17 inches [431.8mm] wide. EIA-Notched flanges extend 17-inch [431.8mm] blower enclosure to 19-inch [482.6mm] panel width. ***Filter Box Fans:*** see dimensional data on the following page for sizes.

POWER CORD: 115V, 60 Hz. models of KP500, KP875, KP1010 and KP1212 include a 3-foot [0.9m] (minimum) three-wire cord with molded plug, internally grounded and securely locked to case by strain relief bushing. 230 VAC, 50/60 Hz units are supplied without plugs. Models KP40, KP60 and KP100 include 12-inch power cords without plug.

GRILLE/GUARD: KP40, KP60, KP100, KP500 and KP875 each include a rear guard and an attractive stainless steel grille with knurled captive fasteners for easy removal. KP1010 and KP1212 include attractive stainless steel grilles on both front and rear. Grilles and guards comply with OSHA and UL safety standards.

FILTER: Furnished with each packaged fan.

PACKAGED FANS (cont.)

DIMENSIONS (inches [mm])

FAN ASSEMBLY

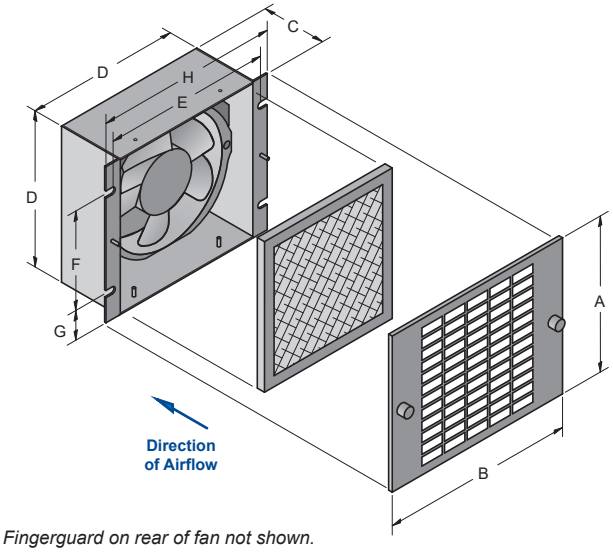

Fingerguard on rear of fan not shown.

Model	A		B		C		D		E		F		G		H	
KP40	6.12	[155.4]	7.37	[187.2]	2.37	[60.2]	5.62	[142.7]	6.37	[161.8]	4.12	[104.6]	0.75	[19.1]	7.00	[177.8]
KP60	7.62	[193.5]	8.87	[225.2]	3.00	[76.2]	7.12	[180.8]	7.87	[199.9]	4.50	[114.3]	1.31	[33.3]	8.50	[215.9]
KP100	11.62	[295.1]	13.00	[330.2]	4.56	[115.8]	11.12	[282.4]	11.87	[301.4]	6.87	[174.5]	2.12	[53.8]	12.50	[317.5]

Dimensions, inches [mm], are for reference only and are subject to change.

FILTER - GRILLE ASSEMBLY

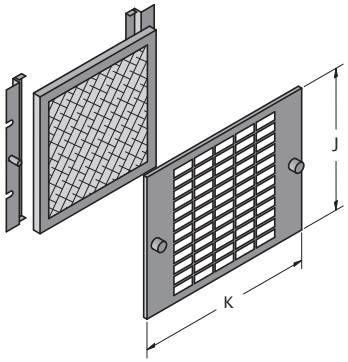

Model	J		K	
KFG40	6.13	[155.7]	7.38	[187.5]
KFG60	7.63	[193.8]	8.88	[225.6]
KFG100	11.63	[295.4]	13.00	[330.2]

Dimensions, inches [mm], are for reference only and are subject to change.

FILTER PART NUMBERS

Model	Filter P/N
KP40	531F
KP60	681F
KP100	1081F

HOW TO ORDER

Specify model number.

TECHNICAL DATA*

Model	Normally In Stock	Volts	CFM @ 0" S.P. Fan Only	RPM Nominal	Amps Run.	Amps L.R.	Watts	Approx. Weight Lbs.	Approx. Weight Kg.
KP40	Yes	115	105	3000	0.18	0.33	15	3	1.5
K2P40		230	105	3000	0.09	0.13	15	3	1.5
KP60	Yes	115	220	3300	0.29	0.53	33	4	1.8
K2P60		230	220	3300	0.15	0.27	33	4	1.8
KP100	Yes	115	550	1600	0.49	1.30	60	10	4.5
K2P100		230	550	1600	0.45	0.60	60	10	4.5

* 60 Hz. operation.

See “Additional Specifications” on previous page for more information.

ADVANTAGE SERIES KBFF FILTER FANS

DESCRIPTION

In response to industry demands for small, versatile cooling units, Kooltronic now offers the ***Advantage Series Filter Fans***. Unique to the series is a clean, linear design, characterized by its extremely flat profile, which keeps the unit from protruding from the cabinet wall.

The ***Advantage Series Filter Fans*** offer convenience, versatility and reliability:

Fast Mounting: With elastic hooks and an integrated seal, the ***Advantage Series Filter Fans*** can be mounted easily into the opening provided on the panel. There is no need for extra screws or preparation.

Wide Range of Mounting Dimensions: The precise planning of the elastic hooks and gaskets allow the fans to be mounted in openings with a tolerance range of 0.059 inches [1.5mm] and a plate thickness of between 0.039 inches [1.0mm] and 0.098 inches [2.5 mm].

General specifications common to all KOOLTRONIC Fans are on the first page of this section.

KOOLTRONIC also designs and manufactures a variety of fans to meet *unique* specifications. We invite your inquiries about our modification and custom-design capabilities.

CALL 1-800-321-KOOL (5665)
or FAX 609-466-1114



NEMA
TYPE 12
MAINTAINED

STANDARD FEATURES

- Mounts quickly and easily
- Attractive appearance
- Requires no mounting hardware
- Integral Finger-Guards
- Most assemblies are CE Approved
- Type 12 Maintained (if used with provided filter)
- UL shielded ball-bearing motors
- Integrated sealing gasket
- Washable Theremolinked Progressive Structure
- Electrical Connection: See individual units

ACCESSORIES AND OPTIONS

	Page
■ Grill Color: RAL 9005, Black	✦
■ Grill Assemblies	178
■ Replacement Filters	✦
■ Reversed airflow direction	✦

✦ Contact KOOLTRONIC for information.



KBFF08
29.43 CFM*
4"H x 4"W x 3"D



KBFF12
46.5 CFM*
6"H x 6"W x 3"D

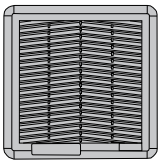

KBFF13
76.5 CFM*
8"H x 8"W x 4"D

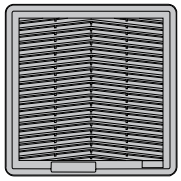

KBFF15
158.9 CFM*
10"H x 10"W x 5"D

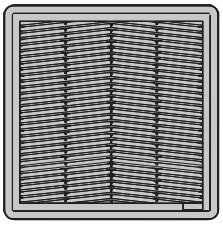

KBFF20
341.4 CFM*
13"H x 13"W x 6"D

* Fan with grille airflow.

ADVANTAGE SERIES FILTER FANS
KBFF08 MODELS

TECHNICAL DATA

Model	Normally In Stock	Voltage	Frequency Hz	Input mA	Input Watts	Max. Airflow CFM*	Static Pressure INCH. W.	Noise db(A)	Operating Temp. ºF		Approx. Weight		Agency Approvals
									Min.	Max	Lbs.	Kg.	
KBFF08GAUF	Yes	115 VAC	50/60	0.145/0.127	12/10	13/15	0.16/0.23	37/42	14	131	1.19	0.54	1, 2, 5
K2BFF08GAUF	Yes	230 VAC	50/60	0.078/0.068	12/11	13/15	0.16/0.23	37/42	14	131	1.19	0.54	1, 2, 5

* Fan with grille airflow.
RAL 7035 (Light Grey) is standard color (designated by U in the model number). Fans are also available in RAL 9005 (Black). To order Black fan, substitute N for U in model number. Example: KBFF08GDUN for RAL 7035 (Light Grey) and KBFF08GDNN for RAL9005 (Black).

APPROVALS: 1. NEMA TYPE 12 MAINTAINED 2. CE 3. 4. 5. c UL us



KBFF08GAUF

STANDARD FEATURES

- Mounts quickly and easily
- Attractive Appearance
- Requires no Mounting Hardware
- Integral Finger-Guards
- Most assemblies are CE Approved
- Type 12 Rating Maintained (if used with provided filter)
- UL Shielded Ball-Bearing Motors
- Integrated Sealing Gasket
- Washable Theremolinked Progressive Structure
- Electrical Connection: 12 inch leads.

ACCESSORIES AND OPTIONS

	Page
■ Grille Color: Ral 9005, Black	✦
■ Replacement Filters (P/N: KFM08)	✦
■ Grill Assembly (P/N: KBFA08U)	178
■ Reversed Airflow Direction	✦

✦ Contact KOOLTRONIC for information.

HOW TO ORDER

Specify model number.

PERFORMANCE CHART

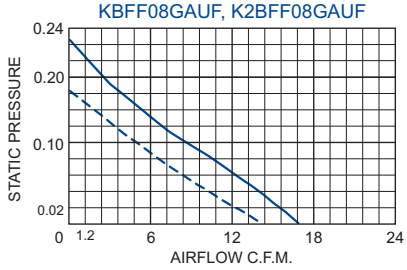

Airflow vs. static pressure curves for 115VAC and 230VAC models are shown for 60 Hz (solid line) and 50 Hz (broken line) inputs. Static pressure is in inches of water.

DRAWINGS (KBFF08GAUF)

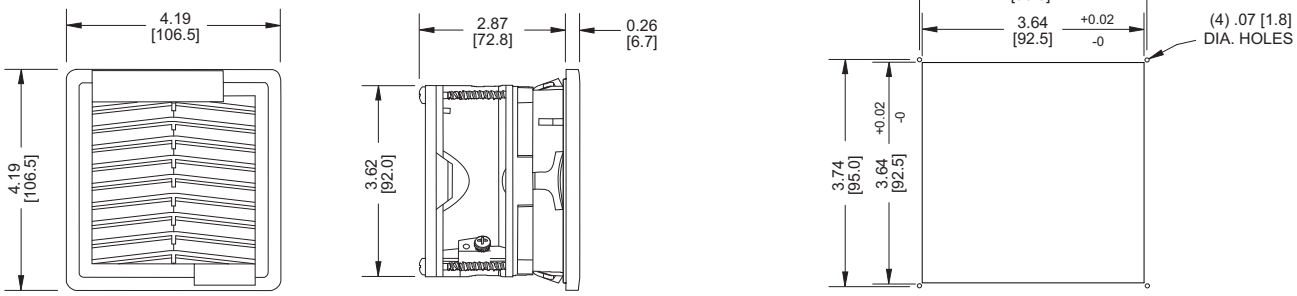

MOUNTING PLAN

Dimensions, inches [mm], are for reference only and are subject to change.

ADVANTAGE SERIES FILTER FANS
KBFF12 MODELS

TECHNICAL DATA

Model	Normally In Stock	Voltage	Frequency Hz	Input mA	Input Watts	Max. Airflow CFM*	Static Pressure INCH. W.	Noise db(A)	Operating Temp. ºF Min.	Operating Temp. ºF Max	Approx. Weight Lbs.	Approx. Weight Kg.	Agency Approvals
KBFF12AUN	Yes	115 VAC	50/60	.252/.220	19/17	35.4/46.5	.29/.35	40/44	14	131	1.8	0.8	1, 2, 5
K2BFF12AUN	Yes	230 VAC	50/60	.130/.100	18/16	35.4/46.5	.29/.35	40/44	14	131	1.8	0.8	1, 2, 5
K7BFF12DUN		24 VDC	-	.310	7.4	27.7	.22	42.5	14	131	1.1	0.5	1, 2, 5
K8BFF12DUN		48 VDC	-	.180	8.6	27.7	.22	42.5	14	131	1.1	0.5	1, 2, 5

* Fan with grille airflow.
RAL 7035 (Light Grey) is standard color (designated by U in the model number). Fans are also available in RAL 9005 (Black). To order Black fan, substitute N for U in model number. Example: KBFF12AUN for RAL 7035 (Light Grey) and KBFF12ANN for RAL 9005 (Black).

APPROVALS: 1. NEMA TYPE 12 MAINTAINED 2. CE 3. CSA 4. UL 5. cULus

STANDARD FEATURES

- Mounts Quickly and Easily
- Attractive Appearance
- Requires no Mounting Hardware
- Integral Finger-Guards
- Most Assemblies are CE Approved
- Type 12 Rating Maintained (if used with provided filter)
- UL Shielded Ball Bearing Motors
- Integrated Sealing Gasket
- Washable Thermolinked Progressive Structure Synthetic Filter
- Electrical Connection: 115 & 230V - Terminal block 2 poles L-N; 24 VDC & 48 VDC - UL 1007 AGW24 lead wires

ACCESSORIES AND OPTIONS

	Page
Grille Color: Ral 9005, Black	✦
Replacement Filters (P/N: KFM12)	✦
Grill Assembly (P/N: KBFA12U)	178
Reversed Airflow Direction	✦

✦ Contact KOOLTRONIC for information.



KBFF12AUN

HOW TO ORDER

Specify model number.

PERFORMANCE CHARTS

KBFF12AUN, K2BFF12AUN

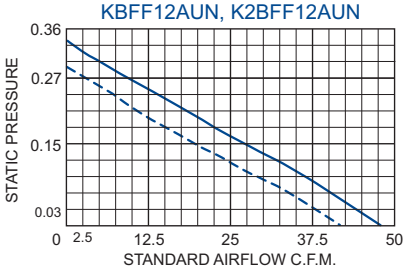

KBFF12AUNR, K2BFF12AUNR

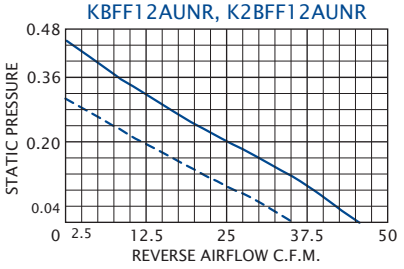

Airflow vs. static pressure curves for 115VAC and 230VAC models are shown for 60 Hz (solid line) and 50 Hz (broken line) inputs. Static pressure is in inches of water.

DRAWINGS (KBFF12AUN)

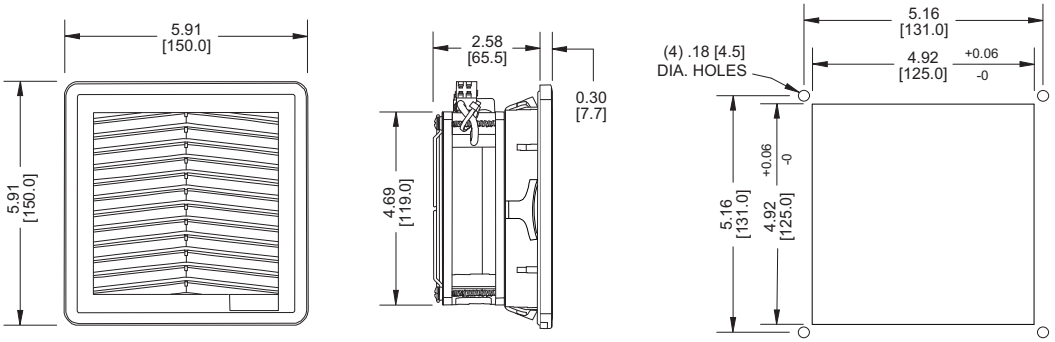

MOUNTING PLAN

Dimensions, inches [mm], are for reference only and are subject to change.

ADVANTAGE FILTER FANS

ADVANTAGE SERIES FILTER FANS
KBFF13 MODELS

TECHNICAL DATA

Model	Normally In Stock	Voltage	Frequency Hz	Input mA	Input Watts	Max. Airflow CFM*	Static Pressure INCH. W.	Noise db(A)	Operating Temp. ºF Min.	Operating Temp. ºF Max	Approx. Weight Lbs.	Approx. Weight Kg.	Agency Approvals
KBFF13PAUF	Yes	115 VAC	50/60	.213/.202	19/18	58.8/64.7	.22/.24	46/49	14	131	2.6	1.2	1, 2, 5
K2BFF13PAUF	Yes	230 VAC	50/60	.106/.100	18/18	58.8/64.7	.22/.24	48/54	14	131	2.6	1.2	1, 2, 5
KBFF13PAUN		115 VAC	50/60	.200/.180	16/15	64.7/76.5	.32/.40	40/44	14	131	2.6	1.2	1, 2, 5
K2BFF13PAUN		230 VAC	50/60	.126/.110	19/17	64.7/76.5	.32/.40	40/44	14	131	2.6	1.2	1, 2, 5
K7BFF13PDUN		24 VDC	-	.342	8.2	58.8	.24	42	14	131	1.9	0.9	1, 2, 5

* Fan with grille airflow.
RAL 7035 (Light Grey) is standard color (designated by U in the model number). Fans are also available in RAL 9005 (Black). To order Black fan, substitute N for U in model number. Example: KBFF13PAUF for RAL 7035 (Light Grey) and KBFF13PANF for RAL9005 (Black).

APPROVALS: 1. NEMA TYPE 12 MAINTAINED 2. CE 3. CSA 4. UL 5. cULus



KBFF13PAUF

STANDARD FEATURES

- Mounts Quickly and Easily
- Attractive Appearance
- Requires no Mounting Hardware
- Integral Finger-Guards
- Most Assemblies are CE Approved
- Type 12 Rating Maintained (if used with provided filter)
- UL Shielded Ball Bearing Motors
- Integrated Sealing Gasket
- Washable Thermolinked Progressive Structure Synthetic Filter
- Electrical Connection: 115 & 230V - Terminal Block, 2 poles L-N; 24 VDC - Terminal block 2 poles plus and minus

ACCESSORIES AND OPTIONS

	Page
Grille Color: Ral 9005, Black	✦
Replacement Filters (P/N: KFM13)	✦
Grill Assembly (P/N: KBFA21U)	178
Reversed Airflow Direction	✦

✦ Contact KOOLTRONIC for information.

HOW TO ORDER

Specify model number.

PERFORMANCE CHARTS

KBFF13PAUF, K2BFF13PAUF

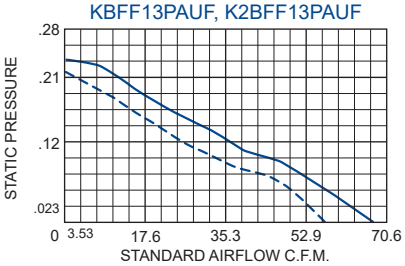

KBFF13PAUN, K2BFF13PAUN

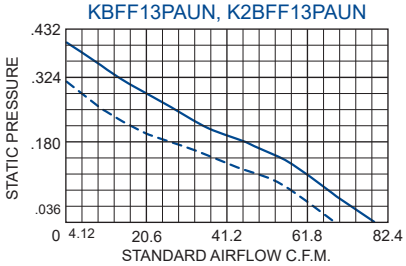

K7BFF13PDUN

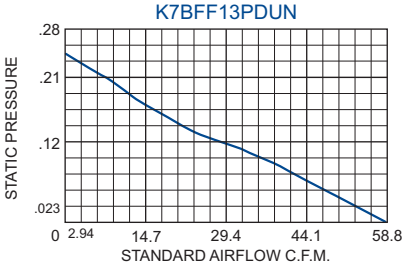

Airflow vs. static pressure curves for 115VAC and 230VAC models are shown for 60 Hz (solid line) and 50 Hz (broken line) inputs. Static pressure is in inches of water.

Static pressure is in inches of water.

DRAWINGS (KBFF13PAUF)

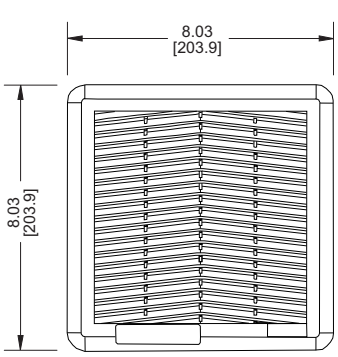

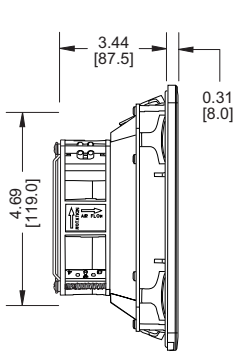

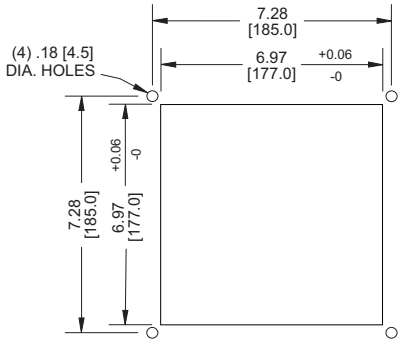

MOUNTING PLAN

Dimensions, inches [mm], are for reference only and are subject to change.

ADVANTAGE FILTER FANS

ADVANTAGE SERIES FILTER FANS
KBFF15 MODELS

TECHNICAL DATA

Model	Normally In Stock	Voltage	Frequency Hz	Input mA	Input Watts	Max. Airflow CFM*	Static Pressure INCH. W.	Noise db(A)	Operating Temp. ºF Min.	Operating Temp. ºF Max	Approx. Weight Lbs.	Approx. Weight Kg.	Agency Approvals
KBFF15AUF	Yes	115 VAC	50/60	.280/.270	31/31	135.4/158.9	.46/.62	50/55	14	131	3.3	1.5	1, 2, 5
K2BFF15AUF		230 VAC	50/60	.134/.160	32/36	134.4/158.9	.46/.62	50/55	14	131	3.3	1.5	1, 2, 5**
KBFF15PAUF		115 VAC	50/60	.210/.210	17/16	61.8/70.6	.22/.23	46/49	14	131	2.6	1.2	1, 2, 5
K2BFF15PAUF		230 VAC	50/60	.110/.100	18/17	61.8/70.6	.22/.23	48/54	14	131	2.6	1.2	1, 2, 5
K7BFF15PDUN		24 VDC	-	.320	7.6	82.4	.25	42.0	14	131	2.0	0.9	1, 2, 5
K8BFF15PDUN		48 VDC	-	.180	8.6	82.4	.25	42.5	14	131	2.0	0.9	1, 2, 5

* Fan with grille airflow.
** UL only at 60 Hz.
RAL 7035 (Light Grey) is standard color (designated by U in the model number). Fans are also available in RAL 9005 (Black). To order Black fan, substitute N for U in model number. Example: KBFF15AUF for RAL 7035 (Light Grey) and KBFF15ANF for RAL9005 (Black).

APPROVALS: 1. NEMA TYPE 12 MAINTAINED 2. CE 3. CSA 4. UL 5. cULus

STANDARD FEATURES

- Mounts Quickly and Easily
- Attractive Appearance
- Requires no Mounting Hardware
- Integral Finger-Guards
- Most Assemblies are CE Approved
- Type 12 Rating Maintained (if used with provided filter)
- UL Shielded Ball Bearing Motors
- Integrated Sealing Gasket
- Washable Thermolinked Progressive Structure Synthetic Filter
- Electrical Connection: 115 & 230 V - Terminal block 3 poles L-N-PE; 24 & 48 VDC - Terminal block 2 poles plus and minus

ACCESSORIES AND OPTIONS

	Page
Grille Color: Ral 9005, Black	✦
Replacement Filters (P/N: KFM15)	✦
Grill Assembly (P/N: KBFA21U)	178
Reversed Airflow Direction	✦

✦ Contact KOOLTRONIC for information.



KBFF15AUF

HOW TO ORDER

Specify model number.

PERFORMANCE CHARTS

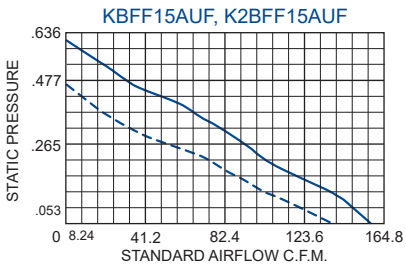

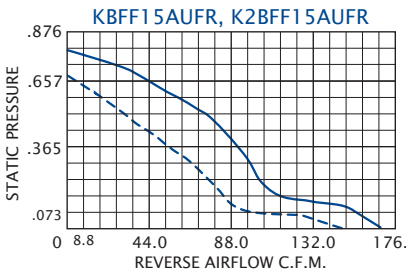

Airflow vs. static pressure curves for 115VAC and 230VAC models are shown for 60 Hz (solid line) and 50 Hz (broken line) inputs. Static pressure is in inches of water.

DRAWINGS (KBFF15AUF)

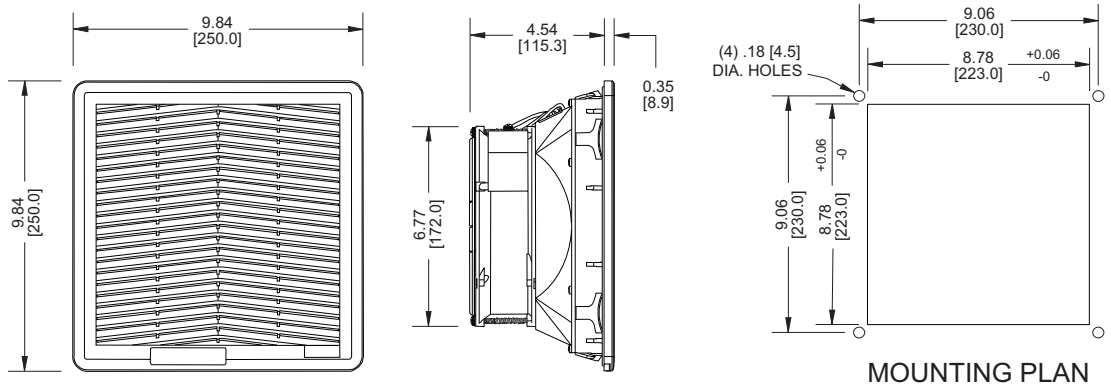

MOUNTING PLAN

Dimensions, inches [mm], are for reference only and are subject to change.

ADVANTAGE FILTER FANS

ADVANTAGE SERIES FILTER FANS
KBFF20 MODELS

TECHNICAL DATA

Model	Normally In Stock	Voltage	Frequency Hz	Input mA	Input Watts	Max. Airflow CFM*	Static Pressure INCH. W.	Noise db(A)	Operating Temp. ºF Min.	Operating Temp. ºF Max	Approx. Weight Lbs.	Approx. Weight Kg.	Agency Approvals
KBFF20AUE1	Yes	115 VAC	50/60	.68/.73	74/83	306.0/341.4	.64/.76	66.0/79.2	14	131	6.8	3.1	1, 2, 5
K2BFF20AUE1	Yes	230 VAC	50/60	.310/.350	70/85	306.0/341.4	.64/.76	65.3/68.1	14	131	6.8	3.1	1, 2, 5
K4BFF20GATU		400 VAC	50/60	.252/N.A.	169/N.A.	317.8/N.A.	.72/N.A.	69.8/72.7	14	158	6.8	3.1	1, 2

* Fan with grille airflow.
RAL 7035 (Light Grey) is standard color (designated by U in the model number). Fans are also available in RAL 9005 (Black). To order Black fan, substitute N for U in model number. Example: KBFF20AUE1 for RAL 7035 (Light Grey) and KBFF20ANE1 for RAL9005 (Black).

APPROVALS: 1. NEMA TYPE 12 MAINTAINED 2. CE 3. CSA 4. UL 5. c UL us



KBFF20AUE1

STANDARD FEATURES

- Mounts Quickly and Easily
- Attractive Appearance
- Requires no Mounting Hardware
- Integral Finger-Guards
- Most Assemblies are CE Approved
- Type 12 Rating Maintained (if used with provided filter)
- UL Shielded Ball Bearing Motors
- Integrated Sealing Gasket
- Washable Thermolinked Progressive Structure Synthetic Filter
- Electrical Connection: 115 & 230V - Terminal block 3 poles L-N-PE; 400V - Terminal block 4 poles L1-L2-L3-PE

ACCESSORIES AND OPTIONS

	Page
Grille Color: Ral 9005, Black	✦
Replacement Filters (P/N: KFM20)	✦
Grill Assembly (P/N: KBFA20U)	178
Reversed Airflow Direction	✦

✦ Contact KOOLTRONIC for information.

PERFORMANCE CHARTS

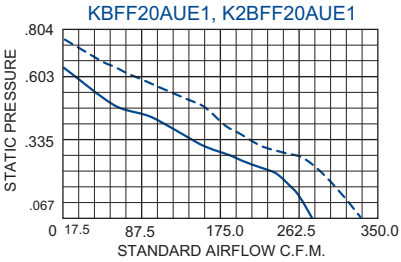

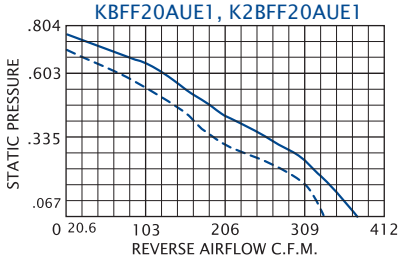

Airflow vs. static pressure curves for 115VAC and 230VAC models are shown for 60 Hz (solid line) and 50 Hz (broken line) inputs. Static pressure is in inches of water.

HOW TO ORDER

Specify model number.

DRAWINGS (KBFF20AUE1)

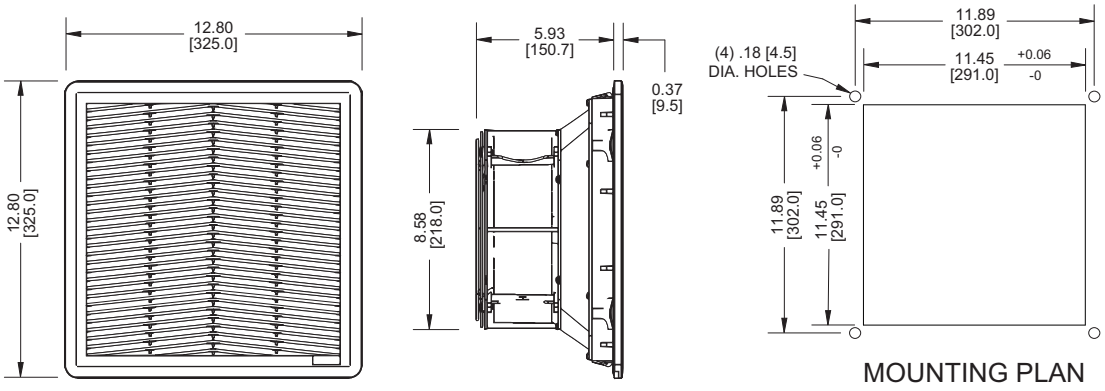

MOUNTING PLAN

Dimensions, inches [mm], are for reference only and are subject to change.

SENTRY SERIES FILTER FANS

DESCRIPTION

Kooltronic has expanded its line of filter fans to include models offering the versatility and security of indoor or outdoor use. The ***Sentry Series Filter Fans*** have a ***NEMA 3R*** Rating and are a perfect choice for dissipating high heat loads economically. These filter fans are also available in a variety of sizes, voltages and protection levels.

The ***Sentry Series Indoor/Outdoor Filter Fans*** offer the same convenience, versatility and reliability as the ***Advantage Series Filter Fans***, with the added protection of a ***NEMA 3R*** Rating, making these models an excellent choice for the food service industry, telecommunications, and other outdoor applications.

General specifications common to all KOOLTRONIC Fans are on the first page of this section.

KOOLTRONIC also designs and manufactures a variety of fans to meet *unique* specifications. We invite your inquiries about our modification and custom-design capabilities.

CALL 1-800-321-KOOL (5665)
or FAX 609-466-1114

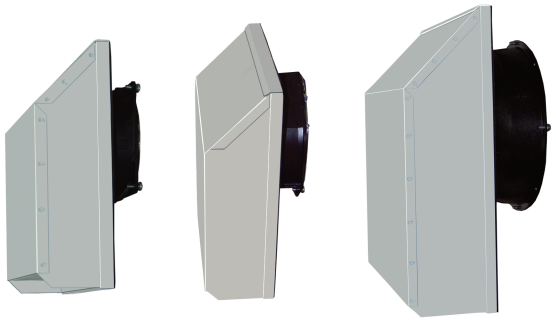

NEMA TYPE 3R MAINTAINED

Products in red are legacy products. Legacy products are no longer in normal production. Consult factory for availability.

Recommended replacement: See *Guardian/GuardianX Series 4 or 4X Filter Fans*

STANDARD FEATURES

- Baked Powder Finish
- Integrated Fan Guards
- Integrated Sealing Gasket
- Most assemblies are UL/CUL Listed
- NEMA 3R Rating Maintained (If used with provided filter)
- Secure Mounting
- UL/CSA Shielded Ball-bearing Motors
- Washable, Reuseable Filter

ACCESSORIES AND OPTIONS

	Page
Grille Assembly	179
IP54 & IP55 Filter Protection	✦
Other voltages, both AC & DC	✦
Replacement Filter	✦
Reversed Airflow Direction*	✦

✦ Contact KOOLTRONIC for information.

* To order reversed airflow direction, add “R” after series number. Example: KNP40RF.

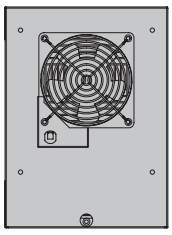

KNP40F
105 CFM*
11"H x 8"W x 5"D

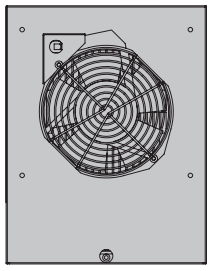

KNP60F
212 CFM*
12"H x 9"W x 5"D

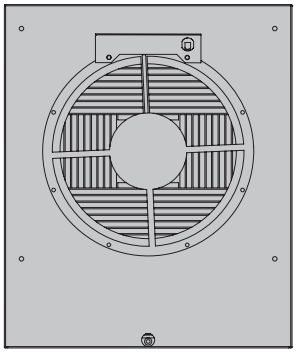

KNP100F
405 CFM*
16"H x 14"W x 8"D

* Fan airflow without filter.

SENTRY SERIES NEMA 3R FILTER FANS KNP40F

Products in red are legacy products. Legacy products are no longer in normal production. Consult factory for availability.

Recommended replacement: See *Guardian/GuardianX Series*



TECHNICAL DATA

Model	Normally In Stock	Voltage	Frequency Hz	Input mA	Input Watts	Fan Airflow CFM*	Fan w/Grille Airflow CFM**	Noise db(A)	Operating Temp. ºF Min.	Operating Temp. ºF Max	Approx. Weight Lbs.	Approx. Weight Kg.
KNP40F	Yes	115 VAC	50/60	.22/.22	18/17	88/102	60/69	45/47.5	14	158	5.0	2.2
K2NP40F	Yes	230 VAC	50/60	.10/.11	15/17	88/102	50/51	45/47.5	14	158	5.0	2.2
K6NP40F		12 VDC	-	0.4	4.8	125	52	45/47.5	14	140	5.0	2.2
K7NP40F		24 VDC	-	0.3	7.2	100	51	45/47.5	14	140	5.0	2.2
K8NP40F		48 VDC	-	<.1	-	100	57	45/47.5	14	158	5.0	2.2

* Fan airflow without filter.
** NEMA Rated if installed with provided filter.

c UL us

NEMA
TYPE 3R
MAINTAINED

STANDARD FEATURES

- Baked Powder Finish
- Integrated Fan Guards
- Integrated Sealing Gasket
- Most Assemblies are UL/CUL Listed
- NEMA 3R Rating Maintained (if used with provided filter)
- Secure Mounting
- UL/CSA Shielded Ball Bearing Motors
- UL/CUL Listed
- Washable, Reuseable Filter

ACCESSORIES AND OPTIONS

	Page
■ Grille Assembly (P/N: KNPA40F)	179
■ IP54 & IP55 Filter Protection	✦
■ Other voltages, both AC & DC	✦
■ Replacement Filters (P/N: 531F)	✦
■ Reversed Airflow Direction*	✦

✦ Contact KOOLTRONIC for information.

* To order reversed airflow direction, add "R" after series number. Example: KNP40RF.

PERFORMANCE CHART

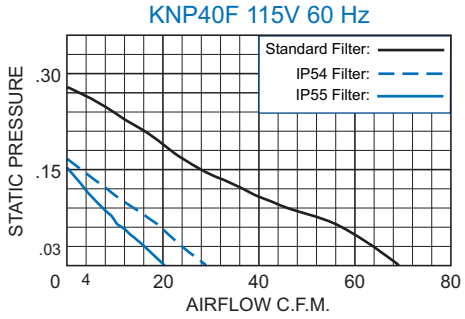

HOW TO ORDER

Specify model number.

DRAWINGS

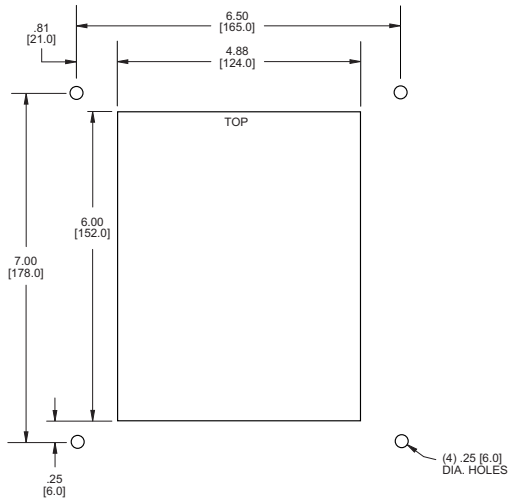

MOUNTING PLAN

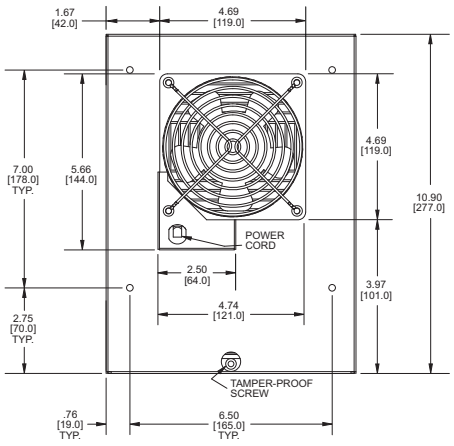

INSIDE VIEW

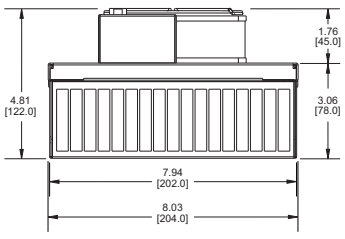

BOTTOM VIEW

Dimensions, inches [mm], are for reference only and are subject to change.

SENTRY FILTER FANS

SENTRY SERIES NEMA 3R FILTER FANS KNP60F

Products in red are legacy products. Legacy products are no longer in normal production. Consult factory for availability.

Recommended replacement: See *Guardian/GuardianX Series*

TECHNICAL DATA

Model	Normally In Stock	Voltage	Frequency Hz	Input mA	Input Watts	Fan Airflow CFM*	Fan w/Grille Airflow CFM**	Noise db(A)	Operating Temp. ºF Min.	Operating Temp. ºF Max	Approx. Weight Lbs.	Approx. Weight Kg.
KNP60F	Yes	115 VAC	50/60	.27/.32	31/37	183/212	116/134	57/61	-40	158	6.5	2.9
K2NP60F	Yes	230 VAC	50/60	.12/.15	28/34	183/212	111/133	57/61	-40	158	6.5	2.9
K8NP60F		48 VDC	-	0.4	19.2	230	132	61	14	158	6.5	2.9

* Fan airflow without filter.
** NEMA Rated if installed with provided filter.



NEMA TYPE 3R MAINTAINED

STANDARD FEATURES

- Baked Powder Finish
- Integrated Fan Guards
- Integrated Sealing Gasket
- Most Assemblies are UL/CUL Listed
- NEMA 3R Rating Maintained (if used with provided filter)
- Secure Mounting
- UL/CSA Shielded Ball Bearing Motors
- UL/CUL Listed
- Washable, Reuseable Filter

ACCESSORIES AND OPTIONS

	Page
Grille Assembly (P/N: KNPA60F)	179
IP54 & IP55 Filter Protection	✦
Other voltages, both AC & DC	✦
Replacement Filters (P/N: 681F)	✦
Reversed Airflow Direction*	✦

✦ Contact KOOLTRONIC for information.

* To order reversed airflow direction, add "R" after series number. Example: KNP60RF.

PERFORMANCE CHART

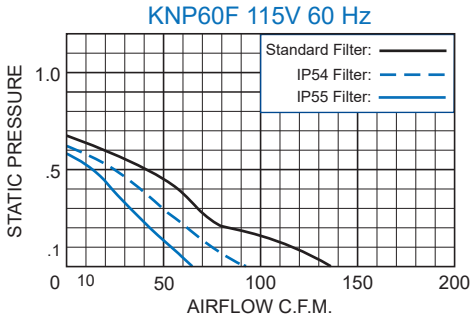

HOW TO ORDER

Specify model number.

DRAWINGS

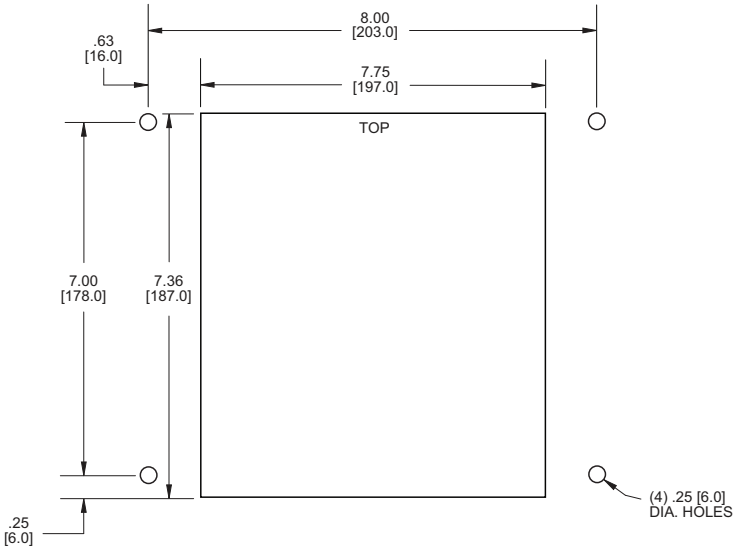

MOUNTING PLAN

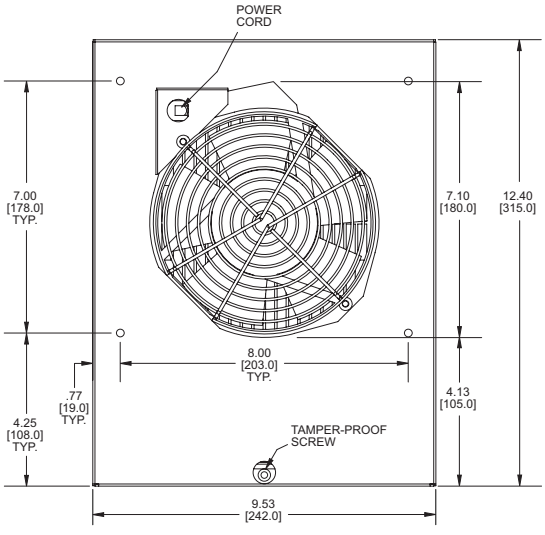

INSIDE VIEW

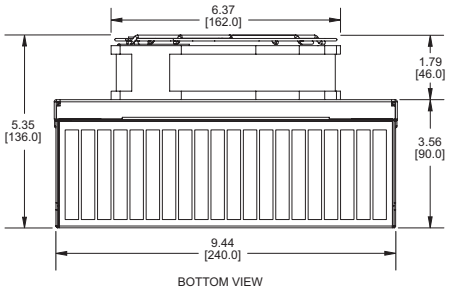

BOTTOM VIEW

Dimensions, inches [mm], are for reference only and are subject to change.

SENTRY FILTER FANS

SENTRY SERIES NEMA 3R FILTER FANS KNP100F

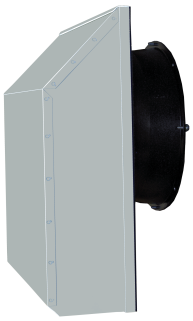

NEMA TYPE 3R MAINTAINED

TECHNICAL DATA

Model	Normally In Stock	Voltage	Frequency Hz	Input mA	Input Watts	Fan Airflow CFM*	Fan w/Grille Airflow CFM**	Noise db(A)	Operating Temp. ºF Min.	Operating Temp. ºF Max	Approx. Weight Lbs.	Approx. Weight Kg.
KNP100F	Yes	115 VAC	50/60	.35/.38	36/38	338/405	141/172	55/58	-40	158	12.5	5.6
K2NP100F	Yes	230 VAC	50/60	.50/.45	64/62	338/405	151/188	55/58	-40	158	12.5	5.6

* Fan airflow without filter.
** NEMA Rated if installed with provided filter.

STANDARD FEATURES

- Baked Powder Finish
- Integrated Fan Guards
- Integrated Sealing Gasket
- Most Assemblies are UL/CUL Listed
- NEMA 3R Rating Maintained (if used with provided filter)
- Secure Mounting
- UL/CSA Shielded Ball Bearing Motors
- UL/CUL Listed
- Washable, Reuseable Filter

ACCESSORIES AND OPTIONS

	Page
■ Grille Assembly (P/N: KNPA100F)	179
■ IP54 & IP55 Filter Protection	✦
■ Other voltages, both AC & DC	✦
■ Replacement Filters (P/N: 1081F)	✦
■ Reversed Airflow Direction	✦

✦ Contact KOOLTRONIC for information.

* To order reversed airflow direction, add “R” after series number. Example: KNP100RF.

PERFORMANCE CHART

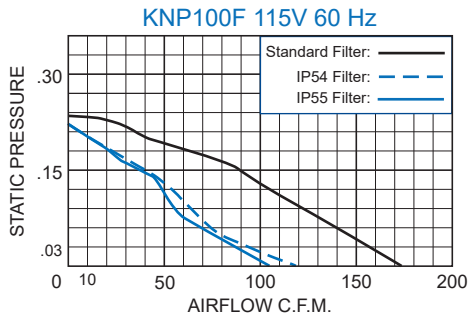

HOW TO ORDER

Specify model number.

DRAWINGS

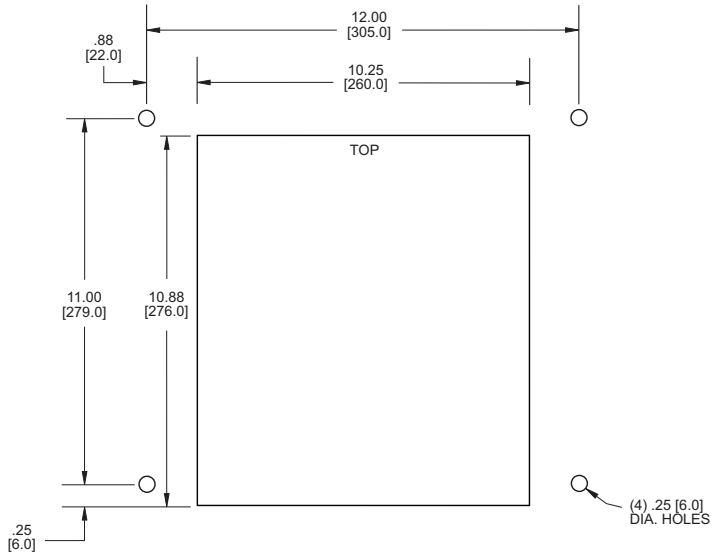

MOUNTING PLAN

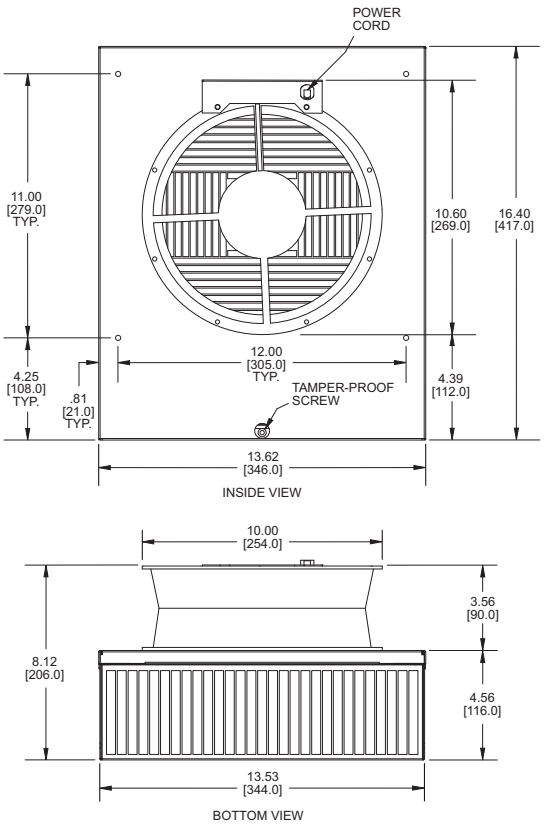

Dimensions, inches [mm], are for reference only and are subject to change.

SENTRY FILTER FANS

GUARDIAN/GUARDIANX SERIES NEMA 4 OR 4X FILTER FANS

DESCRIPTION

Kooltronic has expanded its line of filter fans to include models offering the security of ***NEMA 4*** or ***4X*** Ratings together with the versatility of indoor or outdoor use. All ***Guardian Series Filter Fans*** have a ***NEMA 4*** Rating. The ***GuardianX Series Filter Fans,*** with a ***NEMA 4X*** Rating, are offered with a Stainless Steel Shell. The ***Guardian/GuardianX Series Indoor/Outdoor Filter Fans*** are a perfect choice for dissipating high heat loads economically.

The ***Guardian/GuardianX Series Indoor/Outdoor Filter Fans*** offer the same convenience, versatility and reliability as the ***Advantage*** and ***Sentry Series Filter Fans*** with the added protection of a ***NEMA 4 or 4X Rating***, making these models an excellent choice for washdown, telecommunications and the food service industry.

General specifications common to all KOOLTRONIC Fans are on the first page of this section.

KOOLTRONIC also designs and manufactures a variety of fans to meet *unique* specifications. We invite your inquiries about our modification and custom-design capabilities.

CALL 1-800-321-KOOL (5665)
or FAX 609-466-1114

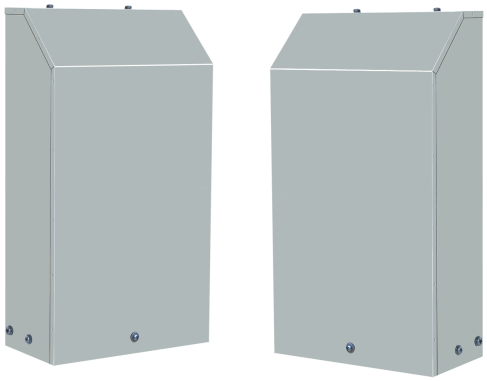

c UL us

NEMA
TYPE 4 OR 4X MAINTAINED

For general ventilating use only. Do not use these fans to exhaust hazardous or explosive material and vapors. NOT ALL SYSTEMS ARE SUITABLE FOR UTILIZING OUTSIDE AIR. To protect sensitive components against condensation an enclosure heater or closed-loop cooling is recommended. To protect sensitive components against corrosive elements closed-loop cooling is recommended.

STANDARD FEATURES

- Baked Powder Finish
- Integrated Fan Guards
- Integrated Sealing Gasket
- IP55 Filter Protection
- NEMA 4 or 4X Rating Maintained (if used with provided filter)
- Secure Mounting
- Six foot [1.8] (minimum 3-Wire Power Cord
- Stainless Steel Shell (NEMA 4X models)
- UL/CSA Shielded Ball-bearing Motors
- UL/CUL Listed
- Washable, Reuseable Filter

ACCESSORIES AND OPTIONS

	Page
■ Filter-Hood Assembly (Recommended)	✦
■ Other voltages, both AC & DC	✦
■ Replacement Filters	✦
■ Reversed Airflow Direction*	✦

✦ Contact KOOLTRONIC for information.

* To order reversed airflow direction, add “R” after series number. Example: KNP40RFL.

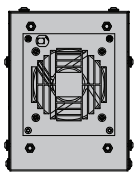

KNP32FL
20 / 27 CFM*
8"H x 6"W x 5"D

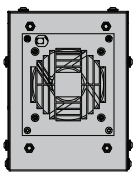

KNP36FL
26 / 26 CFM*
8"H x 6"W x 5"D

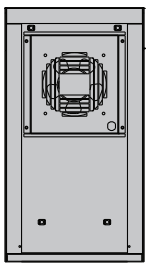

KNP40FL
40 / 45 CFM*
18"H x 10"W x 5"D

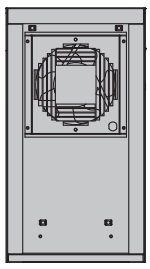

KNP60FL
84 / 92 CFM*
18"H x 10"W x 5"D

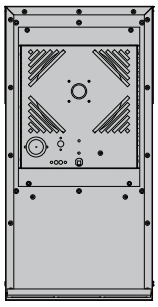

KNP180FL
177 / 179 CFM*
23"H x 12"W x 10"D

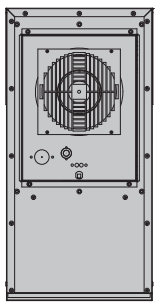

KNP225FL
250 / 444 CFM*
23"H x 12"W x 10"D

* Fan airflow without filter.

GUARDIAN/GUARDIANX SERIES
NEMA 4 OR 4X FILTER FANS KNP32FL

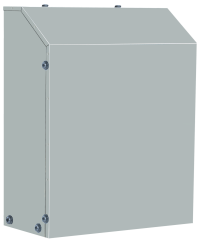

Model	Airflow Direction	Nema Rating	Voltage	Input Amps	Input Watts	Max. Airflow CFM*	Unit Airflow CFM**	Noise db(A)	Operating Temp. ºF Min.	Operating Temp. ºF Max	Approx. Weight Lbs.	Approx. Weight Kg.
KNP32FL	Intake	4	115 VAC	0.09	2.9	30	20	53	-40	158	3.8	1.7
KNP32RFL	Exhaust	4	115 VAC	0.09	2.9	37	27	53	-40	158	3.8	1.7
K2NP32FL	Intake	4	230 VAC	0.09	2.9	30	20	53	-40	158	3.8	1.7
K2NP32RFL	Exhaust	4	230 VAC	0.09	2.9	37	27	53	-40	158	3.8	1.7
KNP32FLV	Intake	4X	115 VAC	0.09	2.9	30	20	53	-40	158	3.8	1.7
KNP32RFLV	Exhaust	4X	115 VAC	0.09	2.9	37	27	53	-40	158	3.8	1.7
K2NP32FLV	Intake	4X	230 VAC	0.09	2.9	30	20	53	-40	158	3.8	1.7
K2NP32RFLV	Exhaust	4X	230 VAC	0.09	2.9	37	27	53	-40	158	3.8	1.7

* Fan airflow without filter.
** NEMA Rated if installed with provided filter.

c UL us

NEMA
TYPE 4 OR 4X MAINTAINED

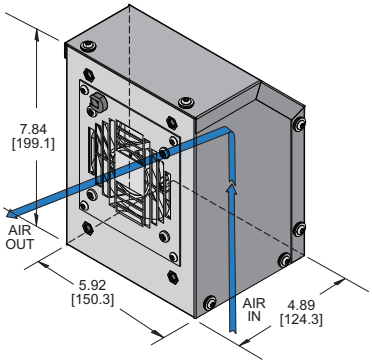

STANDARD FEATURES

- Baked Powder Finish
- Integrated Fan Guards
- Integrated Sealing Gasket
- IP55 Filter Protection
- NEMA 4 or 4X Rating Maintained (if used with provided filter)
- Secure Mounting
- Six-Foot [1.8m] (minimum) 3-Wire Power Cord
- Stainless Steel Shell (NEMA 4X models)
- UL/CSA Shielded Ball-bearing Motors
- UL/CUL Listed
- Washable, Reuseable Filter

ACCESSORIES AND OPTIONS

	Page
■ Filter-Hood Assembly (Recommended) P/N: KNPA36FL(V)	
■ Other voltages, both AC & DC	✦
■ Replacement Filters (P/N: 0429-02-06)	✦
■ Reversed Airflow Direction*	✦

✦ Contact KOOLTRONIC for information.

* To order reversed airflow direction, add “R” after series number. Example: KNP32RFL.

PERFORMANCE CHART

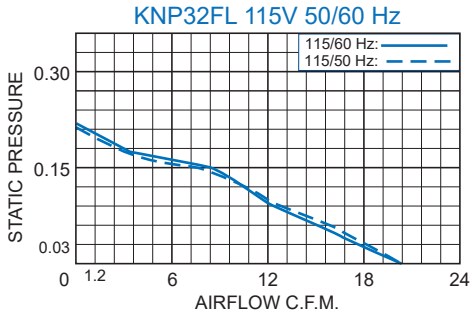

Airflow vs. static pressure curves are shown for 60 Hz and 50 Hz (broken line) inputs.

DRAWINGS

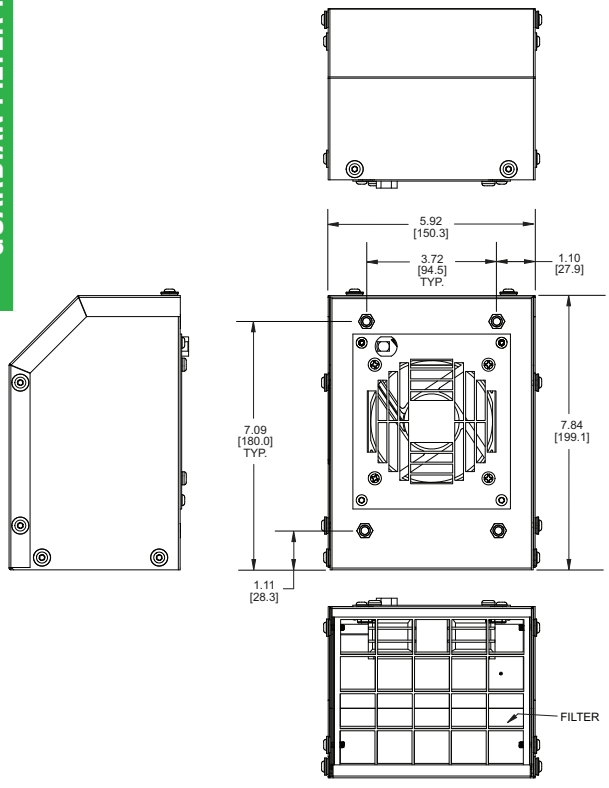

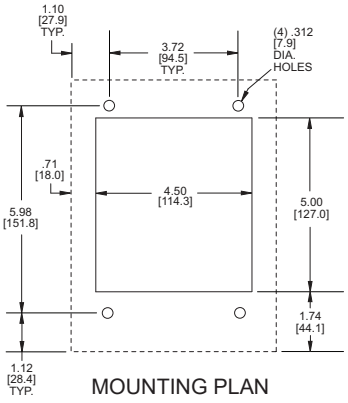

MOUNTING PLAN

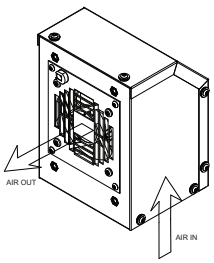

REVERSE AIR FLOW OPTION (R) AVAILABLE

For general ventilating use only. Do not use these fans to exhaust hazardous or explosive material and vapors. NOT ALL SYSTEMS ARE SUITABLE FOR UTILIZING OUTSIDE AIR. To protect sensitive components against condensation an enclosure heater or closed-loop cooling is recommended. To protect sensitive components against corrosive elements closed-loop cooling is recommended.

HOW TO ORDER

Specify model number.

Dimensions, inches [mm], are for reference only and are subject to change.

GUARDIAN/GUARDIANX SERIES
NEMA 4 OR 4X FILTER FANS KNP36FL

Model	Airflow Direction	Nema Rating	Voltage	Input Amps	Input Watts	Max. Airflow CFM*	Unit Airflow CFM**	Noise db(A)	Operating Temp. ºF Min.	Operating Temp. ºF Max	Approx. Weight Lbs.	Approx. Weight Kg.
KNP36FL	Intake	4	115 VAC	0.08	4.3	47	26	54	-40	158	3.7	1.7
KNP36RFL	Exhaust	4	115 VAC	0.08	4.3	52	26	55	-40	158	3.7	1.7
K2NP36FL	Intake	4	230 VAC	0.08	4.3	47	26	54	-40	158	3.7	1.7
K2NP36RFL	Exhaust	4	230 VAC	0.08	4.3	52	26	55	-40	158	3.7	1.7
KNP36FLV	Intake	4X	115 VAC	0.08	4.3	47	26	54	-40	158	3.7	1.7
KNP32RFLV	Exhaust	4X	115 VAC	0.08	4.3	52	26	55	-40	158	3.7	1.7
K2NP36FLV	Intake	4X	230 VAC	0.08	4.3	47	26	54	-40	158	3.7	1.7
K2NP36RFLV	Exhaust	4X	230 VAC	0.08	4.3	52	26	55	-40	158	3.7	1.7

* Fan airflow without filter.
** UL Rated if installed with provided filter.

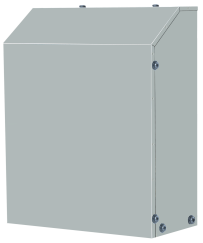

NEMA TYPE 4 OR 4X MAINTAINED

STANDARD FEATURES

- Baked Powder Finish
- Integrated Fan Guards
- Integrated Sealing Gasket
- IP55 Filter Protection
- NEMA 4 or 4X Rating Maintained (if used with provided filter)
- Secure Mounting
- Stainless Steel Shell (NEMA 4X models)
- UL/CSA Shielded Ball-bearing Motors
- UL/CUL Listed
- Washable, Reuseable Filter

ACCESSORIES AND OPTIONS

	Page
Filter-Hood Assembly (Recommended) P/N: KNPA36FL(V)	✦
Other voltages, both AC & DC	✦
Replacement Filters (P/N: 0429-02-06)	✦
Reversed Airflow Direction*	✦

✦ Contact KOOLTRONIC for information.

* To order reversed airflow direction, add “R” after series number. Example: KNP32RFL.

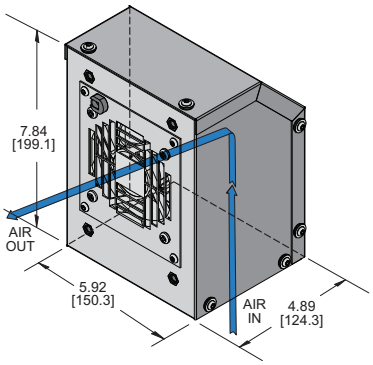

PERFORMANCE CHART

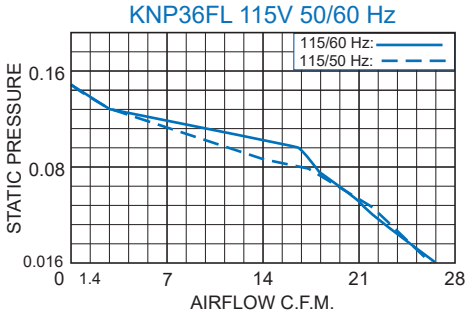

Airflow vs. static pressure curves are shown for 60 Hz and 50 Hz (broken line) inputs.

DRAWINGS

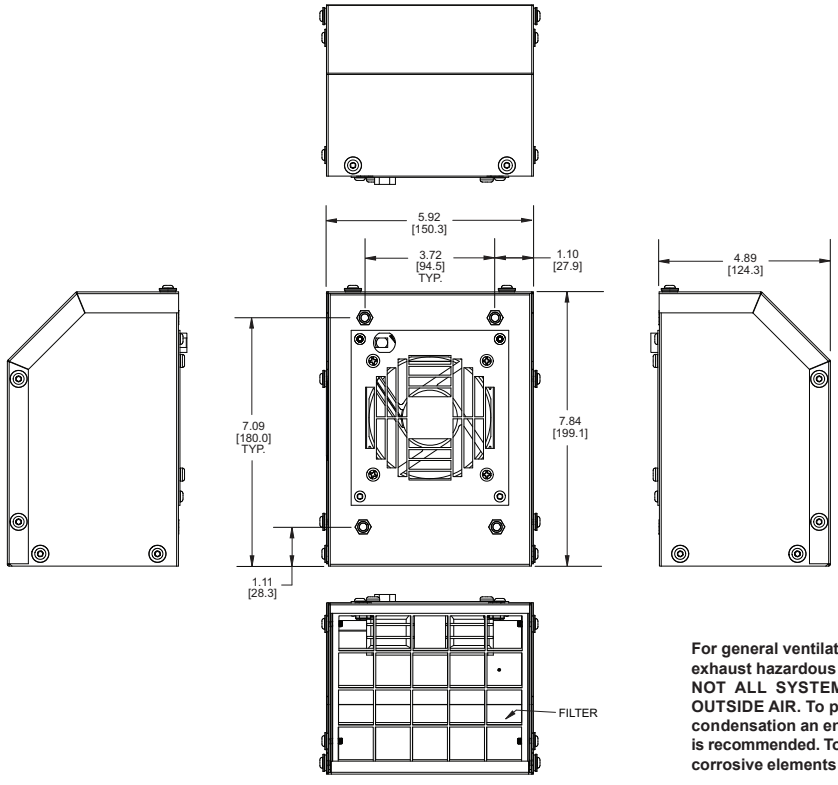

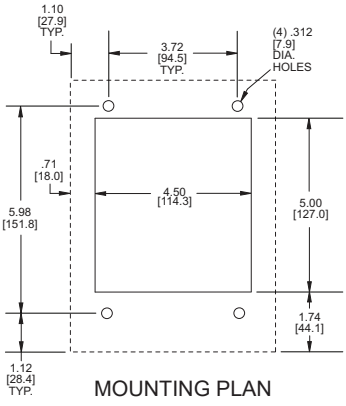

MOUNTING PLAN

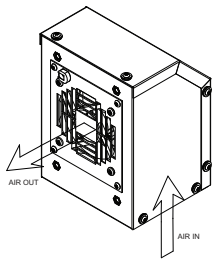

REVERSE AIR FLOW OPTION (R) AVAILABLE

For general ventilating use only. Do not use these fans to exhaust hazardous or explosive material and vapors. NOT ALL SYSTEMS ARE SUITABLE FOR UTILIZING OUTSIDE AIR. To protect sensitive components against condensation an enclosure heater or closed-loop cooling is recommended. To protect sensitive components against corrosive elements closed-loop cooling is recommended.

HOW TO ORDER

Specify model number.

Dimensions, inches [mm], are for reference only and are subject to change.

GUARDIAN FILTER FANS

GUARDIAN/GUARDIANX SERIES
NEMA 4 OR 4X FILTER FANS KNP40FL

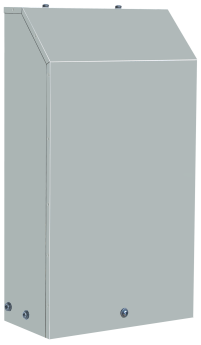

NEMA TYPE 4 OR 4X MAINTAINED

Model	Airflow Direction	NEMA Rating	Voltage	Input Amps	Input Watts	Fan Airflow CFM*	Unit Airflow CFM**	Noise db(A)	Operating Temp. ºF Min.	Operating Temp. ºF Max	Approx. Weight Lbs.	Approx. Weight Kg.
KNP40FL	Intake	NEMA 4	115/60	0.19	13	106	45	55	-40	158	10	4.5
KNP40RFL	Exhaust	NEMA 4	115/60	0.19	13	106	45	55	-40	158	10	4.5
KNP40FL	Intake	NEMA 4	115/50	0.22	14	90	40	52	-40	158	10	4.5
KNP40RFL	Exhaust	NEMA 4	115/50	0.22	14	90	40	52	-40	158	10	4.5
K2NP40FL	Intake	NEMA 4	230/60	0.11	12	106	44	55	-40	158	10	4.5
K2NP40RFL	Exhaust	NEMA 4	230/60	0.11	12	106	44	55	-40	158	10	4.5
K2NP40FL	Intake	NEMA 4	230/50	0.13	14	90	39	52	-40	158	10	4.5
K2NP40RFL	Exhaust	NEMA 4	230/50	0.13	14	90	39	52	-40	158	10	4.5
K6NP40FL	Intake	NEMA 4	12 VDC	0.43	5.1	100	27	43	14	158	10	4.5
K6NP40RFL	Exhaust	NEMA 4	12 VDC	0.43	5.1	100	27	43	14	158	10	4.5
K7NP40FL	Intake	NEMA 4	24 VDC	0.1	2.4	108	41	45	14	158	10	4.5
K7NP40RFL	Exhaust	NEMA 4	24 VDC	0.1	2.4	108	41	45	14	158	10	4.5
K8NP40FL	Intake	NEMA 4	48 VDC	0.11	5.3	108	30	43	14	158	10	4.5
K8NP40RFL	Exhaust	NEMA 4	48 VDC	0.11	5.3	108	30	43	14	158	10	4.5
KNP40FLV	Intake	NEMA 4X	115/60	0.19	13	106	45	55	-40	158	10	4.5
KNP40RFLV	Exhaust	NEMA 4X	115/60	0.19	13	106	45	55	-40	158	10	4.5
KNP40FLV	Intake	NEMA 4X	115/50	0.22	14	90	40	52	-40	158	10	4.5
KNP40RFLV	Exhaust	NEMA 4X	115/50	0.22	14	90	40	52	-40	158	10	4.5
K2NP40FLV	Intake	NEMA 4X	230/60	0.11	12	106	44	55	-40	158	10	4.5
K2NP40RFLV	Exhaust	NEMA 4X	230/60	0.11	12	106	44	55	-40	158	10	4.5
K2NP40FLV	Intake	NEMA 4X	230/50	0.13	14	90	39	52	-40	158	10	4.5
K2NP40RFLV	Exhaust	NEMA 4X	230/50	0.13	14	90	39	52	-40	158	10	4.5
K6NP40FLV	Intake	NEMA 4X	12 VDC	0.43	5.1	100	27	43	14	158	10	4.5
K6NP40RFLV	Exhaust	NEMA 4X	12 VDC	0.43	5.1	100	27	43	14	158	10	4.5
K7NP40FLV	Intake	NEMA 4X	24 VDC	0.1	2.4	108	41	45	14	158	10	4.5
K7NP40RFLV	Exhaust	NEMA 4X	24 VDC	0.1	2.4	108	41	45	14	158	10	4.5
K8NP40FLV	Intake	NEMA 4X	48 VDC	0.11	5.3	108	30	43	14	158	10	4.5
K8NP40RFLV	Exhaust	NEMA 4X	48 VDC	0.11	5.3	108	30	43	14	158	10	4.5

* Fan airflow without filter and grille.
** NEMA Rated if installed with provided filter.

PERFORMANCE CHART

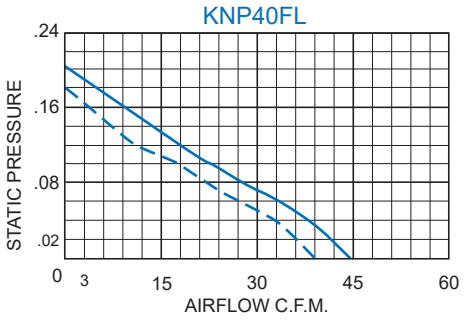

Airflow vs. static pressure curves are shown for 60 Hz and 50 Hz (broken line) inputs.

HOW TO ORDER

Specify model number.

STANDARD FEATURES

- Baked Powder Finish
- Integrated Fan Guards
- Integrated Sealing Gasket
- IP55 Filter Protection
- NEMA 4 or 4X Rating Maintained (if used with provided filter)
- Secure Mounting
- Six-Foot [1.8m] (minimum) 3-Wire Power Cord
- Stainless Steel Shell (NEMA 4X models)
- UL/CSA Shielded Ball-bearing Motors
- UL/CUL Listed
- Washable, Reuseable Filter

ACCESSORIES AND OPTIONS

	Page
■ Filter-Hood Assembly (Recommended) P/N: KNPA60FL(V)	✦
■ Other voltages, both AC & DC	✦
■ Replacement Filters (P/N: 0429-01-01)	✦
■ Reversed Airflow Direction*	✦

✦ Contact KOOLTRONIC for information.

* To order reversed airflow direction, add “R” after series number. Example: KNP40RFL.

DRAWINGS

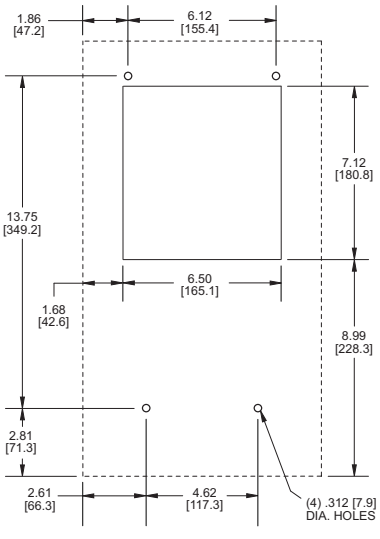

MOUNTING PLAN

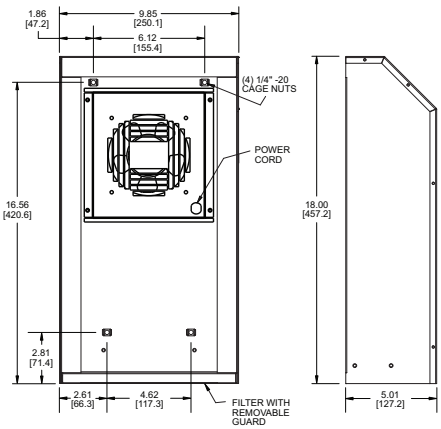

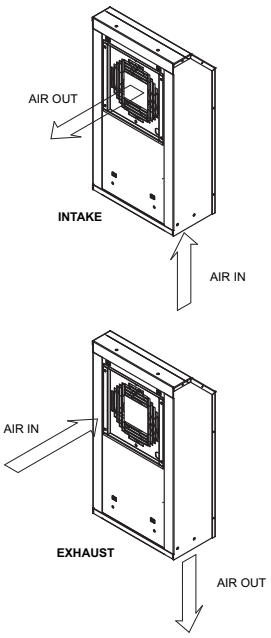

For general ventilating use only. Do not use these fans to exhaust hazardous or explosive material and vapors.
NOT ALL SYSTEMS ARE SUITABLE FOR UTILIZING OUTSIDE AIR. To protect sensitive components against condensation an enclosure heater or closed-loop cooling is recommended. To protect sensitive components against corrosive elements closed-loop cooling is recommended.

Dimensions, inches [mm], are for reference only and are subject to change.

GUARDIAN FILTER FANS

GUARDIAN/GUARDIANX SERIES
NEMA 4 OR 4X FILTER FANS KNP60FL

Model	Airflow Direction	NEMA Rating	Voltage	Input Amps	Input Watts	Fan Airflow CFM*	Unit Airflow CFM**	Noise db(A)	Operating Temp. ºF Min.	Operating Temp. ºF Max	Approx. Weight Lbs.	Approx. Weight Kg.
KNP60FL	Intake	NEMA 4	115/60	0.34	37	290	92	61	-40	158	11.3	5.1
KNP60RFL	Exhaust	NEMA 4	115/60	0.34	37	290	92	61	-40	158	11.3	5.1
KNP60FL	Intake	NEMA 4	115/50	0.42	43	270	84	59	-40	158	11.3	5.1
KNP60RFL	Exhaust	NEMA 4	115/50	0.42	43	270	84	59	-40	158	11.3	5.1
K2NP60FL	Intake	NEMA 4	230/60	0.17	36	290	80	61	-40	158	11.3	5.1
K2NP60RFL	Exhaust	NEMA 4	230/60	0.17	36	290	80	61	-40	158	11.3	5.1
K2NP60FL	Intake	NEMA 4	230/50	0.2	37	270	70	59	-40	158	11.3	5.1
K2NP60RFL	Exhaust	NEMA 4	230/50	0.2	37	270	70	59	-40	158	11.3	5.1
K6NP60FL	Intake	NEMA 4	12 VDC	0.52	6.2	225	72	67	-40	167	11.3	5.1
K6NP60RFL	Exhaust	NEMA 4	12 VDC	0.52	6.2	225	72	67	-40	167	11.3	5.1
K7NP60FL	Intake	NEMA 4	24 VDC	0.6	14.4	230	72	54	-40	158	11.3	5.1
K7NP60RFL	Exhaust	NEMA 4	24 VDC	0.6	14.4	230	72	54	-40	158	11.3	5.1
K8NP60FL	Intake	NEMA 4	48 VDC	0.36	16.8	240	40	58	-40	158	11.3	5.1
K8NP60RFL	Exhaust	NEMA 4	48 VDC	0.36	16.8	240	40	58	-40	158	11.3	5.1
KNP60FLV	Intake	NEMA 4X	115/60	0.34	37	290	92	61	-40	158	11.3	5.1
KNP60RFLV	Exhaust	NEMA 4X	115/60	0.34	37	290	92	61	-40	158	11.3	5.1
KNP60FLV	Intake	NEMA 4X	115/50	0.42	43	270	84	59	-40	158	11.3	5.1
KNP60RFLV	Exhaust	NEMA 4X	115/50	0.42	43	270	84	59	-40	158	11.3	5.1
K2NP60FLV	Intake	NEMA 4X	230/60	0.17	36	290	80	61	-40	158	11.3	5.1
K2NP60RFLV	Exhaust	NEMA 4X	230/60	0.17	36	290	80	61	-40	158	11.3	5.1
K2NP60FLV	Intake	NEMA 4X	230/50	0.2	37	270	70	59	-40	158	11.3	5.1
K2NP60RFLV	Exhaust	NEMA 4X	230/50	0.2	37	270	70	59	-40	158	11.3	5.1
K6NP60FLV	Intake	NEMA 4X	12 VDC	0.52	6.2	225	72	67	-40	167	11.3	5.1
K6NP60RFLV	Exhaust	NEMA 4X	12 VDC	0.52	6.2	225	72	67	-40	167	11.3	5.1
K7NP60FLV	Intake	NEMA 4X	24 VDC	0.6	14.4	230	72	54	-40	158	11.3	5.1
K7NP60RFLV	Exhaust	NEMA 4X	24 VDC	0.6	14.4	230	72	54	-40	158	11.3	5.1
K8NP60FLV	Intake	NEMA 4X	48 VDC	0.36	16.8	240	40	58	-40	158	11.3	5.1
K8NP60RFLV	Exhaust	NEMA 4X	48 VDC	0.36	16.8	240	40	58	-40	158	11.3	5.1

* Fan airflow without filter and grille.
** NEMA Rated if installed with provided filter.

c UL us

NEMA
TYPE 4 OR 4X MAINTAINED

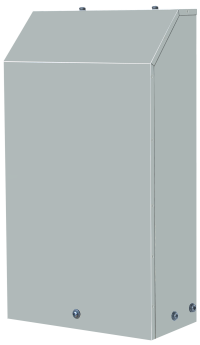

PERFORMANCE CHART

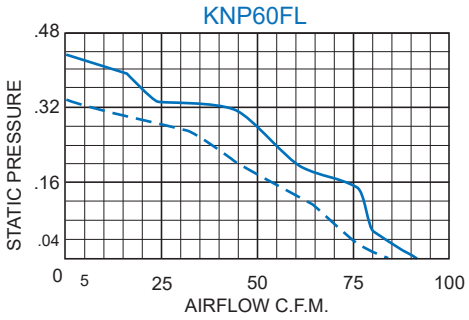

Airflow vs. static pressure curves are shown for 60 Hz and 50 Hz (broken line) inputs.

DRAWINGS

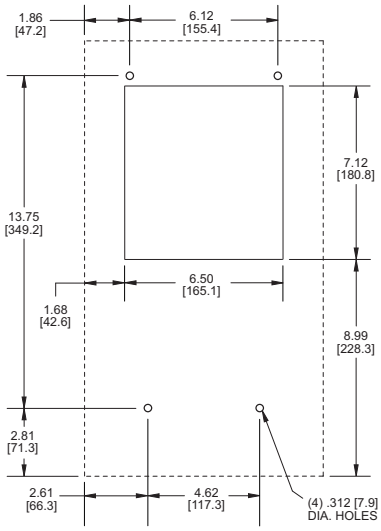

MOUNTING PLAN

STANDARD FEATURES

- Baked Powder Finish
- Integrated Fan Guards
- Integrated Sealing Gasket
- IP55 Filter Protection
- NEMA 4 or 4X Rating Maintained (if used with provided filter)
- Secure Mounting
- Six-Foot [1.8m] (minimum) 3-Wire Power Cord
- Stainless Steel Shell (NEMA 4X models)
- UL/CSA Shielded Ball-bearing Motors
- UL/CUL Listed
- Washable, Reuseable Filter

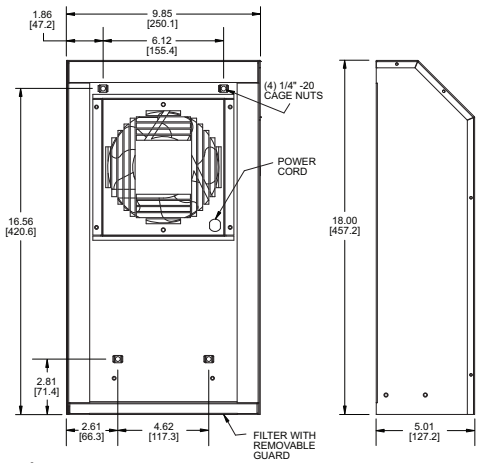

ACCESSORIES AND OPTIONS

	Page
■ Filter-Hood Assembly (Recommended) P/N: KNPA60FL(V)	✦
■ Other voltages, both AC & DC	✦
■ Replacement Filters (P/N:0429-01-01)	✦
■ Reversed Airflow Direction*	✦

✦ Contact KOOLTRONIC for information.

* To order reversed airflow direction, add “R” after series number. Example: KNP40RFL.

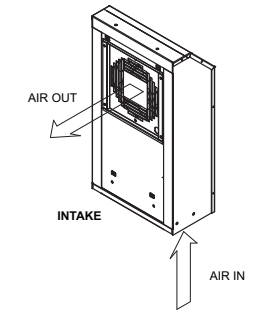

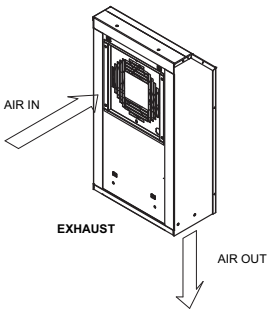

For general ventilating use only. Do not use these fans to exhaust hazardous or explosive material and vapors.
NOT ALL SYSTEMS ARE SUITABLE FOR UTILIZING OUTSIDE AIR. To protect sensitive components against condensation an enclosure heater or closed-loop cooling is recommended. To protect sensitive components against corrosive elements closed-loop cooling is recommended.

HOW TO ORDER

Specify model number.

Dimensions, inches [mm], are for reference only and are subject to change.

GUARDIAN FILTER FANS

GUARDIAN/GUARDIANX SERIES
NEMA 4 OR 4X FILTER FANS KNP180FL

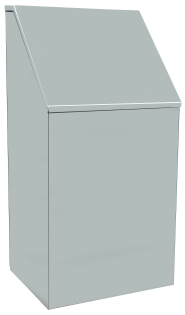

c UL us

NEMA
TYPE 4 OR 4X MAINTAINED

Model	Airflow Direction	NEMA Rating	Voltage	Input Amps	Input Watts	Max Airflow CFM*	Unit Airflow CFM**	Noise db(A)	Operating Temp. ºF Min.	Operating Temp. ºF Max	Approx. Weight Lbs.	Approx. Weight Kg.
KNP180FL	Intake	4	115/60	0.48	53	221	179	61.9	-40	158	23.5	10.7
KNP180RFL	Exhaust	4	115/60	0.48	53	220	177	61.9	-40	158	23.5	10.7
K2NP180FL	Intake	4	230/60	0.27	61	221	179	61.9	-40	158	23.5	10.7
K2NP180RFL	Exhaust	4	230/60	0.27	61	220	177	61.9	-40	158	23.5	10.7
K7NP180FL	Intake	4	24VDC	2.52	47	221	179	61.9	-4	158	23.5	10.7
K7NP180RFL	Exhaust	4	24VDC	2.52	47	220	177	61.9	-4	158	23.5	10.7
K8NP180FL	Intake	4	48 VDC	1.1	53	221	179	61.9	-4	158	23.5	10.7
K8NP180RFL	Exhaust	4	48 VDC	1.1	53	220	177	61.9	-4	158	23.5	10.7
KNP180 FLV	Intake	4X	115/60	0.48	53	221	179	61.9	-40	158	23.5	10.7
KNP180 RFLV	Exhaust	4X	115/60	0.48	53	220	177	61.9	-40	158	23.5	10.7
K2NP180FLV	Intake	4X	230/60	0.27	61	221	179	61.9	-40	158	23.5	10.7
K2NP180RFLV	Exhaust	4X	230/60	0.27	61	220	177	61.9	-40	158	23.5	10.7
K7NP180FLV	Intake	4X	24VDC	2.52	47	221	179	61.9	-4	158	23.5	10.7
K7NP180RFLV	Exhaust	4X	24VDC	2.52	47	220	177	61.9	-4	158	23.5	10.7
K8NP180FLV	Intake	4X	48 VDC	1.1	53	221	179	61.9	-4	158	23.5	10.7
K8NP180RFLV	Exhaust	4X	48 VDC	1.1	53	220	177	61.9	-4	158	23.5	10.7

* Fan airflow without filter and grille.
** NEMA Rated if installed with provided filter.

PERFORMANCE CHART

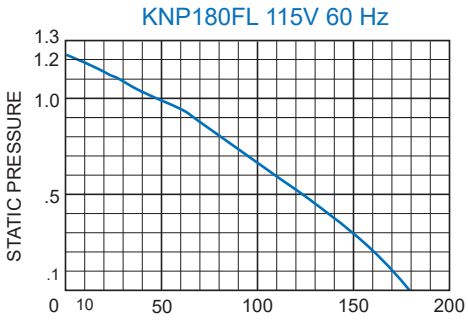

Airflow vs. static pressure curves are shown for 60 Hz and 50 Hz (broken line) inputs.

HOW TO ORDER

Specify model number.

STANDARD FEATURES

- Baked Powder Finish
- Integrated Fan Guards
- Integrated Sealing Gasket
- IP55 Filter Protection
- NEMA 4 or 4X Rating Maintained (if used with provided filter)
- Secure Mounting
- Six-Foot [1.8m] (minimum) 3-Wire Power Cord
- Stainless Steel Shell (NEMA 4X models)
- UL/CSA Shielded Ball-bearing Motors
- UL/CUL Listed
- Washable, Reuseable Filter

ACCESSORIES AND OPTIONS

	Page
■ Filter-Hood Assembly (Recommended) (P/N: KNPA225FL(V)	✦
■ Other voltages, both AC & DC	✦
■ Replacement Filters (P/N: 0429-01-06)	✦
■ Reversed Airflow Direction*	✦
■ T-Temperature Control (90ºF) (AC units only)	✦
■ B-Temperature Alarm (130ºF)	✦

✦ Contact KOOLTRONIC for information.

* To order reversed airflow direction, add “R” after series number. Example: KNP180RFL.

DRAWINGS

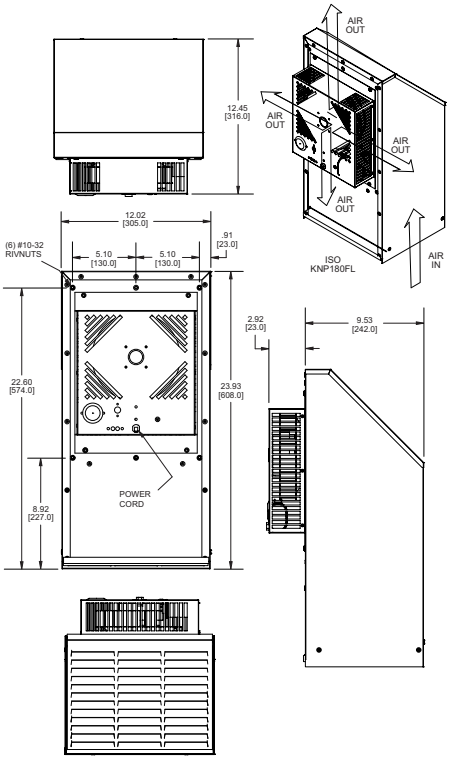

GENERAL ARRANGEMENT
KNP180FL

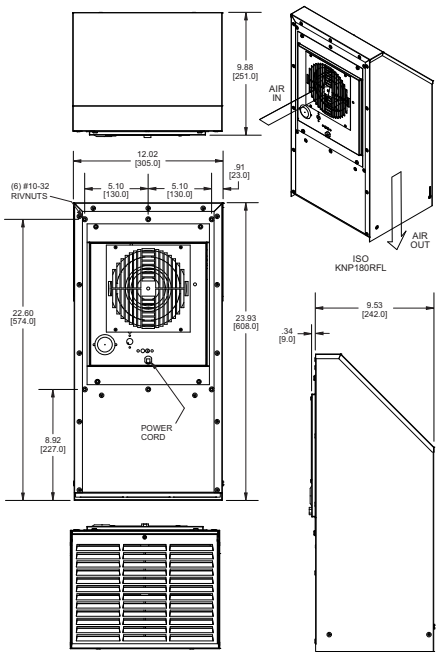

GENERAL ARRANGEMENT
KNP180RFL

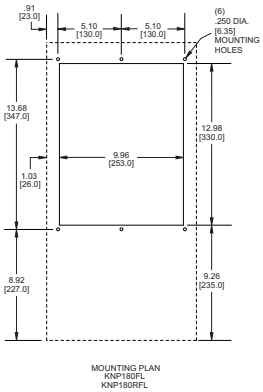

MOUNTING PLAN
KNP180FL
KNP180RFL

For general ventilating use only. Do not use these fans to exhaust hazardous or explosive material and vapors.
NOT ALL SYSTEMS ARE SUITABLE FOR UTILIZING OUTSIDE AIR. To protect sensitive components against condensation an enclosure heater or closed-loop cooling is recommended. To protect sensitive components against corrosive elements closed-loop cooling is recommended.

Dimensions, inches [mm], are for reference only and are subject to change.

GUARDIAN FILTER FANS

GUARDIAN/GUARDIANX SERIES
NEMA 4 OR 4X FILTER FANS KNP225FL

Model	Airflow Direction	NEMA Rating	Voltage	Input Amps	Input Watts	Max Airflow CFM*	Unit Airflow CFM**	Noise db(A)	Operating Temp. ºF Min.	Operating Temp. ºF Max	Approx. Weight Lbs.	Approx. Weight Kg.
KNP225FL	Intake	4	115	1.85	210	444	350	69.1	-40	122	23.5	10.7
KNP225RFL	Exhaust	4	115	1.85	210	444	350	69.1	-40	122	23.5	10.7
K2NP225FL	Intake	4	230	0.93	213	444	350	69.1	-40	140	23.5	10.7
K2NP225RFL	Exhaust	4	230	0.93	213	444	350	69.1	-40	140	23.5	10.7
K7NP225FL	Intake	4	24VDC	4.56	109	444	350	69.1	-4	158	23.5	10.7
K7NP225RFL	Exhaust	4	24VDC	4.56	109	444	350	69.1	-4	158	23.5	10.7
K8NP225FL	Intake	4	48 VDC	2.43	116	444	350	69.1	-4	158	23.5	10.7
K8NP225RFL	Exhaust	4	48 VDC	2.43	116	444	350	69.1	-4	158	23.5	10.7
KNP225FLV	Intake	4X	115	1.85	210	444	350	69.1	-40	122	23.5	10.7
KNP225RFLV	Exhaust	4X	115	1.85	210	444	350	69.1	-40	122	23.5	10.7
K2NP225FLV	Intake	4X	230	0.93	213	444	350	69.1	-40	140	23.5	10.7
K2NP225RFLV	Exhaust	4X	230	0.93	213	444	350	69.1	-40	140	23.5	10.7
K7NP225FLV	Intake	4X	24VDC	4.56	109	444	350	69.1	-4	158	23.5	10.7
K7NP225RFLV	Exhaust	4X	24VDC	4.56	109	444	350	61.9	-4	158	23.5	10.7
K8NP225FLV	Intake	4X	48 VDC	2.43	116	444	350	69.1	-4	158	23.5	10.7
K8NP225RFLV	Exhaust	4X	48 VDC	2.43	116	444	350	69.1	-4	158	23.5	10.7

* Fan airflow without filter and grille.
** NEMA Rated if installed with provided filter.

NEMA
TYPE 4 OR 4X
MAINTAINED

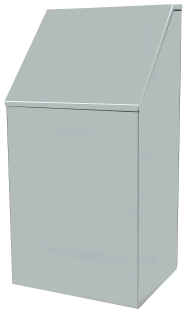

STANDARD FEATURES

- Baked Powder Finish
- Integrated Fan Guards
- Integrated Sealing Gasket
- IP55 Filter Protection
- NEMA 4 or 4X Rating Maintained (if used with provided filter)
- Secure Mounting
- Six-Foot [1.8m] (minimum) 3-Wire Power Cord
- Stainless Steel Shell (NEMA 4X models)
- UL/CSA Shielded Ball-bearing Motors
- UL/CUL Listed
- Washable, Reuseable Filter

ACCESSORIES AND OPTIONS

	Page
Filter-Hood Assembly (Recommended) (P/N: KNPA225FL(V)	✦
Other voltages, both AC & DC	✦
Replacement Filters (P/N: 0429-01-06)	✦
Reversed Airflow Direction*	✦
T-Temperature Control (90ºF) (AC units only)	✦
B-Temperature Alarm (130ºF)	✦

✦ Contact KOOLTRONIC for information.

* To order reversed airflow direction, add “R” after series number. Example: KNP180RFL.

PERFORMANCE CHART

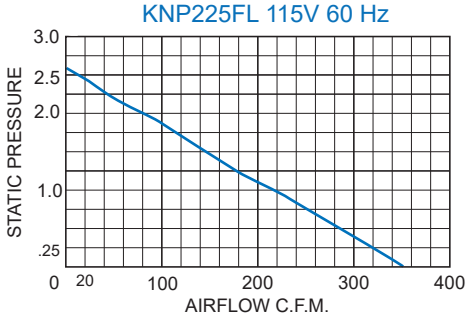

Airflow vs. static pressure curves are shown for 60 Hz and 50 Hz (broken line) inputs.

HOW TO ORDER

Specify model number.

DRAWINGS

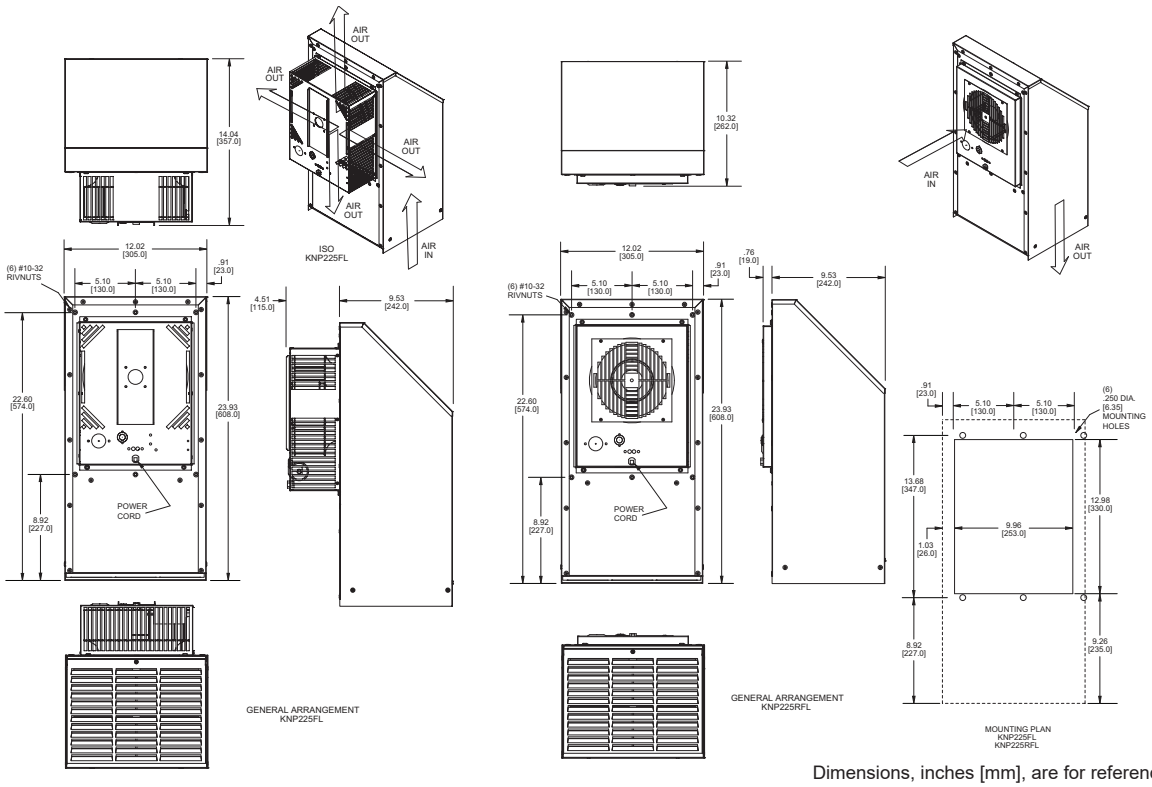

For general ventilating use only. Do not use these fans to exhaust hazardous or explosive material and vapors.
NOT ALL SYSTEMS ARE SUITABLE FOR UTILIZING OUTSIDE AIR. To protect sensitive components against condensation an enclosure heater or closed-loop cooling is recommended. To protect sensitive components against corrosive elements closed-loop cooling is recommended.

Dimensions, inches [mm], are for reference only and are subject to change.

GUARDIAN FILTER FANS

ADVANTAGE SERIES KBFF FILTER FANS
FILTER-GRILLE ASSEMBLIES



TYPE 12 MAINTAINED

KBFA21U

STANDARD FEATURES

Mounts Quickly and Easily
Attractive Appearance
Requires No Mounting Hardware
Integral Finger-Guards
Type 12 Maintained
Integrated Sealing Gasket
Washable Filter Media (about ten times)

CHARACTERISTICS

All materials can be recycled.

Mounting hardware is not required when using the “snap-in” method which utilizes elastic hooks.

The plastic enclosure with integral finger guards consists of an ABS/PC alloy (Blend) and is self-extinguishing according to UL94V-0.

The standard filter media consists of thermolinked, progressive structure synthetic fiber.

Filters are stable up to 100ºC and 100% rh.

Filters guarantee a continuously high level of protection according to EU4, with a 94% separation efficiency according to DIN 24185 Standard.

Dust capacity is particularly high (620 g/m2), which reduces maintenance.

Plate thickness: KBFA08U from .039 to .079, KBFA12U & KBFA21U from .039 to .083, KBFA21U & KBFA20U from .059 to .098.

KBFA08U

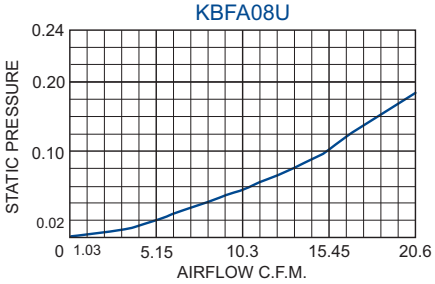

KBFA12U

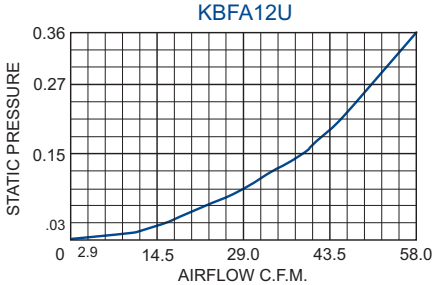

KBFA13U

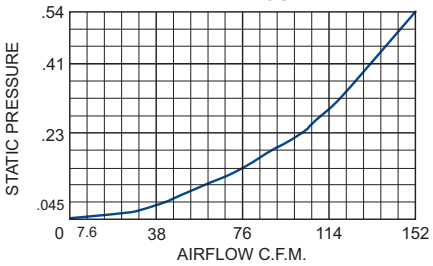

KBFA15U

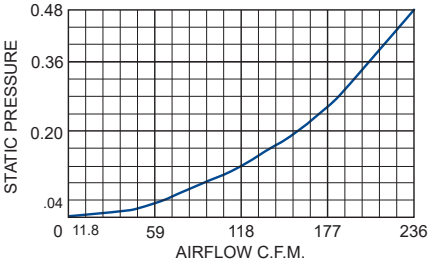

KBFA20U

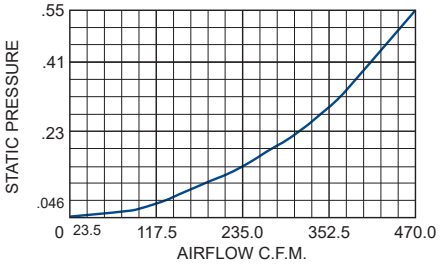

ACCESSORIES AND OPTIONS

RAL 9005, Black (See How to Order)
Filter

HOW TO ORDER

Specify model number. Example: KBFA08U. RAL 7035 (Light Grey) is standard color. Grille Assemblies are also available in RAL 9005 (Black). To order Black Grille, substitute N for U in model number.
Example: KBFA08U for Light Grey Grille, KBFA08N for Black Grille.

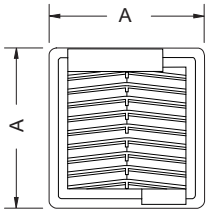

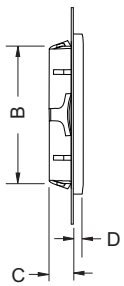

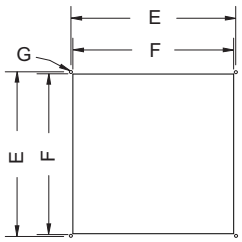

MOUNTING PLAN

Model	A	B	C	D	E	F		G	Cross section free without media	Approx. Weight		Approvals
	IN. [mm]	IN. [mm]	IN. [mm]	IN. [mm]	IN. [mm]	IN. [mm]	Tolerance	IN. [mm]	Sq. In.	Lbs.	Kg.	1,2,5
KBFA08U	4.19 [106.5]	3.60 [91.5]	.65 [16.5]	.26 [6.7]	3.74 [95.0]	3.64 [92.5]	+0.06/-0	.07 [1.8]	4.65	0.15	0.07	1,2,5
KBFA12U	5.91 [150.0]	4.92 [125.0]	.85 [21.5]	.30 [7.7]	5.16 [131.0]	4.92 [125.0]	+0.06/-0	.18 [4.5]	9.14	0.40	0.18	1,2,5
KBFA21U	8.03 [203.9]	6.93 [176.0]	.85 [21.5]	.32 [8.0]	7.28 [185.0]	6.97 [177.0]	+0.06/-0	.18 [4.5]	20.77	0.57	0.26	1,2,5
KBFA21U	9.84 [250.0]	8.78 [223.0]	.98 [24.9]	.35 [8.9]	9.06 [230.0]	8.78 [223.0]	+0.06/-0	.18 [4.5]	32.09	0.93	0.42	1,2,5
KBFA20U	12.79 [325.0]	11.45 [291.0]	.97 [24.5]	.37 [9.5]	11.89 [302.0]	11.46 [291.0]	+0.06/-0	.18 [4.5]	59.37	1.32	0.60	1,2,5

HOW TO ORDER

Specify model number.

APPROVALS: 1. NEMA TYPE 12 MAINTAINED 2. CE 3. CSA C US 4. UL 5. c UL us

SENTRY SERIES FILTER FANS
FILTER-GRILLE ASSEMBLIES

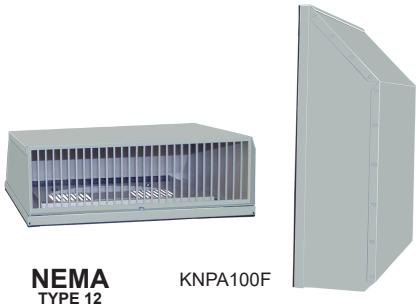

NEMA
TYPE 12
MAINTAINED

KNPA100F

DESCRIPTION

These Filter-Grille Assemblies can be used in conjunction with the Sentry Series Filter Fans for enclosure cooling. In a typical mounting orientation the motorized Filter Fan pulls air into an enclosure while the Filter-Grille Assembly functions as an outlet. Alternatively, if the reverse airflow option is chosen for the filter fan, the fan exhausts the enclosure and the Filter-Grille Assembly functions as an intake. These Filter-Grille Assemblies feature filters that are easily removed for cleaning or replacement.

STANDARD FEATURES

Baked Powder Finish
Integrated Sealing Gasket
Secure Mounting
Washable, Reuseable Filter

ACCESSORIES AND OPTIONS

- Custom Grille Colors
- Filters (Optional filters guarantee a high level of protection according to EU4, with a 94% separation efficiency according to DIN 24185 Standard)

INSIDE VIEW | BOTTOM VIEW | MOUNTING PLAN

KNPA40F

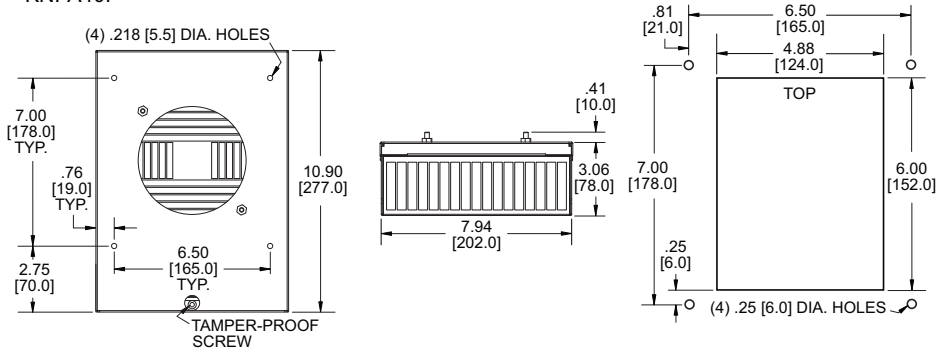

KNPA60F

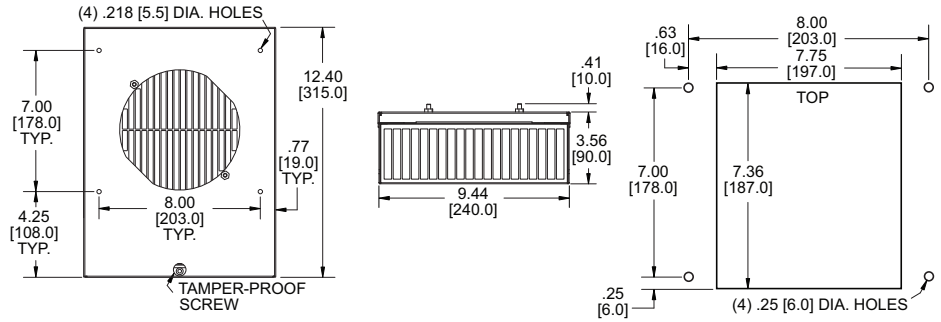

KNPA100F

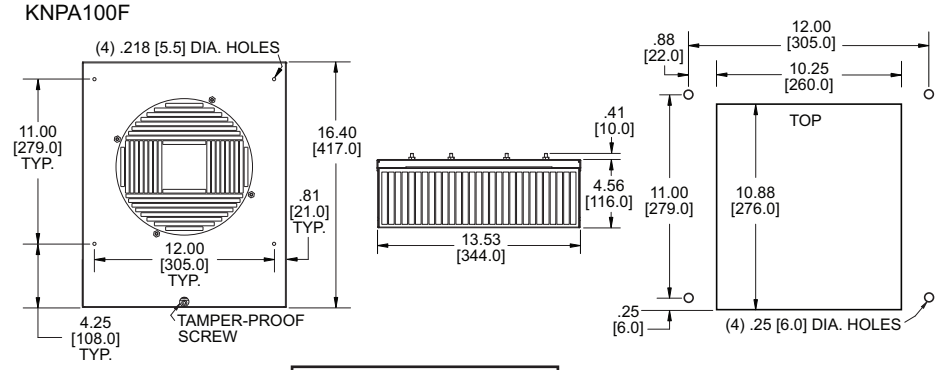

HOW TO ORDER

Specify model number.

TYPICAL MOUNTING ORIENTATIONS

(Left) Filter Fan pressurizes cabinet. Filter-Grille Assembly exhausts cabinet. (Right) Filter Fan with Reverse Option chosen. Blue arrows show direction of airflow. Boxes represent side view of electronics/electrical enclosure.

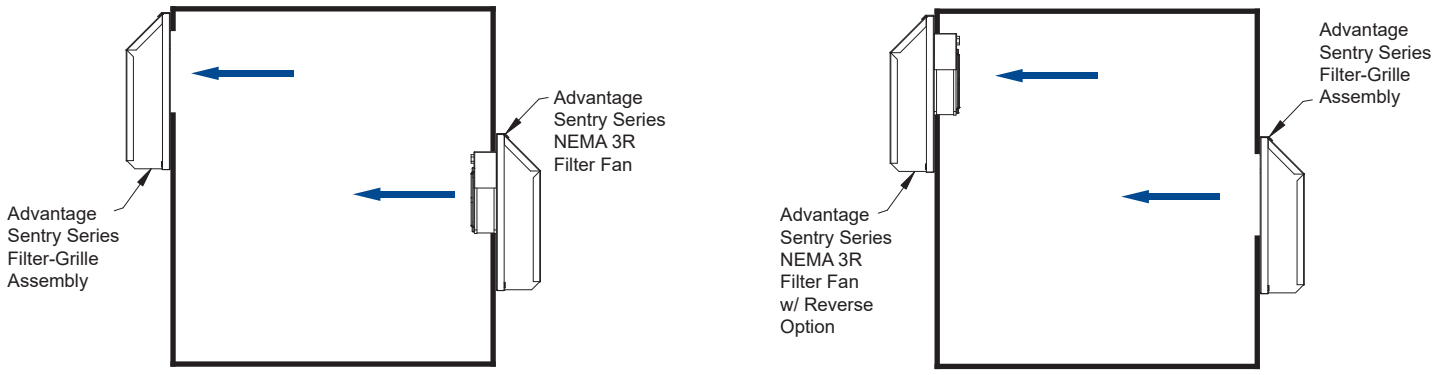

SENTRY SERIES FILTER GRILLES

GUARDIAN/GUARDIANX SERIES FILTER FANS FILTER-HOOD ASSEMBLIES

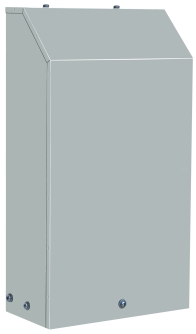

KNPA60FL

NEMA
TYPE 4 OR 4X MAINTAINED

DESCRIPTION

These Filter-Hood Assemblies can be used in conjunction with the Guardian/GuardianX Series Filter Fans for enclosure cooling. In a typical mounting orientation the motorized Filter Fan pulls air into an enclosure while the Filter-Hood Assembly functions as an outlet. Alternatively, if the reverse airflow option is chosen for the filter fan, the fan exhausts the enclosure and the Filter-Hood Assembly functions as an intake. These Filter-Hood Assemblies feature filters that are easily removed for cleaning or replacement.

STANDARD FEATURES

Baked Powder Finish
Filter
Integrated Sealing Gasket
IP55 Filter Protection
NEMA 4 or 4X Rating Maintained (If used with provided filter)
Secure Mounting
Stainless Steel Shell (NEMA 4X models)
Washable, Reuseable Filter

ACCESSORIES AND OPTIONS

- Replacement Filters (P/N: 0429-01-01)

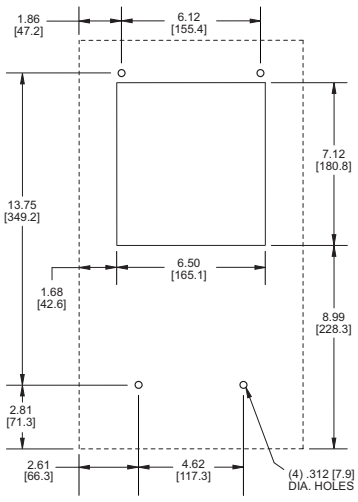

MOUNTING PLAN

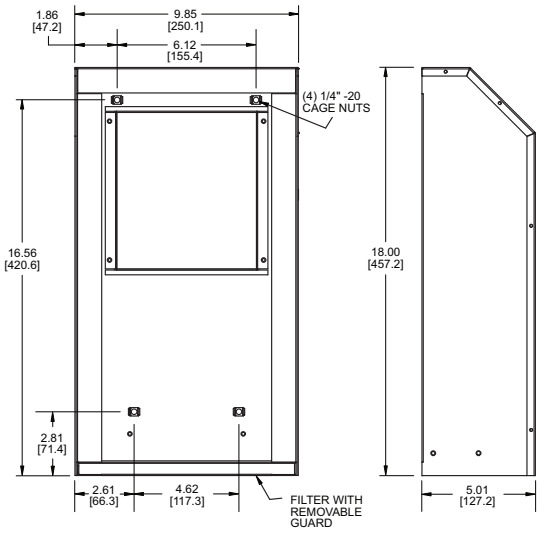

KNPA60FL(V)

HOW TO ORDER

Specify model number.

TYPICAL MOUNTING ORIENTATIONS

(Left) Filter Fan pressurizes cabinet. Filter-Hood Assembly exhausts cabinet. (Right) Filter Fan with Reverse Option chosen. Blue arrows show direction of airflow. Boxes represent side view of electronics/electrical enclosure.

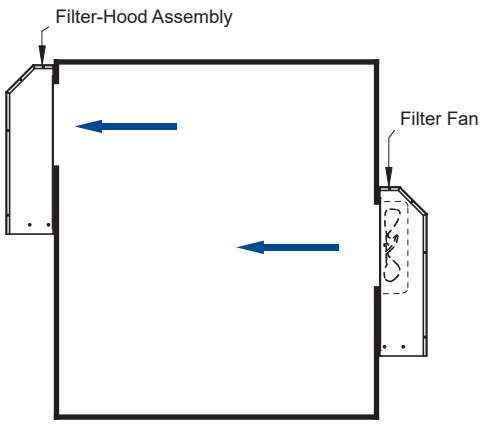

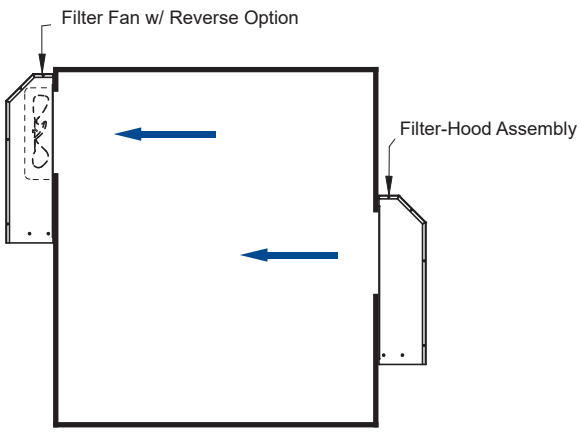



Guardian/GuardianX Series NEMA 4 or 4X Rated Air Conditioners **Page 26**



















ENCLOSURE ACCESSORIES

KOOLTRONIC offers Enclosure Accessories that control temperature and humidity as well as help to organize space in electrical enclosures and cabinets. Suitable for many applications, this selection of accessories includes **heaters**, **thermostats**, **hygrotherms, hygrostats**, **lights**, **electronic relays** and **mounting aids**.

Maintaining consistent enclosure temperatures is the key to prolonging the life of sensitive electronics and avoiding costly system failures. Both indoor and outdoor applications are subject to temperature and humidity changes that can lead to formation of condensation. When the relative humidity rises above 60% condensation will begin to form on the electronics housed in an enclosure. In order to prevent this dangerous build-up, KOOLTRONIC offers a selection of **enclosure heaters** that help maintain consistent temperatures and prolong the life of sensitive electronics. Several models of both high performance fan heaters and compact PTC heaters are available. All models are DIN rail mountable.

The heating and cooling devices used in enclosure climate control must themselves be monitored and regulated to assure the appropriate temperature and humidity conditions necessary for trouble-free operation. KOOLTRONIC **Enclosure Accessory Controls** can help achieve the ideal operating conditions even in the harshest environments. KOOLTRONIC offers an assortment of **thermostats** (Mechanical, Small and Dual Function) designed to control the air temperature inside of enclosures and control panels. **Hygrostats** are designed to control the relative air humidity inside of enclosures. **Electronic hygrotherms** sense the ambient temperature and relative air humidity. Depending on which contact combination is chosen, they then turn on or off a connected device if either the temperature is below or the humidity above a set point. **Electronic relays (24 VDC & 48 VDC)** are designed to switch high powered DC operated equipment up to 16 Amps. The 16 Amp relay contact will be closed once a pilot contact of a connected switch, i.e. a thermostat (not provided), is closed. KOOLTRONIC also offers a selection of **compact enclosure lights** designed for use in industrial enclosures and control panels. These lights offer simple and quick installation and flexibility for various mounting positions. KOOLTRONIC also offers **small accessories** designed to aid in the organization of electronic cabinets and control panels. The **enclosure receptacles** offer quick connection, are available with or without fuse and are DIN rail mountable. **KSDR/FIX** makes the mounting of smaller DIN rail mountable components easier.

KOOLTRONIC also offers **outdoor filter fan and exhaust packages** that are used in enclosures to dissipate heat harmful to sensitive electronic components. These fans feature a filter that is easily changed by opening the lockable door of the outdoor hood. IP55 protection is reached by the specially-designed hood and the use of special filters. The plastic casing is impact-resistant, weatherproof and UV resistant.

ENCLOSURE ACCESSORIES: THERMOSTATS



DESCRIPTION

These thermostats work to maintain the proper enclosure climate for the safe operation of electronic components. The heating and cooling devices used in enclosure climate control must be monitored and regulated to assure the appropriate temperature and humidity conditions necessary for trouble-free operation. KOOLTRONIC **thermostats** can help achieve the ideal operating conditions even in the harshest environments.

Dual Thermostats: Dual Thermostats house two separate thermostats, allowing the independent control of heating, cooling or other equipment.

Small Thermostats: Compact design makes these thermostats perfect for densely packed electronic enclosures.

Mechanical Thermostats: Designed to control the air temperature inside of enclosures and control panels, these thermostats can be used for enclosure heaters, cooling equipment, (e.g. filter fans), or signal devices.

24 VDC Thermostats: Designed to switch the potentially high loads (amps) of DC 24 V operated equipment.

KOOLTRONIC also designs and manufactures a variety of cooling units to meet *unique* specifications. We invite your inquiries about our modification and custom-design capabilities.

CALL 1-800-321-KOOL (5665)
or FAX 609-466-1114

THERMOSTATS

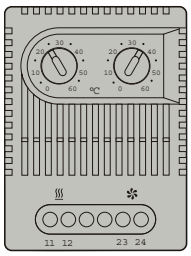

Dual
Thermostat
2.6"H x 1.9"W x 1.8"D

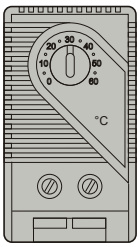

Small
Thermostat
2.3"H x 1.3"W x 1.7"D

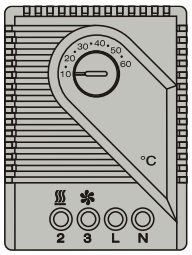

Mechanical
Thermostat
2.6"H x 1.9"W x 1.5"D

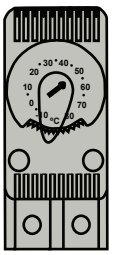

Mechanical
Thermostat
2.6"H x 1.1"W x 1.7"D

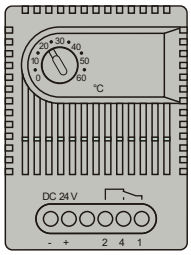

24 VDC
Thermostat
2.6"H x 1.9"W x 1.8"D

DUAL THERMOSTAT

The KSDT Dual Thermostat houses two separate thermostats, allowing the independent control of heating, cooling or other equipment. Both thermostats offer wide adjustment ranges and are color coded for easy function recognition. Patent pending.



STANDARD FEATURES

- Two thermostats in one unit
  one Normally Closed (NC) & one Normally Open (NO)
  or two Normally Open (NO)
- Each with wide adjustable range
- Available with ºF or ºC Scale
- DIN rail mountable

Model No.	NC (Red)	NO (Blue)
KSDT72	0 - 60ºC	0 - 60ºC
KSDT75	-10 - 50ºC	20 - 80ºC
KSDT72F	32 - 140ºF	32 - 140ºF
KSDT75F	14 - 122ºF	68 - 176ºF

Model No.	NO (Blue)	NO (Blue)
KSDT76	0 - 60ºC	0 - 60ºC
KSDT76F	32 - 140ºF	32 - 140ºF

Contact Kooltronic for quantity pricing.

TECHNICAL DATA

Sensor element:	Thermostatic bi-metal
Maximum tolerance:	± 7.2ºF (4K)
Switching difference (hysteresis):	12.6ºF ± 5.4ºF (7ºC ± 3K)
Switching capacity (max. Load):	NC: 10A resistive/2A inductive @ 250 VAC NO: 5A resistive/2A inductive @ 250 VAC DC 30 W
EMI/EMC compliance:	EN 55014-1-2, EN 61000-3-2, EN 61000-3-3
Connections:	4-pole terminal for AWG 14 max. (2.5 mm²)
Mounting:	Clip for 35mm DIN rail (EN 50022)
Housing:	Plastic, UL94V-0
Weight:	3.2 oz (90 g)
Protection type:	IP 20
Operating/storage temperature:	-49 to 158ºF (-45 to 70ºC)

DRAWINGS

Dimensions, inches [mm], are for reference only and are subject to change.

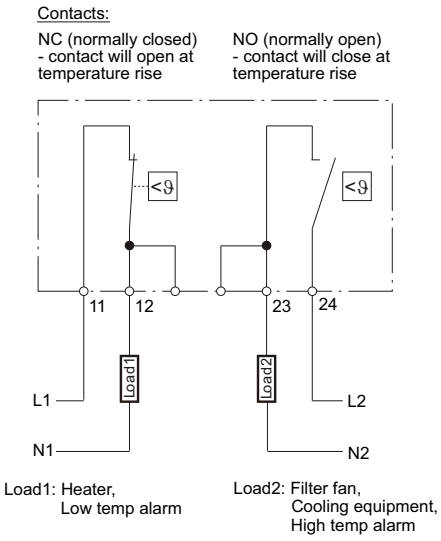

HOW TO ORDER

Specify model number.

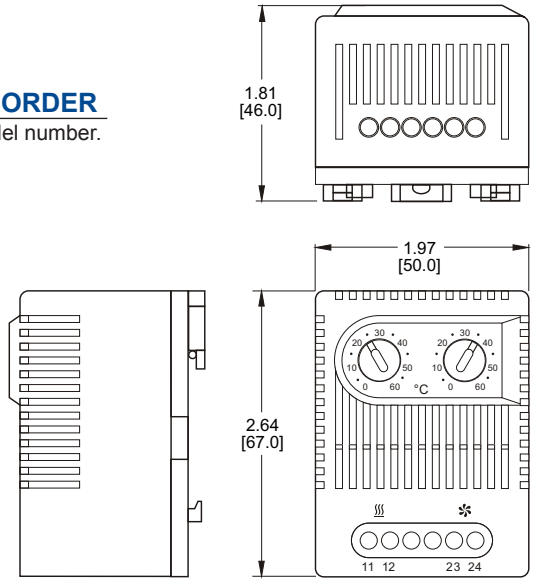

THERMOSTATS

Specifications are subject to change without notice. Suitability of this product for its intended use and any associated risks must be determined by the end customer/buyer in its final application.

SMALL THERMOSTAT



STANDARD FEATURES

- Compact design
- Wide adjustable range
- Available with °F or °C scale
- Color coded temperature dials
- DIN rail mountable

Thermostat "NC" (normally closed): Thermostat opens at temperature rise. Comes with a red temperature dial.
Thermostat "NO" (normally open): Thermostat closes at temperature rise. Comes with a blue temperature dial.

Model No.	Contact type	Scale
KSSTF	normally open	30-140ºF
KSSTCF	normally closed	30-140ºF

Contact Kooltronic for quantity pricing.

TECHNICAL DATA

Sensor element:	Thermostatic bi-metal
Maximum tolerance:	±7.2ºF (4K)
Switching difference (hysteresis):	12.6ºF ± 5.4ºF (7ºC ± 3K)
Service life:	100,000 cycles
Switching capacity (max. load):	15A resistive/2A inductive @ 120 VAC 10A resistive/2A inductive @ 250 VAC DC 30W
EMI/EMC compliance:	EN 55014-1-2, EN 61000-3-2, EN 61000-3-3
Connections:	2-pole terminal for AWG 14 max. (2.5 mm²)
Mounting:	Clip for 35 mm DIN rail (EN 50022)
Housing:	Plastic, UL94V-0
Weight:	1.27 oz (36 g)
Protection type:	IP 20
Operating/storage temperature:	-49 to 158ºF (-45 to 70ºC)

DRAWINGS

Dimensions, inches [mm], are for reference only and are subject to change.

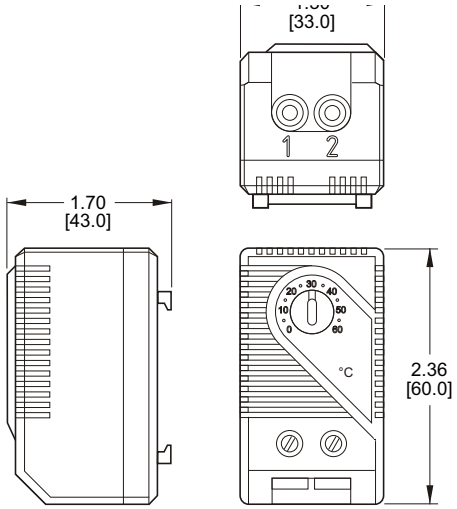

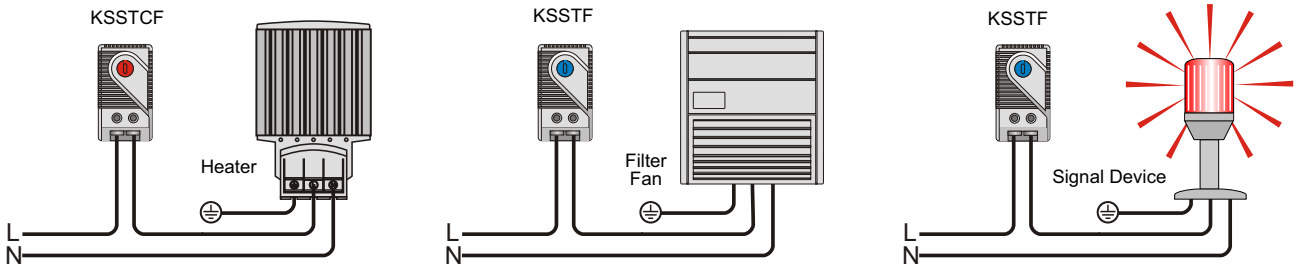

Wiring examples

HOW TO ORDER

Specify model number.

Specifications are subject to change without notice. Suitability of this product for its intended use and any associated risks must be determined by the end customer/buyer in its final application.

MECHANICAL THERMOSTAT

The KSMT Mechanical Thermostat is designed to control the air temperature inside of enclosures and control panels. It can be used for enclosure heaters, cooling equipment (e.g. filter fans), or signal devices.

An integrated resistor (*RF*) can be connected to increase accuracy when these units are used with an enclosure heater.*



STANDARD FEATURES

- Wide adjustable range
- Available with ºF or ºC Scale
- Change-over contact
- High switching capacity
- DIN rail mountable

Model No.	Voltage	Adjustment range
KSMTF	120 VAC	50-140ºF
KSMT	120 VAC	10-60ºC
K2SMTF	230 VAC	50-140ºF
K2SMT	230 VAC	10-60ºC

Contact Kooltronic for quantity pricing.

DRAWINGS

Dimensions, inches [mm], are for reference only and are subject to change.

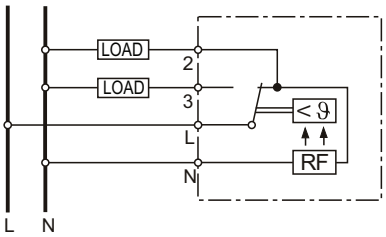

Connections:
L + 2 = heating
L + 3 = cooling
N = temperature compensation

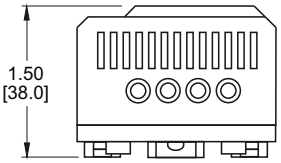

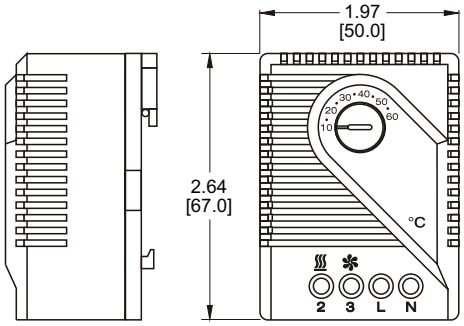

TECHNICAL DATA

Sensor element:	Thermostatic bi-metal
Switching difference:	Approx. 4K (7.2ºF), 0.5K (1ºF) with RF
Contact type:	Change-over, snap-action contact
Contact resistance:	<10mΩ
Maximum switching capacity:	Break contact 10A res./4A ind. @ 250 VAC Make contact 5A res./2A ind. @ 250 VAC
EMI/EMC conformity:	EN 55014-1-2, EN 61000-3-2, EN 61000-3-3
Connections:	4-pole terminal for AWG 14 max. (2.5 mm²)
Mounting:	Clip for 35 mm DIN rail (EN 50022)
Housing:	Plastic, UL94V-0
Weight:	3.5 oz (100 g)
Protection type:	IP 20
Operating/storage temperature:	-49 to 158ºF (-45 to 70ºC)

* Optional connection of terminal "N" will cause the *RF* heating resistor to work, thus reducing the difference between actual enclosure temperature and the temperature reading inside the thermostat (switch-off temperature).

HOW TO ORDER

Specify model number.

Specifications are subject to change without notice. Suitability of this product for its intended use and any associated risks must be determined by the end customer/buyer in its final application.

MECHANICAL THERMOSTAT



The KFST Mechanical Thermostat is designed to control the air temperature inside of enclosures and control panels. It can be used for enclosure heaters, cooling equipment (e.g. filter fans), or signal devices.

STANDARD FEATURES

- Wide adjustable range
- Available with ºF or ºC Scale
- Change-over contact
- High switching capacity
- DIN rail mountable

Model No.	Voltage	Control Type	Dial Color	Adjustment range
KFSTF	110-250 VAC	Normally Open	Blue	-14 - +176ºF
KFSTCF	110-250 VAC	Normally Closed	Red	-14 - +176ºF
KFST	110-250 VAC	Normally Open	Blue	-10 - +80ºC
KFSTC	110-250 VAC	Normally Closed	Red	10 - +80ºC

Contact Kooltronic for quantity pricing.

TECHNICAL DATA

Sensor element:	Thermostatic bi-metal
Contact type:	Change-over, snap-action contact
Connections:	Screw terminal for AWG 14 max. (2.5 mm²)
Mounting:	Snap on 35 mm DIN rail (EN 50022)
Housing:	PA66 - self extinguishing UL94V-0
Protection type:	IP - 20 EN 60529
Operating/storage temperature:	-40 to 194ºF (-40 to 90ºC)
Rated Current:	10A
Contact Current Carrying Capacity:	15A
Accuracy:	± 3ºC
Differential:	NC: - 3ºC NO: +4 if A ≤ 5 / +7 if A ≥ 5

HOW TO ORDER

Specify model number.

WIRING DIAGRAMS

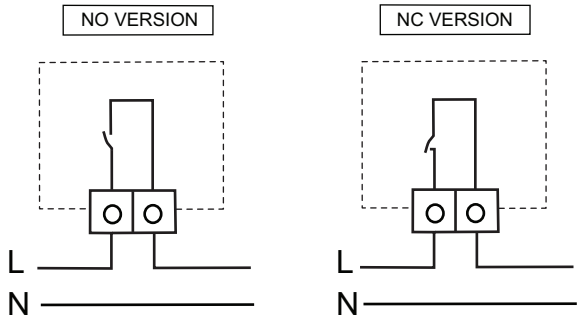

DRAWINGS

Dimensions, inches [mm], are for reference only and are subject to change.

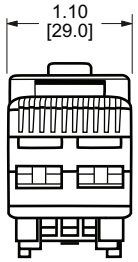

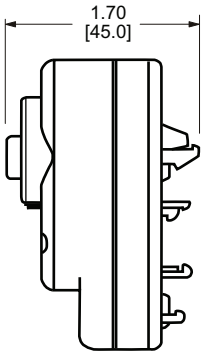

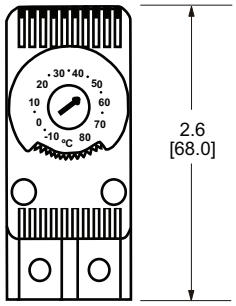

THERMOSTATS

Specifications are subject to change without notice. Suitability of this product for its intended use and any associated risks must be determined by the end customer/buyer in its final application.

24VDC ELECTRONIC THERMOSTAT

The KS7ET is an electronic thermostat designed to switch the potentially high loads (amps) of DC 24 V operated equipment. With its potential-free change-over contact, a wide variety of products can be switched, i.e. heating/cooling equipment as well as signal devices.

A relatively small hysteresis sets the KS7ET Thermostat apart from less accurate mechanical thermostats.



STANDARD FEATURES

- 16 Amp DC switching capacity
- Low hysteresis
- Adjustable temperature
- Available in ºF or ºC scale
- Change-over contact
- DIN rail mountable

Model No.	Temperature range
KS7ET	0-60ºC
KS7ETF	32-140ºF

Contact Kooltronic for quantity pricing.

DRAWINGS

Dimensions, inches [mm], are for reference only and are subject to change.

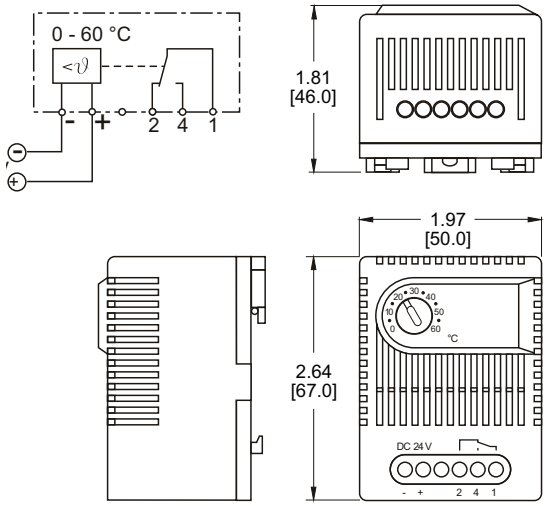

TECHNICAL DATA

Switching difference (hysteresis):	Approx. 5.4ºF (3K)
Sensor element:	PTC
Contact type:	Change-over
Contact resistance:	< 10mΩ
Service life:	> 100,000 cycles
Max. switching capacity:	16A @ DC 28 V (resistive load)
EMI/EMC compliance:	EN 55014-1-2, EN 61000-3-2, EN 61000-3-3
Connection:	5-pole terminal for AWG 14 max. (2.5 mm²)
Mounting:	Clip for 35 mm DIN rail (EN 50022)
Housing:	Plastic, UL94V-0
Weight:	Approx. 2.8 oz. (80 g)
Mounting position:	Vertical
Operating/storage temperature:	-49 to 158ºF (-45 to 70ºC)
Protection type:	IP 20

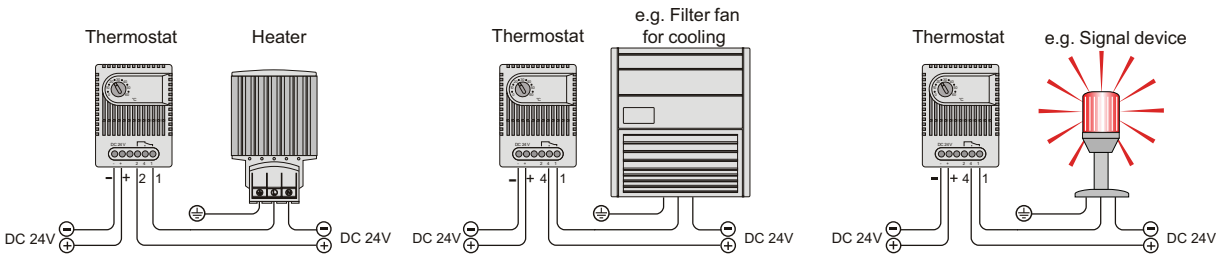

Wiring examples

HOW TO ORDER

Specify model number.

THERMOSTATS

Specifications are subject to change without notice. Suitability of this product for its intended use and any associated risks must be determined by the end customer/buyer in its final application.

ENCLOSURE ACCESSORIES: HYGROSTATS



DESCRIPTION

These electronic hygrostats are designed to control the relative humidity inside of enclosures. When connected to an enclosure heater, (de-humidifier), they will turn the heater on at a set humidity level in order to raise the dew point. These units can be also be used to control cooling fans, warning lights or other devices.

KOOLTRONIC also designs and manufactures a variety of cooling units to meet *unique* specifications. We invite your inquiries about our modification and custom-design capabilities.

CALL 1-800-321-KOOL (5665)
or FAX 609-466-1114

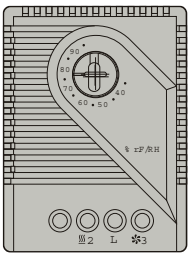

Mechanical
Hygrostat
2.6"H x 1.9"W x 1.5"D

MECHANICAL HYGROSTAT, CHANGE-OVER CONTACT

The KSMH is designed to control the relative air humidity inside of enclosures. When connected to an enclosure heater, (de-humidifier), it will turn the heater on at the set humidity level in order to raise the dew point. This helps prevent damage and malfunction of electronic components caused by condensation and corrosion.[1)] The KSMH can also be used to control cooling fans, warning lights or other devices.



Contact Kooltronic for quantity pricing.

STANDARD FEATURES

- Adjustable relative humidity range
- High switching capacity
- DIN rail mountable

[1)] The critical relative humidity for most components is 65%. Above 65% RH, condensation can cause malfunction of electronic equipment. Long-term, this can lead to corrosion and permanent damage of electronic components and systems.

TECHNICAL DATA

Model Number:	KSMH
Adjustment range:	35 - 95% (± 3.0%) relative humidity
Switching difference (hysteresis):	Approx. 4% RH @ 50% relative humidity
Permissible air velocity:	50 ft/sec (15 m/s)
Maximum switching voltage:	250 VAC (NOTE: 250 V should only be switched in a non-condensing environment!)
Contact type:	Change-over contact
Contact resistance:	<10mΩ
Service life:	50,000 cycles
Minimum switching capacity:	100mA @ AC/DC 20 V
Maximum switching capacity:	5A @ AC 230 V (resistive load) 0.2A @ AC 230 V (inductive load at cos φ = 0.8) DC 20W
EMI/EMC compliance:	EN 55014-1-2, EN 61000-3-2, EN 61000-3-3
Connection:	3-pole terminal, 3 x AWG 14 max. (2.5 mm²)
Mounting:	Clip for 35 mm DIN rail (EN 50022)
Housing:	Plastic, UL94V-0
Weight:	2 oz. (60 g)
Operating temperature:	32 to 140ºF (0 to 60ºC)
Storage temperature:	-4 to 176ºF (-20 to 80ºC)
Protection type:	IP 20
Application examples:	Electrical & Electronic enclosures Telecommunication systems Display panels Ticket dispensers Automatic teller machines (ATM's) Access & Parking control systems

DRAWINGS

Dimensions, inches [mm], are for reference only and are subject to change.

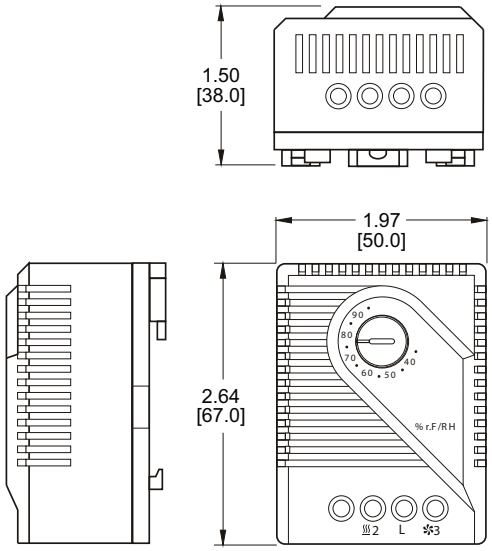

HOW TO ORDER

Specify model number.

Specifications are subject to change without notice. Suitability of this product for its intended use and any associated risks must be determined by the end customer/buyer in its final application.

ENCLOSURE ACCESSORIES:
ELECTRONIC HYGROTHERM



DESCRIPTION

The KSHTC Hygrotherm senses the ambient temperature and relative air humidity. Depending on which contact combination is chosen, it then turns on or off a connected device if either the temperature is below, or the humidity is above the set point. The integrated LED in each adjustment knob is lit indicating the active function.

KOOLTRONIC also designs and manufactures a variety of cooling units to meet *unique* specifications. We invite your inquiries about our modification and custom-design capabilities.

CALL 1-800-321-KOOL (5665)
or FAX 609-466-1114

HYGROTHERMS

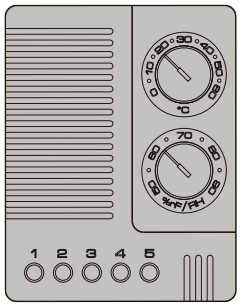

Electronic
Hygrotherm
3.0"H x 2.3"W x 1.7"D

ELECTRONIC HYGROTHERM

The KSHTC Hygrotherm senses the ambient temperature and relative air humidity. Depending on which contact combination is chosen, it then turns on or off a connected device if either the temperature is below, or the humidity above the set point. The integrated LED in each adjustment knob is lit indicating the active function.



STANDARD FEATURES

- Controls both temperature and humidity
- Optical function displays
- High switching capacity
- DIN rail mountable

Model	Power	Scale
KSHTCF	120-230 VAC, 50/60 Hz	°F / % RH
K2SHTC	120-230 VAC, 50/60 Hz	°C / % RH
K7SHTC	24-48 VDC	°C / % RH

Contact Kooltronic for quantity pricing.

TECHNICAL DATA

Temperature range:	32-140°F (0-60°C) adjustable
Humidity range:	50-90% RH adjustable
Switching difference (temperature):	approximately 3.6°F (2K) ± 1K tolerance
Switching difference (humidity):	approximately 4% RH ± 1% tolerance
Response time:	approximately 5 sec.
Contact type:	Change-over contact
Relay output (max. switching capacity):	10 A resistive / 1.6 A inductive @ AC 240 V 0.6 A @ DC 60 V[1]
Max. inrush current	AC 30 A for 10 sec.
Service life:	>30,000 cycles
Function control light:	LED
Connections:	5-pole terminal for AWG 14 max (2.5 mm)[2]
Mounting:	Clip for 35 mm DIN rail (EN 60715)
Housing:	Plastic, UL94V-0
Weight:	Approx. 3.5 oz (100g)
Mounting position:	Vertical
Operating temperature:	-40 to 140°F (-40 to 60°C)
Storage temperature:	-40 to 140°F (-40 to 60°C)
Protection type:	IP 20

[1]Not UL confirmed.
[2]When connecting with stranded wires, wire end ferrules must be used.

DRAWINGS

Dimensions, inches [mm], are for reference only and are subject to change.

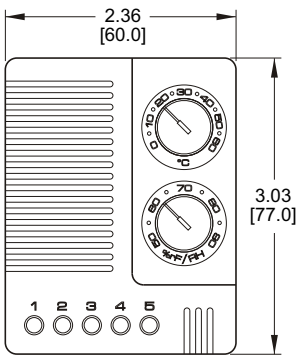

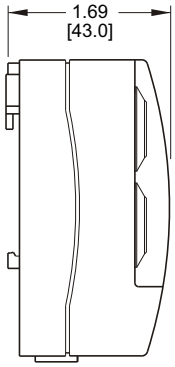

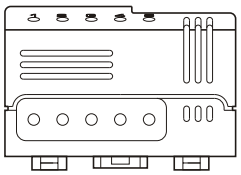

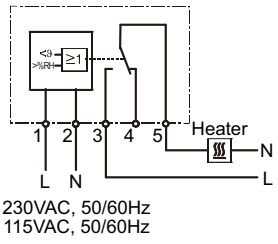

Connection diagram

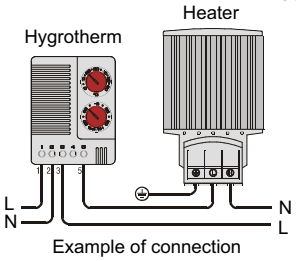

Example of connection

Input: Contacts 1 & 2: Supply voltage (120 VAC or 230 VAC)
Relay output: Contacts 3 & 5 and contacts 4 & 5 (see table below)

Contacts	close at …	open at …	use for
3 and 5	humidity rise or temperature drop	humidity drop or temperature rise	heaters de-humidifiers low-temp alarms
4 and 5	humidity drop or temperature rise	humidity rise or temperature drop	cooling humidifiers high-temp alarms

HOW TO ORDER

Specify model number.

HYGROTHERMS

Specifications are subject to change without notice. Suitability of this product for its intended use and any associated risks must be determined by the end customer/buyer in its final application.

ENCLOSURE ACCESSORIES: FAN HEATERS



DESCRIPTION

These high performance Fan Heaters and compact Enclosure Heaters prevent formation of condensation and maintain minimum operating temperatures in enclosures. These accessories help to prevent failure of electronic components caused by condension and corrosion.

These Fan Heaters offer from 100 - 950 Watts. Compact PTC Fan Heaters offer from 400 - 650 Watts.

KOOLTRONIC also designs and manufactures a variety of cooling units to meet *unique* specifications. We invite your inquiries about our modification and custom-design capabilities.

CALL 1-800-321-KOOL (5665)
or FAX 609-466-1114

FAN HEATERS



Extruded Aluminum
Compact Fan Heater
7.2"H x 3.9"W x 3.1"D
8.7"H x 3.9"W x 3.1"D

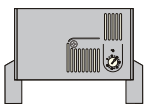

Foot Mount
Fan Heater
3.9"H x 5.7"W x 6.6"D

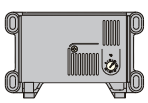

Panel Mount
Fan Heater
3.9"H x 6.3"W x 7.7"D

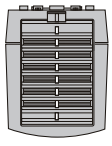

Compact PTC
Fan Heater
5.0"H x 3.9"W x 6.5"D

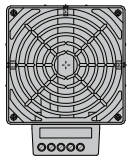

Compact
Fan Heater
1.8"H x 4.6"W x 5.9"D
1.8"H x 3.1"W x 4.4"D

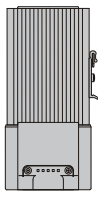

Extruded Aluminum
Compact Fan Heater
7.2"H x 3.9"W x 3.1"D
8.7"H x 3.9"W x 3.1"D

KSEHT ELECTRIC FAN HEATER WITH THERMOSTAT

These compact high-performance fan heater prevent formation of condensation and provides an evenly distributed interior air temperature in outdoor enclosures and control cabinets - especially under extreme climatic conditions. The foot mounting capability allows installation on the base panel of enclosures.

These heaters feature brushed metal housings and include an auto fan control switch to prolong motor life. A pilot light indicates “Heat On” condition.



Model	Voltage	Hz.	Heating Power (Watts)*	Airflow CFM**	Dimensions (HxWxD) (Inches)	Weight lbs.
KSEHT125	115	50/60	125	16	5.5x4.0x4.5	1.8
KSEHT200	115	50/60	200	16	5.5x4.0x4.5	1.8
KSEHT400	115	50/60	400	26	7.5x4.0x4.5	3.0
KSEHT800	115	50/60	800	26	7.5x4.0x4.5	3.0
K2SEHT125	230	50/60	125	16	5.5x4.0x4.5	1.8
K2SEHT200	230	50/60	200	16	5.5x4.0x4.5	1.8
K2SEHT400	230	50/60	400	26	7.5x4.0x4.5	3.0
K2SEHT800	230	50/60	800	26	7.5x4.0x4.5	3.0

* At 50ºF.

** Free blowing.

Contact Kooltronic for quantity pricing.

Applications:
Electrical & Electronic Enclosures
Telecommunications Systems
Display Panels
Personnel Environmental Booths
Automatic Teller Machines (ATM’s)
Access & Parking Control Systems
Ticket Dispensers

TECHNICAL DATA

Overheat protection:	Built-in temperature limiter
Operating Temperature Range:	-4ºF to 104ºF
Housing:	Brushed metal housing
Connection:	3-pole terminal, AWG 14 max. (2.5 mm²)
Mounting:	Screws (not included)
Mounting position:	Vertical

STANDARD FEATURES

Designed to prevent condensation or maintain a minimum temperature inside an electrical enclosure
Built-in thermostat (settings from 0ºF to 100ºF)
Brushed metal housing
Includes an auto fan control switch to prolong motor life
Low weight and low maintenance
Designed for easy panel mounting
Pilot light for “Heat On” indication
Integrated overheat protection

DRAWINGS

Dimensions, inches [mm], are for reference only and are subject to change.

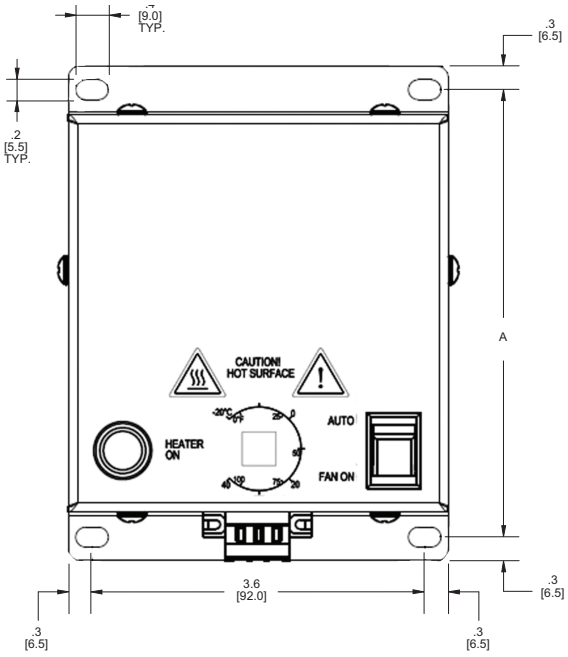

DIMENSIONS Inches, [mm]

	KSHET 125/200	KSHET 400/800
A	5 [127.0]	7 [177.8]

HOW TO ORDER

Specify model number.

FAN HEATERS

Specifications are subject to change without notice. Suitability of this product for its intended use and any associated risks must be determined by the end customer/buyer in its final application.

FOOT-MOUNT HIGH PERFORMANCE FAN HEATER

The compact high-performance fan heater prevents formation of condensation and provides an evenly distributed interior air temperature in outdoor enclosures and control cabinets - especially under extreme climatic conditions. The foot mounting capability allows installation on the base panel of enclosures.

The plastic enclosure provides double insulation which acts as protection against contact. These Fan Heaters include an integrated thermostat or hygrostat for temperature or humidity control.



Model No.	Operating Voltage	Heating Capacity	Setting Range
K2SFH950AT	230 V, 50/60 Hz	950W	0 - 60ºC
K2SFH950FHS	230 V, 50/60 Hz	950W	65% RH

Contact Kooltronic for quantity pricing.

TECHNICAL DATA

Heating power:	See above
Heating element:	High performance cartridge heater
Heat sink:	Extruded aluminum profile
Overheat protection:	Built-in temperature limiter
Axial fan:	Ball bearing Service life 50,000h at 77ºF (25ºC)
Airflow, free blowing:	94 cfm (160 m³/h)
Connection:	2-pole terminal, AWG 14 max. (2.5 mm²) with integral strain relief
Wiring compartment:	Plastic, UL94V-0, black
Weight:	3.1 lbs. (1.4 kg)
Mounting:	M5 screws (not included)
Position:	Preferably horizontal
Operating/storage Temperature:	-49 to 158ºF (-45 to 70ºC)
Protection class:	II (double insulated)
Protection type:	IP 20

DRAWINGS

Dimensions, inches [mm], are for reference only and are subject to change.

HOW TO ORDER

Specify model number.

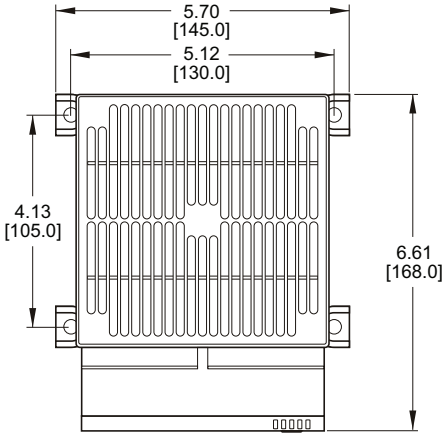

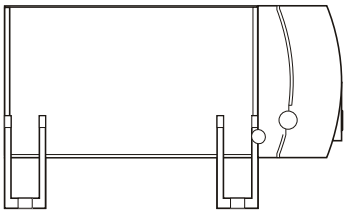

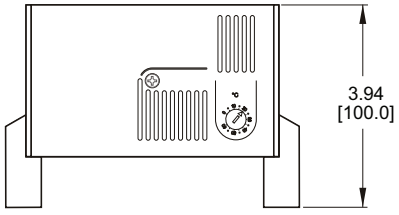

FAN HEATERS

Specifications are subject to change without notice. Suitability of this product for its intended use and any associated risks must be determined by the end customer/buyer in its final application.

PANEL-MOUNT HIGH PERFORMANCE FAN HEATER



The compact high-performance fan heater prevents formation of condensation and provides an evenly distributed interior air temperature in outdoor enclosures and control cabinets - especially under extreme climatic conditions. These fan heaters offer easy panel or DIN rail mounting with a single versatile rear bracket.

The plastic enclosure provides double insulation which acts as protection against contact. These units include an integrated thermostat or hygrostat for temperature or humidity control.

Model No.	Operating Voltage	Heating Capacity	Setting Range
K2SFHP950AT	230 V, 50/60 Hz	950W	0 - 60ºC
K2SFHP950FHS	230 V, 50/60 Hz	950W	65% RH

Contact Kooltronic for quantity pricing.

TECHNICAL DATA

Heating power:	See above
Heating element:	High performance cartridge heater
Heat sink:	Extruded aluminum profile
Overheat protection:	Built-in temperature limiter
Axial fan:	Ball bearing Service life 50,000h at 77ºF (25ºC)
Airflow, free blowing:	94 cfm (160 m³/h)
Connection:	2-pole terminal, AWG 14 max. (2.5 mm²) with integral strain relief
Wiring compartment:	Plastic, UL94V-0, black
Weight:	3.1 lbs. (1.4 kg)
Mounting:	Clip for 35 mm DIN rail (EN 50022) or screw mount
Position:	Preferably horizontal
Operating/storage temperature:	-49 to 158ºF (-45 to 70ºC)
Protection class:	II (double insulated)
Protection type:	IP 20

DRAWINGS

Dimensions, inches [mm], are for reference only and are subject to change.

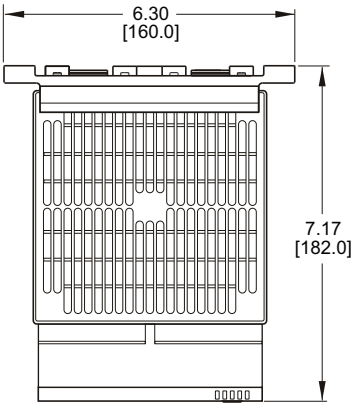

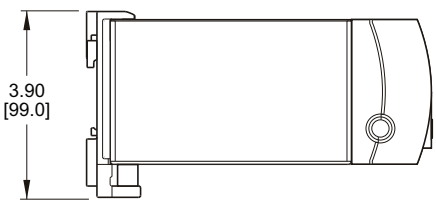

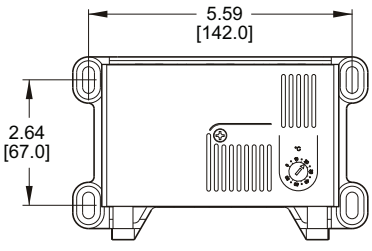

HOW TO ORDER

Specify model number.

FAN HEATERS

Specifications are subject to change without notice. Suitability of this product for its intended use and any associated risks must be determined by the end customer/buyer in its final application.

PTC FAN HEATER



STANDARD FEATURES

- Compact fan heater in PTC technology
  Maintains minimum operating temperatures in enclosures
  Helps to prevent failure of electronic components caused by condensation and corrosion
- Heating power adjusts to ambient temperature
- Integrated adjustable thermostat and control light
- DIN rail mountable

Contact Kooltronic for quantity pricing.

Model No.	Voltage	Heating capacity (@ 50Hz)*	Heating capacity (@ 60Hz)*	Max. current (inrush)	Axial Fan (ball bearing)	Thermostat range	Weight
KSFH550AT	100-120VAC	400W	550W	14A	20 cfm (35 m³/h)	32 - 140ºF	2 lbs/0.9 kg
KSFH650AT	100-120VAC	510W	650W	15A	26 cfm (45 m³/h)	32 - 140ºF	2.4 lbs/1.1 kg
K2SFH400AT	220-240VAC	475W	550W	11A	20 cfm (35 m³/h)	0 - 60ºC	2 lbs/0.9 kg
K2SFH550AT	220-240VAC	550W	650W	13A	26 cfm (45 m³/h)	0 - 60ºC	2.4 lbs/1.1 kg

*at 68ºF (20ºC) ambient temperature.

DRAWINGS

Dimensions, inches [mm], are for reference only and are subject to change.

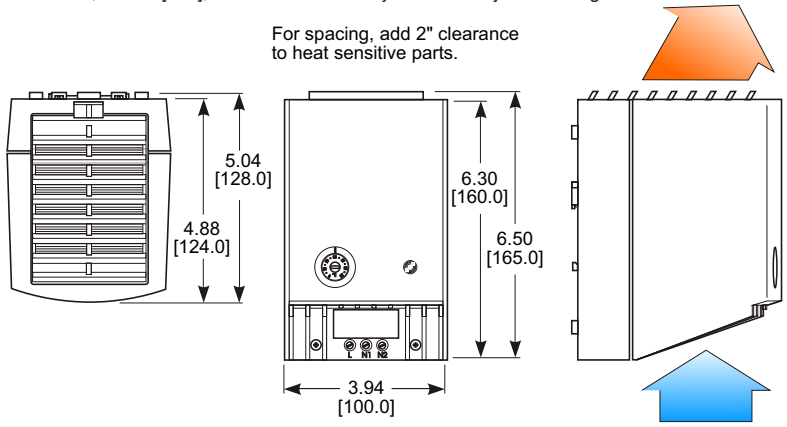

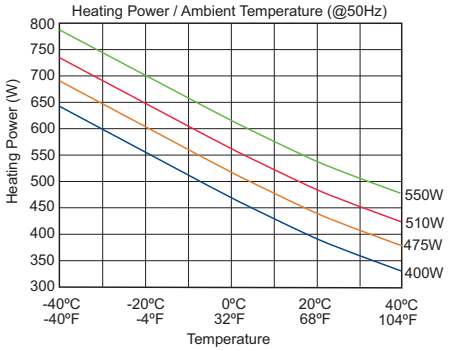

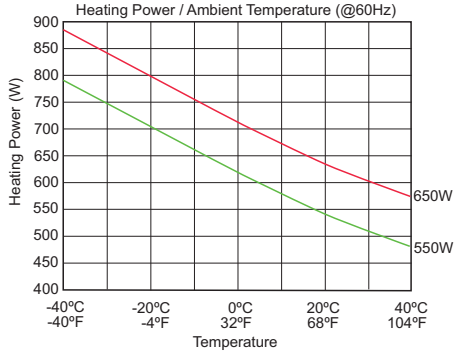

TECHNICAL DATA

Heating element:	PTC-semiconductor/resistor, self-regulating with changing ambient temperature (see graph)
Overheat protection:	Built-in temperature limiter in case of fan failure
Function control light:	LED
Housing:	Plastic, UL94V-0
Connection:	2-pole terminal, AWG 14 max. (2.5 mm²)
Mounting:	Clip for 35mm DIN rail (EN 50022)
Protection class:	II (double insulated)
Protection type:	IP 20

Determining the required heater size:

$$P_H = (A \times \Delta T \times k) - P_V$$

P_H = Required heating power for your application in Watts (W)

P_V = Heating power generated by existing components (e.g. a transformer) in Watts (W)

A = Exposed enclosure surface area in square meters (m²)

ΔT = Temperature differential between the desired minimum interior temperature and the lowest possible external temperature of the enclosure in Kelvin (K), 1.8ºF = 1ºC = 1K

k = Heat transmission coefficient of the enclosure material used:

Painted steel:	5.5W/m²K
Stainless steel:	3.7W/m²K
Aluminum:	12W/m²K
Polyester/Plastic:	3.5W/m²K

For outdoor applications it is recommended to double the heating power.

Applications:

Access & Parking control systems
Display panels
Personnel environmental booths
Ticket dispensers
Automatic teller machines (ATM's)
Electrical & Electronic enclosures
Telecommunications systems

HOW TO ORDER

Specify model number.

FAN HEATERS

Specifications are subject to change without notice. Suitability of this product for its intended use and any associated risks must be determined by the end customer/buyer in its final application.

COMPACT FAN HEATER

STANDARD FEATURES

- Small, compact size fan heater
  Maintains minimum operating temperatures in enclosures
  Helps to prevent failure of electronic components caused by condensation and corrosion
- Built-in overheat protection
- Heater can be purchased separately for OEM use*
- DIN rail mountable

Contact Kooltronic for quantity pricing.





	Model Number			
	Complete Fan Heater		Heater Only	
Watts	120 VAC	230 VAC	120 VAC	230 VAC
100W	KSFHL100	K2SFHL100	KSEHV100	K2SEHV100
150W	KSFHL150	K2SFHL150	KSEHV150	K2SEHV150
200W	KSFHL200	K2SFHL200	KSEHV200	K2SEHV200
300W	KSFHL300	K2SFHL300	KSEHV300	K2SEHV300
400W	KSFHL400	K2SFHL400	KSEHV400	K2SEHV400

Applications:
Electrical & Electronics enclosures
Telecommunications systems
Display panels
Personnel environmental booths
Automatic teller machines (ATM's)
Access & Parking control systems
Ticket dispensers

TECHNICAL DATA

Heating element:	Resistance type cartridge heater
Heat sink:	Die-cast aluminum, glass bead finish
Required fan size: (included with KSFHL heaters)	100/150W: 80 x 80 x 25 mm min. air flow: 20 cfm (35 m³/h) 200/300/400W: 120 x 120 x 25 mm min. airflow: 63 cfm (108 m³/h)
Overheat protection:	Built-in temperature limiter
Air exit temperature:	Approx. 113ºF (45ºC) 2"(50 mm) above heater
Wiring compartment:	Plastic UL 94V-0
Connection (heater):	3-pole terminal, AWG 14 max. (2.5 mm²)
Connection (axial fan):	2-pole terminal (L2/N2), AWG 14 max. (2.5 mm²)
Mounting:	Clip for 35 mm DIN rail (EN 50022)
Protection class:	I (grounded)
Protection type:	IP 20
Weight:	100/150W: 0.6 lbs (240 g) without fan 200/300/400W: 1.1 lbs (490 g) without fan

Determining the required heater size:

$$P_H = (A \times \Delta T \times k) - P_V$$

P_H = Required heating power for your application in Watts (W)

P_V = Heating power generated by existing components (e.g. a transformer) in Watts (W)

A = Exposed enclosure surface area in square meters (m²)

ΔT = Temperature differential between the desired minimum interior temperature and the lowest possible external temperature of the enclosure in Kelvin (K), 1.8ºF = 1ºC = 1K

k = Heat transmission coefficient of the enclosure material used:
Painted steel: 5.5W/m²K
Stainless steel: 3.7W/m²K
Aluminum: 12W/m²K
Polyester/Plastic: 3.5W/m²K

For outdoor applications it is recommended to double the heating power.

HOW TO ORDER

Specify model number.

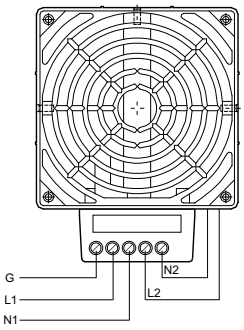

KSFHL WIRING DIAGRAM

DRAWINGS

Dimensions, inches [mm], are for reference only and are subject to change.

100W/ 150W Heater

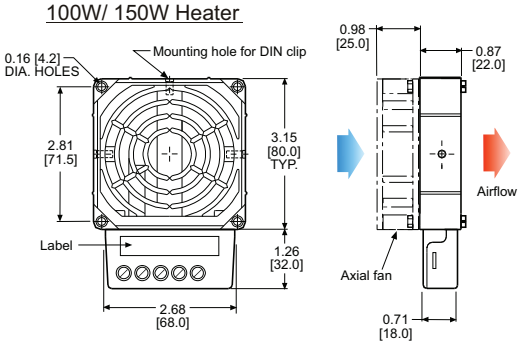

200W/ 300W/ 400W Heater

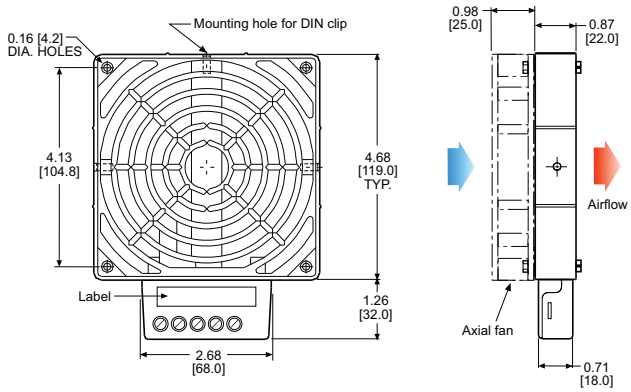

*Caution: Heater may only be operated with fan!

FAN HEATERS

Specifications are subject to change without notice. Suitability of this product for its intended use and any associated risks must be determined by the end customer/buyer in its final application.

EXTRUDED ALUMINUM COMPACT FAN HEATER



STANDARD FEATURES

- Compact fan heater for increased heat output
  Maintains minimum operating temperatures in enclosures
  Helps to prevent failure of electronic components caused by condensation and corrosion
- Built-in overheat protection
- DIN rail mountable

Contact Kooltronic for quantity pricing.

Model No.	Operating voltage	Heating capacity	Length (L)	Weight (approx.)
KSFH250	AC 120 V, 50/60 Hz	250W	7.2” (182 mm)	2.4 lbs (1.1 kg)
KSFH400	AC 120 V, 50/60 Hz	400W	8.7” (222 mm)	3.1 lbs (1.4 kg)
K2SFH250	AC 230 V, 50/60 Hz	250W	7.2” (182 mm)	2.4 lbs (1.1 kg)
K2SFH400	AC 230 V, 50/60 Hz	400W	8.7” (222 mm)	3.1 lbs (1.4 kg)

TECHNICAL DATA

Heating element:	Resistance type heater (micanite)
Heat sink:	Extruded aluminum profile, silver anodized
Surface temperature:	Max. 167ºF (75ºC) - 400W heater
Overheat protection:	Built-in temperature limiter
Axial fan:	Ball bearing, 50,000h at 77ºF (25ºC)
Air flow, free blowing:	26 cfm (45 m³/h) - 50 Hz; 32 cfm (54 m³/h) - 60Hz
Connection:	Internal term. AWG 16 max (1.5 mm²), w/strain relief
Mounting:	Clip for 35 mm DIN rail (EN 50022)
Operating/storage temperature:	-49 to 158ºF (-45 to 70ºC)
Protection class:	I (grounded)
Protection type:	IP 20

DRAWINGS

Dimensions, inches [mm], are for reference only and are subject to change.

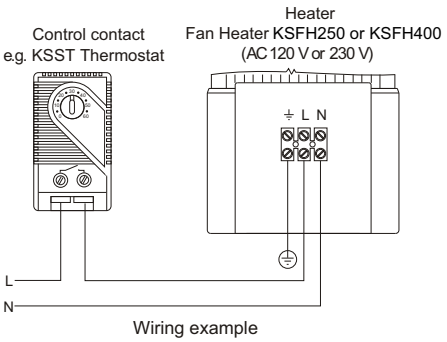

Wiring example

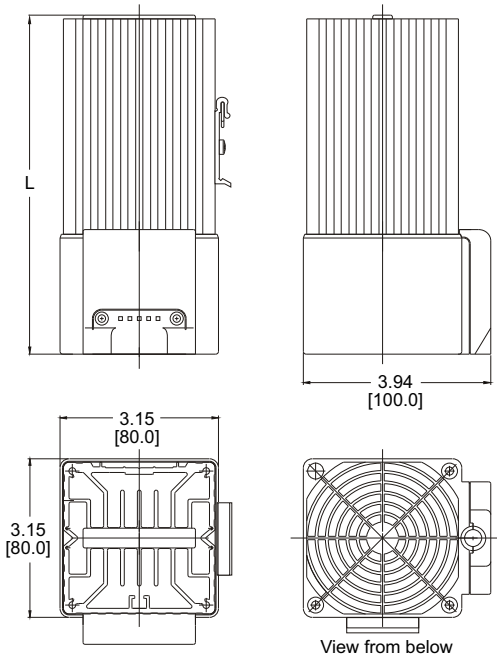

View from below

HOW TO ORDER

Specify model number.

Specifications are subject to change without notice. Suitability of this product for its intended use and any associated risks must be determined by the end customer/buyer in its final application.

ENCLOSURE ACCESSORIES: PTC HEATERS

DESCRIPTION

These compact PTC Heaters offer from 10 - 150 Watts.



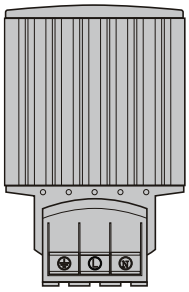

KSEH
PTC Heater
2.6"H x 2.7"W x 2.3"D
5.5"H x 2.7"W x 2.3"D
8.7"H x 2.7"W x 2.3"D

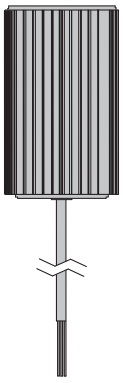

KFEHK
PTC Heater
4.1"H x 2.4"W x 2.5"D
6.1"H x 2.4"W x 2.5"D
9.1"H x 2.4"W x 2.5"D

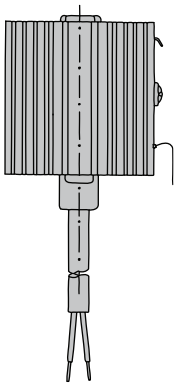

KSEHK
PTC Heater
2.0"H x 1.9"W x .98"D
2.8"H x 1.9"W x .98"D
4.0"H x 1.9"W x .98"D
2.4"H x 1.9"W x .98"D

PTC HEATER



Model Number 120-240VAC	Power*	Rated Current	Max. Current**	Length (L)	Weight
KSEH15	15W	0.08A	1.5A	2.6”/65 mm	0.66 lbs (0.3 kg)
KSEH30	30W	0.15A	3.0A	2.6”/65 mm	0.66 lbs (0.3 kg)
KSEH45	45W	0.23A	3.5A	2.6”/65 mm	0.66 lbs (0.3 kg)
KSEH60	60W	0.30A	2.5A	5.5”/140 mm	1.10 lbs (0.5 kg)
KSEH75	75W	0.38A	4.0A	5.5”/140 mm	1.10 lbs (0.5 kg)
KSEH100	100W	0.50A	4.5A	5.5”/140 mm	1.10 lbs (0.5 kg)
KSEH150	150W	0.15A	9.0A	8.7”/220 mm	1.76 lbs (0.8 kg)

12-36VDC	Power*	Rated Current	Max. Current**	Length (L)	Weight
K7SEH15	15W	0.63A	9.A	2.6”/65 mm	0.66 lbs (0.3 kg)▼
K7SEH30	30W	1.25A	14.A	2.6”/65 mm	0.66 lbs (0.3 kg)▼
K7SEH30	45W	1.88A	8.A	2.6”/65 mm	0.66 lbs (0.3 kg)▼
K7SEH30	60W	2.50A	10.A	5.5”/140 mm	0.88 lbs (0.4 kg)▼
K7SEH75	75W	3.13A	14A	5.5”/140 mm	1.10 lbs (0.5 kg)▼
K7SEH100	100W	4.17A	16A	5.5”/140 mm	1.10 lbs (0.5 kg)▼
K7SEH150	150W	6.25A	23A	8.7”/220 mm	1.65 lbs (.75 kg)▼

* At 68ºF (20ºC) ambient temperature
** Inrush current
▼ Not CUR/US Approved

Contact Kooltronic for quantity pricing.

HOW TO ORDER

Specify model number.

STANDARD FEATURES

- Compact heater in PTC technology
  Maintains minimum operating temperatures in enclosures
  Helps to prevent failure of electronic components caused by condensation and corrosion
- Heating power adjusts to ambient temperature
- Push connectors for quick and easy wiring
- DIN rail mountable

TECHNICAL DATA

Operating voltage:	AC: 120 - 240V / DC: 12 - 36VDC (other voltages also available)
Heating element:	PTC resistor, self-regulating
Heating body:	Anodized extruded aluminum
Protection class:	I, test voltage 1600 V
Protection type:	IP 20
Connection:	Push-type terminals for stranded and solid wire 3 x AWG 20-16 (0.5-1.5 mm²)
Mounting:	Clip for 35 mm DIN rail (EN 50022)

DRAWINGS

Dimensions, inches [mm], are for reference only and are subject to change.

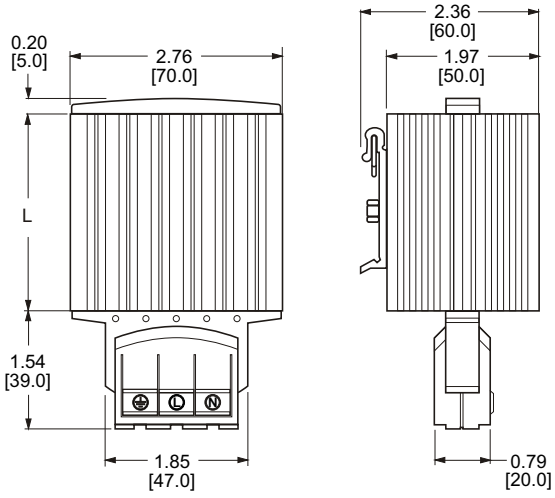

Determining the required heater size:

$$P_H = (A \times \Delta T \times k) - P_V$$

P_H = Required heating power for your application in Watts (W)

P_V = Heating power generated by existing components (e.g. a transformer) in Watts (W)

A = Exposed enclosure surface area in square meters (m²)

ΔT = Temperature differential between the desired minimum interior temperature and the lowest possible external temperature of the enclosure in Kelvin (K), 1.8ºF = 1ºC = 1K

k = Heat transmission coefficient of the enclosure material used:

Painted steel:	5.5W/m²K
Stainless steel:	3.7W/m²K
Aluminum:	12W/m²K
Polyester/Plastic:	3.5W/m²K

For outdoor applications it is recommended to double the heating power.

Applications:

Electrical & Electronic enclosures
Telecommunications systems
Display panels
Automatic teller machines (ATM’s)
Access & Parking control systems
Ticket dispensers

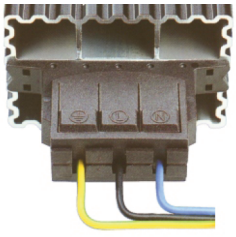

Specifications are subject to change without notice. Suitability of this product for its intended use and any associated risks must be determined by the end customer/buyer in its final application.

KFEHK PTC HEATER

STANDARD FEATURES

- Compact heater in PTC technology
  Maintains minimum operating temperatures in enclosures
  Helps to prevent failure of electronic components caused by condensation and corrosion
- Heating power adjusts to ambient temperature
- DIN rail mountable

KFEHK Heaters are UL approved when used in conjunction with a KFST Thermostat.



Model Number 110-250VAC	Power*	Rated Current**	Length (L)	Weight
KFEHK45	45W	0.20A	4.1”/105 mm	0.61 lbs (280 g)
KFEHK100	100W	0.47A	6.1”/155 mm	0.88 lbs (400 g)
KFEHK150	150W	0.77A	9.1”/230 mm	1.30 lbs (590 g)

* At 68ºF (20ºC) ambient temperature
** Inrush current

Contact Kooltronic for quantity pricing.

TECHNICAL DATA

Operating voltage:	AC/DC 100 - 250 V (other voltages also available)
Heating element:	PTC resistor, self-regulating
Heating body:	Anodized extruded aluminum
Protection class:	I, appliance
Protection type:	IP 44
Mounting:	Clip for 35 mm DIN rail (EN 50022)

Applications:
Electrical & Electronic enclosures
Telecommunications systems
Display panels
Automatic teller machines (ATM’s)
Access & Parking control systems
Ticket dispensers

Determining the required heater size:

$$P_H = (A \times \Delta T \times k) - P_V$$

P_H = Required heating power for your application in Watts (W)

P_V = Heating power generated by existing components (e.g. a transformer) in Watts (W)

A = Exposed enclosure surface area in square meters (m²)

ΔT = Temperature differential between the desired minimum interior temperature and the lowest possible external temperature of the enclosure in Kelvin (K), 1.8ºF = 1ºC = 1K

k = Heat transmission coefficient of the enclosure material used:

Painted steel:	5.5W/m²K
Stainless steel:	3.7W/m²K
Aluminum:	12W/m²K
Polyester/Plastic:	3.5W/m²K

For outdoor applications it is recommended to double the heating power.

DRAWINGS

Dimensions, inches [mm], are for reference only and are subject to change.

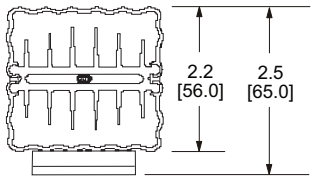

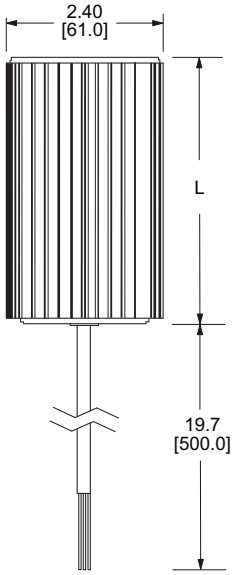

HOW TO ORDER

Specify model number.

Specifications are subject to change without notice. Suitability of this product for its intended use and any associated risks must be determined by the end customer/buyer in its final application.

SMALL PTC HEATER

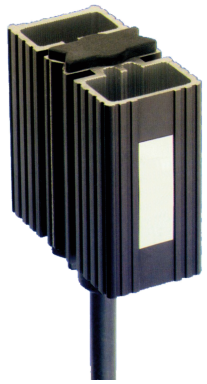

STANDARD FEATURES

- Compact heater in PTC technology
  Maintains minimum operating temperatures in enclosures
  Helps to prevent failure of electronic components caused by condensation and corrosion
- Heating power adjusts to ambient temperature
- Push connections for quick and easy wiring
- DIN rail mountable

Model No.	Voltage	Power*	Max. Amps**	Length	VDE	UL
KSEHK10	110-120 VAC	10W	1.0A	2.0” (50 mm)		✔
KSEHA21	110-120 VAC	20W	1.5A	2.8” (70 mm)		✔
KSEHK30	110-120 VAC	30W	1.5A	4.0” (100 mm)		✔
K2SEHK10	140-240 VAC	10W	1.0A	2.0” (50 mm)	✔	
K2SEHA21	140-240 VAC	20W	2.5A	2.4” (60 mm)	✔	
K2SEHK30	140-240 VAC	30W	3.0A	2.8” (70 mm)	✔	

* At 68ºF (20ºC) ambient temperature
** Inrush
Contact Kooltronic for quantity pricing.

TECHNICAL DATA

Heating element:	PTC resistor, self regulating
Heat sink:	Anodized extruded aluminum
Protection class:	I (grounded)
Protection type	IP 54
Connection:	3 x AWG 20 (0.5 mm²), 12” (300 mm) length
Mounting:	Clip for 35 mm DIN rail (EN 50022)
Weight (approx.):	4 oz. (120g)

DRAWINGS

Dimensions, inches [mm], are for reference only and are subject to change.

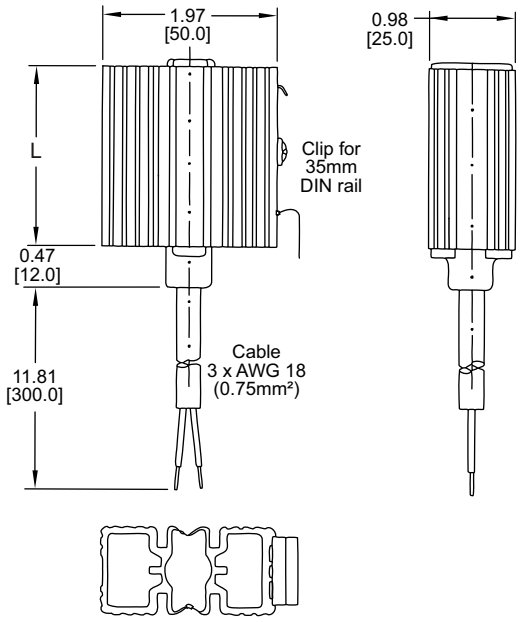

Applications:
Electrical & Electronic enclosures
Telecommunications systems
Display panels
Personnel environmental booths
Automatic teller machines (ATM’s)
Access & Parking control systems
Ticket dispensers

Determining the required heater size:

$$P_H = (A \times \Delta T \times k) - P_V$$

P_H = Required heating power for your application in Watts (W)
P_V = Heating power generated by existing components (e.g. a transformer) in Watts (W)
A = Exposed enclosure surface area in square meters (m²)
ΔT = Temperature differential between the desired minimum interior temperature and the lowest possible external temperature of the enclosure in Kelvin (K), 1.8ºF = 1ºC = 1K
k = Heat transmission coefficient of the enclosure material used:

Painted steel:	5.5W/m²K
Stainless steel:	3.7W/m²K
Aluminum:	12W/m²K
Polyester/Plastic:	3.5W/m²K

For outdoor applications it is recommended to double the heating power.

HOW TO ORDER

Specify model number.

Specifications are subject to change without notice. Suitability of this product for its intended use and any associated risks must be determined by the end customer/buyer in its final application.

ENCLOSURE ACCESSORIES: LIGHTS

DESCRIPTION

Compact Enclosure Light: The Compact Enclosure Light was designed for use in industrial enclosures and control cabinets. A strong magnet allows simple and quick installation and flexibility for various mounting positions.

Slimline Light: The Slimline Light was designed to fit into tight spaces in enclosures. It features an integrated receptacle, so that electrical devices (e.g. power tools) can be easily plugged in when needed. The standard light can be screw mounted in a variety of positions, or the light can be fitted with an optional magnet mount. The motion sensor was designed so it can be used in enclosures with glass doors and not activated by movement outside the enclosure.

LED Enclosure Light: The LED Enclosure Light is also offered with either an on/off switch, or a motion sensor. The power output allows up to 10 lights to be connected to each other (daisy chain) with both the input and output plugs snap-locking into place.



KOOLTRONIC also designs and manufactures a variety of cooling units to meet *unique* specifications. We invite your inquiries about our modification and custom-design capabilities.

CALL 1-800-321-KOOL (5665)
or FAX 609-466-1114

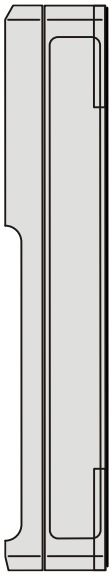

Compact
Enclosure Light
13.9"H x 2.5"W x 2.5"D

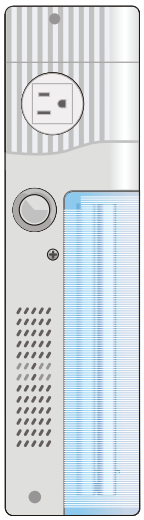

Slimline
Enclosure Light
13.5"H x 1.5"W x 3.5"D

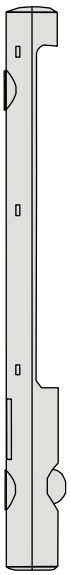

LED Enclosure Light
KSLED
15.6"H x 2.6"W x 3.9"D

ENCLOSURE LIGHTS

COMPACT ENCLOSURE LIGHT



The KSCL Compact Enclosure Light was designed for use in industrial enclosures and control cabinets. A strong magnet allows simple and quick installation and flexibility for various mounting positions.

STANDARD FEATURES

- Magnet or DIN rail mounting
- Energy-saving lamp
- Integrated receptacle
- On/Off switch

Model No.	Voltage	Power
KSCL9/R	120 VAC	9W (~60W incandescent bulb)
K2SCL11/RS	230 VAC	11W (~75W incandescent bulb)

TECHNICAL DATA

Lamp:	Compact fluorescent lamp
Luminosity:	900 Lm
Service life:	5000 hours
Radio interference suppression grade:	In compliance with VDE 0712 IEC 82
Switch:	On /off light switch
Receptacle:	AC 120V: US receptacle and protective cover AC 230V: Schuko receptacle and protective cover
Connections:	3-pole terminal for AWG 14 max. (2.5 mm²)
Mounting:	Magnet mounting on painted steel surfaces Holding power approx. 20 kp (on 2 mm sheet metal)
Housing:	Plastic
Protection class:	I (grounded)
Protection type:	IP 20
Operating/storage temperature:	-4 to 122ºF (-20 to 50ºC)

DRAWINGS

Dimensions, inches [mm], are for reference only and are subject to change.

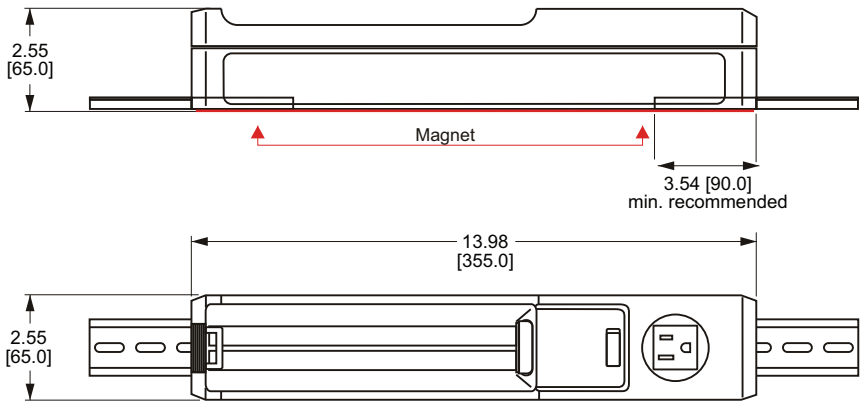

Drawing shows mounting on two 7 inch long pieces of 35mm DIN rail.

HOW TO ORDER

Specify model number.

ENCLOSURE LIGHTS

Specifications are subject to change without notice. Suitability of this product for its intended use and any associated risks must be determined by the end customer/buyer in its final application.

SLIMLINE LIGHT

The Slimline Light was designed to fit in tight spaces in enclosures. It features an integrated receptacle, so that electrical devices (e.g. power tools) can be easily plugged in when needed. The standard light can be screw-mounted in a variety of positions, or the light can be fitted with an optional magnet mount. The motion sensor was designed so it can be used in enclosures with glass doors and not be activated by movement outside the enclosure.

STANDARD FEATURES

- Compact design
- Energy-saving lamp
- Integrated receptacle
- On/Off switch or Motion Sensor

OPTIONS

- Integrated receptacle

Light with Motion Sensor



Light with On/Off Switch

TECHNICAL DATA

Light bulb:	Compact fluorescent light bulb
Power:	11W (~75W incand.), Base: 2G7, electronic ballast
Luminosity:	900 Lm
Service life:	5000 hours
Switch:	On/off switch (for light only)
Motion sensor:	PIR = Passive Infrared (see note below)
Receptacle:	max. AC 250 V / 16A (Schuko)
Connection:	3-pole screw terminal for AWG 14 max. (2.5 mm²) (includes cable strain relief)
Mounting:	M5 screws (not included), 11.8" (300 mm) hole distance or optional attached magnet (see model numbers)
Housing:	Plastic, UL94V-0
Weight (approx.):	14.1 oz. (400 g), 1.3 lbs. (600 g) with magnet
Protection type:	IP 20

DRAWINGS

Dimensions, inches [mm], are for reference only and are subject to change.

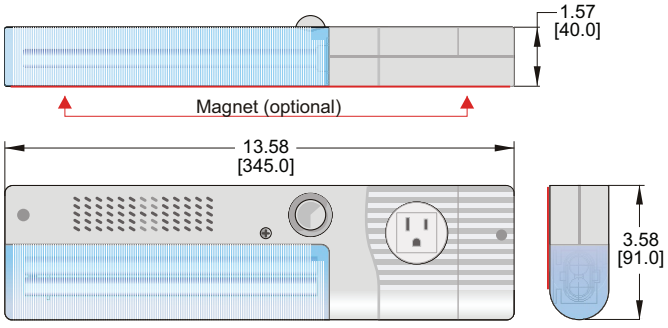

HOW TO ORDER

Specify model number.

Receptacle	Model Number With On/Off Switch	Model Number With Motion Sensor
USA/Canada (AC 120 V):	KSLS/R	KSLM/R
w/ magnet mounting:	KSLS/RM	KSLM/RM
No receptacle (AC 120 V):	KSLS	KSLM
w/ magnet mounting:	KSLS/M	KSLM/M
No receptacle (AC 230 V):	K2SLS	K2SLM
w/ magnet mounting:	K2SLS/M	K2SLM/M

A Passive Infrared (PIR) motion sensor detects the motion of the enclosure door being opened and automatically turns on the light. The sensor is factory pre-set to turn the light off 5 minutes after all motion ceases. The motion sensor does not detect movement through glass or fiberglass, thus allowing installation in enclosures with glass doors.

Specifications are subject to change without notice. Suitability of this product for its intended use and any associated risks must be determined by the end customer/buyer in its final application.

LED ENCLOSURE LIGHT

Model No.	Description	Voltage	Mounting	Switch Type*
KSLEDSM	LED Light	100-240 VAC	magnet	on/off switch
KSLEDS	LED Light	100-240 VAC	screw	on/off switch
K7SLEDSM	LED Light	24-48 VDC	magnet	on/off switch
K7SLEDS	LED Light	24-48 VDC	screw	on/off switch
KSLEDM/M	LED Light	100-240 VAC	magnet	PIR motion sensor
KSLEDM	LED Light	100-240 VAC	screw	PIR motion sensor
K7SLEDM/M	LED Light	24-48 VDC	magnet	PIR motion sensor
K7SLEDM	LED Light	24-48 VDC	screw	PIR motion sensor

*Passive Infrared (PIR) motion sensor is factory pre-set to turn the light off 6 minutes after all motion ceases.

KSLEDSM Light
with magnet mount



KSLEDS Light
with screw mount



TECHNICAL DATA

Power consumption:	max. 5 W (~75 W incandescent bulb)
Luminosity:	290 Lm
Lamp type:	LED, 120º angle of radiation light color - daylight, color temperature - 6,500 K
Service life:	60,000 hours at 68ºF (20ºC)
Connection:	2-pole plug with snap lock AC: max. 2.5 A / AC 240 V, white cable DC: max. 2.5 A / DC 60 V, blue cable
Housing:	plastic, transparent
Mounting:	magnet or M5 screw (not included), 9.8" (250mm) centers; screw torque 2 Nm max.
Operating temperature:	-22 to 140ºF (-30 to 60ºC)
Storage temperature:	-40 to 185ºF (-40 to 85ºC)
Dimensions:	magnet mount - 13.8 x 1.3 x 1.3" (351 x 34 x 32mm) screw mount - 13.8 x 1.4 x 1.3" (351 x 36 x 32mm)
Protection type:	IP 20
Protection class:	II (double insulated)
Accessories:	input and output plug, cable for supply or connection*
Approvals:	UL, VDE
Weight:	models with on/off switch - 4.8 oz. (135 g) models with motion sensor - 5.0 oz. (140 g)

* NOTE: Connectors and cables for electrical connection are not included in the delivery of KSLED Series LED lights. These parts must be ordered separately. See KSLED accessories on next page.

DRAWINGS

Dimensions, inches [mm], are for reference only and are subject to change.

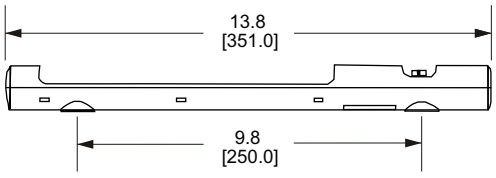

On/off switch light w/ magnet mount

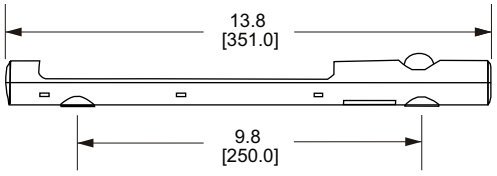

Motion sensor light w/ magnet mount

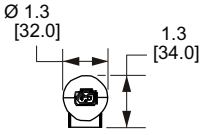

Magnet mount end view

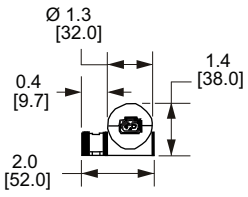

Screw mount end view

HOW TO ORDER

Specify model number.

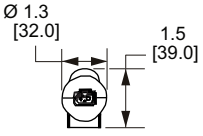

Magnet mount end view

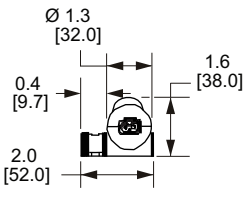

Screw mount end view

Specifications are subject to change without notice. Suitability of this product for its intended use and any associated risks must be determined by the end customer/buyer in its final application.

KLED LIGHT ACCESSORIES

Connection cable with input connector and wire leads:



NOTE: Connectors and cables for electrical connection are not included in the delivery of KSLED Series LED lights. These parts must be ordered separately.

Connection cable, Part No. KSLEDAC

Part Number	Model	Length (ft) [m]	Voltage	Color	Approvals
KSLEDAC	connection cable 2 x AWG 16 w/ input connector	(6.5) [2]	AC	connector: white - cable: white	UL, VDE
KSLEDDC	connection cable 2 x AWG 16 w/ input connector	(6.5) [2]	DC	connector: blue - cable: white	UL, VDE

Extention cable with 2 connectors for daisy chain (input & output) connection:



Connection cable, Part No. KSLEDACE

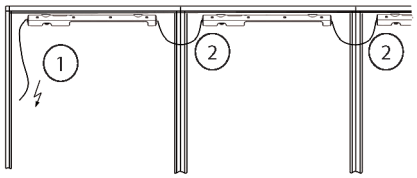

Connection example: Up to 10 lights can be daisy-chained together via quick connection plugs or extension cables.

Part Number	Model	Length (ft) [m]	Voltage	Color	Approvals
KSLEDACE	connection cable 2 x AWG 16 w/ 2 connectors	(3.2) [1]	AC	connectors: white - cable: white	UL, VDE
KSLEDDCE	connection cable 2 x AWG 16 w/ 2 connectors	(3.2) [1]	DC	connectors: blue - cable: white	UL, VDE

Input / output connectors:



Input connector
Part No. KSICAC



Output connector
Part No. KSOCAC

Part Number	Model	Voltage	Color	Approvals
KSICAC	input connector	AC	white	UL, VDE
KSOCAC	output connector	AC	white	UL, VDE
KSICDC	input connector	DC	blue	UL, VDE
KSOCDC	output connector	DC	blue	UL, VDE

HOW TO ORDER
Specify model number.

Light kit with input connector included:

Part Number magnet mount	Part Number screw mount	Operating Voltage	Switch type	Weight
KSLEDSMC	KSLEDSC	AC 100-240 V, 50/60 Hz (min. AC 90V, max. AC 265 V)	on/off switch	4.8 oz. [140g]
K7SLEDSMC	K7SLEDSC	DC 24-48 V, (min. DC 20 V, max. DC 60 V)	on/off switch	4.8 oz. [140g]
KSLEDM/MC	KSLEDMC	AC 100-240 V, 50/60 Hz (min. AC 90 V, max. AC 265 V)	PIR motion sensor*	5.0 oz. [140g]
K7SLEDM/MC	K7SLEDMC	DC 24-48 V, (min. DC 20V, max. DC 60 V)	PIR motion sensor*	5.0 oz. [140g]

*Passive Infrared (PIR) motion sensor is factory pre-set to turn the light off 6 minutes after all motion ceases.

Specifications are subject to change without notice. Suitability of this product for its intended use and any associated risks must be determined by the end customer/buyer in its final application.

ENCLOSURE ACCESSORIES: MISCELLANEOUS



DESCRIPTION

These small accessories were designed to aid in the organization of electronic cabinets and control panels.

KSDR Fix: Makes the mounting of smaller DIN rail mountable components easier.

Enclosure Receptacle: Offers quick connections, is available with or without fuse and is DIN rail mountable.

KOOLTRONIC also designs and manufactures a variety of cooling units to meet *unique* specifications. We invite your inquiries about our modification and custom-design capabilities.

CALL 1-800-321-KOOL (5665)
or FAX 609-466-1114

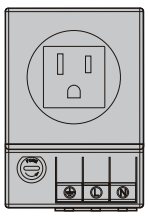

KSDR
Enclosure Receptacle
3.6"H x 2.4"W x 1.8"D

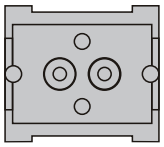

KSDR/FIX
Mounting Aid
13.5"H x 1.5"W x 3.5"D

ENCLOSURE RECEPTACLE

STANDARD FEATURES

- Quick connections
- Available with or without fuse
- DIN rail mountable



Model No.	Voltage	Fuse
KSDR/RF	120 VAC	6.3A / 250 VAC max.
KSDR/R	120 VAC	None

TECHNICAL DATA

Maximum ratings:	With fuse: 6.3 A at AC 250 V Without fuse: 15 A at AC 125 V
Fuse size:	Ø 5 x 20 mm, rated 6.3 A
Service life:	5000 hours
Connection:	3 x AWG 20-16 (0.5-1.5 mm²) push type terminals for stranded or rigid wire
Mounting:	Clip for 35 mm DIN rail
Dimensions:	3.6 x 2.4 x 1.9” (92 x 62 x 48 mm)
Housing:	Plastic, UL94V-0
Protection class:	IP 20
Protection type:	I (grounded)
Operating/storage temperature:	-49 to 158ºF (-45 to 70ºC)

DRAWINGS

Dimensions, inches [mm], are for reference only and are subject to change.

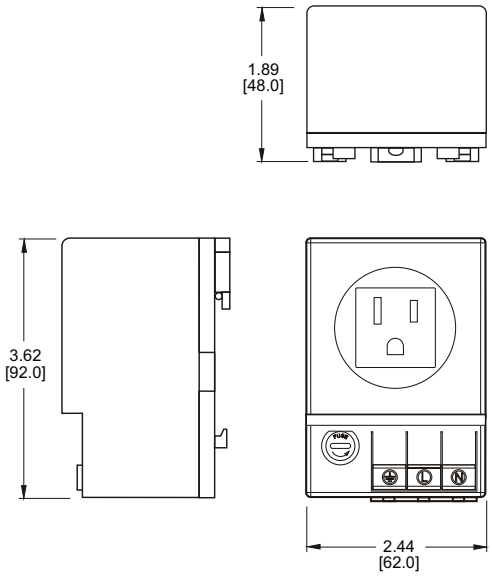

HOW TO ORDER

Specify model number.

MISCELLANEOUS

Specifications are subject to change without notice. Suitability of this product for its intended use and any associated risks must be determined by the end customer/buyer in its final application.

SELF-ADHESIVE MOUNTING AID

The KSDR/FIX is a small aid specially designed to make mounting of smaller DIN rail mountable components easier. It can be used whenever the installation of a DIN rail is impractical, or when there is not enough space left in an enclosure.

Because of its industrial grade self-adhesive it can be installed much easier and quicker than a conventional DIN rail, without the effort of hole drilling and screw mounting. This is especially practical for subsequent changes or additions in an already equipped enclosure.

The KSDR/FIX can hold components up to 1.1 lbs in weight. Some of the many applications include the mounting of timing relays, series terminals, thermostats, cable channels and even small heaters. In addition, DIN rails can be mounted simply by using several KSDR/FIX units.

If the weight of attached components exceeds the load limit, or if a more secure mounting is desired, (e.g. on rough surfaces), it can also be screw-mounted. All that is necessary to install KSDR/FIX is a smooth and clean surface. The initial adhesive power is 40%, and after 24 hours, it has its full holding power of 1.1 lbs.

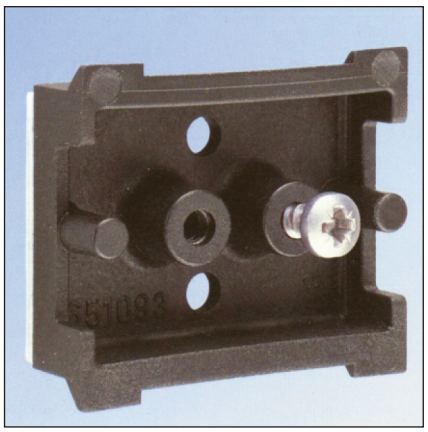



Application example

TECHNICAL DATA

Model Number:	KSDR/FIX
Application:	Direct attachment of small components and 35 mm DIN rails (EN 50022)
Capacity:	7 oz (200 g) initially 1.1 lb (500 g) after 24 hour waiting period
Mounting surface:	All smooth surfaces, e.g. metals, lacquered surfaces, plastics other than polyethylene, polypropylene and rubber. Mounting surface must be dry and free from dust, oil, separating agents and other contamination.
Dimensions:	1.7 x 1.5 x 0.55” (43 x 38 x 14 mm)
Hole pattern:	0.5” distance, Ø 0.14” (12.8 mm; Ø 3.6 mm)
Material:	polyamide (rated UL94V-0) with non-deteriorating high-performance adhesive
Temperature range:	-49 to 158ºF (-45 to 70ºC)
Included:	mounting screw for perforated DIN rail

RoHS COMPLIANT

HOW TO ORDER

Specify model number.

DRAWINGS

Dimensions, inches [mm], are for reference only and are subject to change.

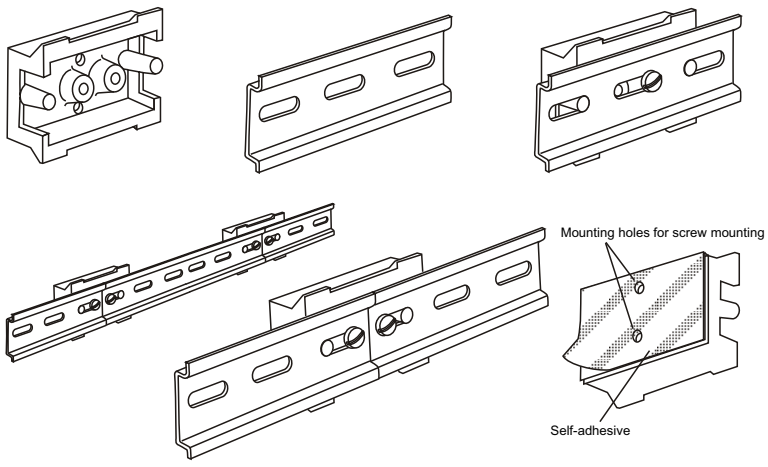

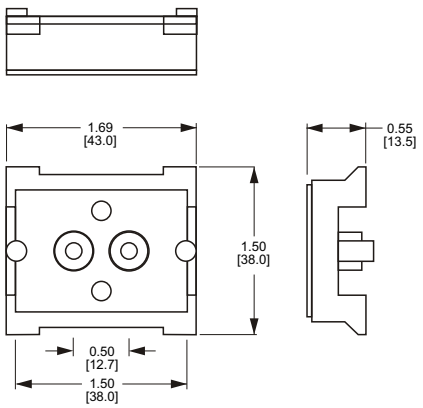

MISCELLANEOUS

Specifications are subject to change without notice. Suitability of this product for its intended use and any associated risks must be determined by the end customer/buyer in its final application.

ENCLOSURE ACCESSORIES: OUTDOOR FILTER FAN AND EXHAUST PACKAGE

DESCRIPTION

These indoor/outdoor Filter Fan and Exhaust Packages are used in enclosures to dissipate heat harmful to sensitive electronic components. These fans feature a filter that is easily changed by opening the lockable door of the outdoor hood. IP55 protection is reached by the specially-designed hood and the use of special filters. The plastic casing is impact-resistant, weatherproof and UV resistant.

KOOLTRONIC also designs and manufactures a variety of cooling units to meet *unique* specifications. We invite your inquiries about our modification and custom-design capabilities.

CALL 1-800-321-KOOL (5665)
or FAX 609-466-1114



RoHS COMPLIANT

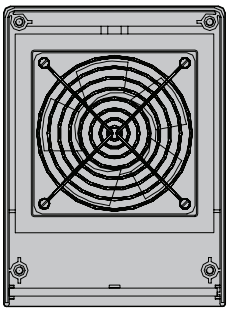

KSFF Outdoor Filter Fan
and Exhaust Package
8.8"H x 6.5"W x 1.6"D

OUTDOOR FILTER FAN AND EXHAUST PACKAGE





These indoor/outdoor Filter Fan and Exhaust Packages are used in enclosures to dissipate heat harmful to sensitive electronic components. The fans feature a filter that is easily changed by opening the lockable door of the outdoor hood. IP55 protection is reached by the specially-designed hood and the use of special filters. The plastic casing is impact-resistant, weather-proof and UV resistant.

Model No.	Filter Fan	Exhaust Filter	Voltage	Hz	Current Consumption	Power Consumption	EMC Version
KSFF	✔		120 VAC	60	180mA	15W	
K2SFF	✔		230 VAC	50	100mA	15W	
KS7FF	✔		24 VDC		0.21A	5.04W	
KS8FF	✔		48 VDC		0.16A	7.68W	
KSFF/E	✔		120 VAC	60	180mA	15W	✔
K2SFF/E	✔		230 VAC	50	100mA	15W	✔
KSEF		✔					
KSEF/E		✔					✔

TECHNICAL DATA

FILTER FANS

Filter mat: Fine Grade	360g/m², filtering degree 98% particle Ø > 10 µm, F5 (EN779)
Airflow - free blowing:	11.8 cfm (20 m³/h)

Note: Airflow increases by approximately 15% for 120 V/60 Hz models

Average noise level at 3 ft. (DIN EN ISO 9614-2):	40 dB (A)
Mounting depth:	2.4 in (62.0mm)
Enclosure cut-out:	4.9 x 4.9 in (125 x 125mm + 0.4)
Approx. weight:	2.6 lbs (1.2kg)
Protection type:	IP 55
Axial fan:	Ball bearing, aluminum frame, plastic impeller - UL 94V-0
Filter fan housing:	Plastic ASA, UL 94HB, light grey, temperature resistant -31 to 194°F.
Mounting frame:	Double-sided industrial adhesive tape for affixing to the outside of enclosures

EXHAUST FILTER

Filter Mat: Fine grade	360 g/m², filtering degree 98% particle Ø > 10 µm, F5 (EN779)
Mounting depth:	2.4 in (62.0mm)
Enclosure cut-out:	4.9 x 4.9 in (125 x 125mm + 0.4)
Approx. weight:	2.1 lbs (0.95kg)
Protection type:	IP 55

Replacement filter:
Filter Mat (F5) 122 x 122mm Fine Grade:
Part Number: **KS481F** (package of 3)

HOW TO ORDER

Specify model number.

DRAWINGS

Dimensions, inches [mm], are for reference only and are subject to change.

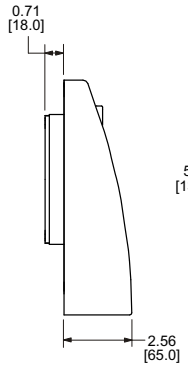

Exhaust Filter

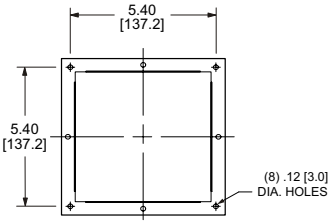

Mounting Frame

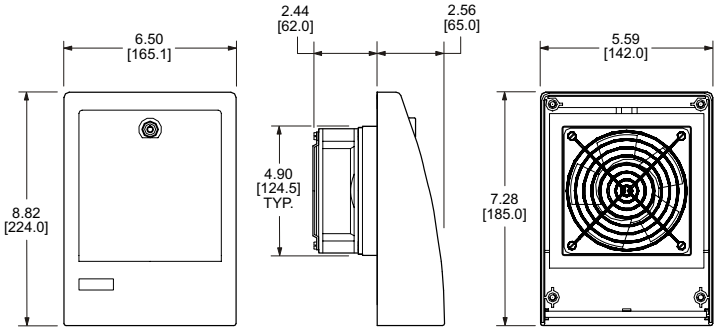

Filter Fan

Specifications are subject to change without notice. Suitability of this product for its intended use and any associated risks must be determined by the end customer/buyer in its final application.

APPLICATIONS


Hazardous Location

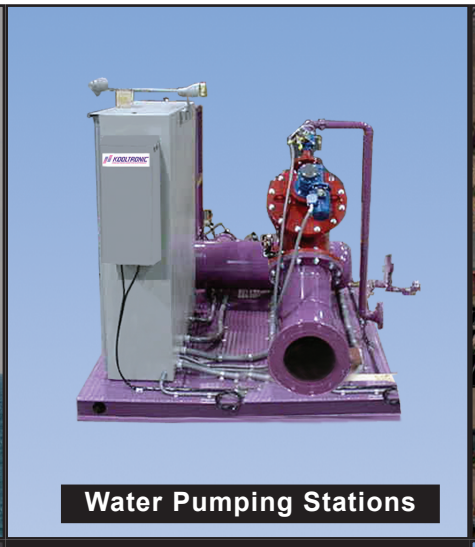
Water Pumping Stations


Wastewater Treatment


Industrial

As the industry leader in electronics enclosure cooling, KOOLTRONIC offers products covering a wide range of applications.


Food & Beverage


Medical

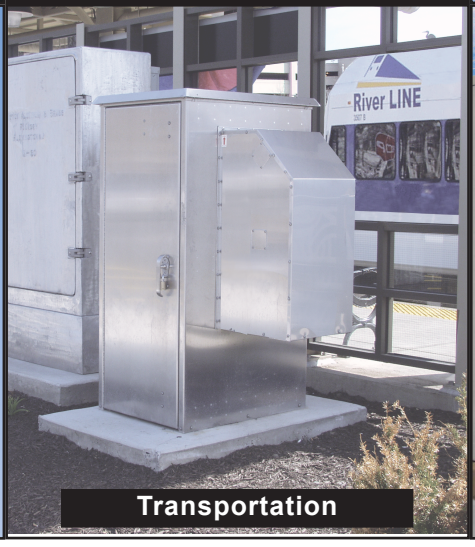

Transportation


Telecommunications

APPLICATIONS

KOOLTRONIC STANDARD WARRANTY

KOOLTRONIC products are warranted to be free of defects in workmanship, materials and components. The following warranty periods apply from date of shipment:

- Air moving devices/components and hermetic system components: One year
- Non-operating parts, except filters: 5 years

The above warranty applies when the equipment is operated under the following conditions:

- Ambient temperature not in excess of 125ºF (52ºC) in normal atmosphere or as stated on product nameplate
- Voltage variation no greater than ±10% from nameplate rating
- Frequency variation no greater than ±3Hz from nameplate rating
- Maximum cooling load no higher than air conditioner nameplate rating
- Waiting five minutes before restarting air conditioner after intentional or accidental shutoff
- Compliance to all other installation, maintenance and operating instructions, as supplied
- The purchaser assumes the responsibility of grounding the unit and installing it in accordance with local electrical and safety codes, as well as the National Electric Code (NEC) and OSHA

KOOLTRONIC cannot assume responsibility for misapplication of its products or the erroneous selection of an inappropriate product by a non-authorized KOOLTRONIC representative. Our applications engineers will gladly assist in the selection of the proper product, provided all required details of the application are furnished.

KOOLTRONIC assumes no liability beyond the repair or replacement of its own product. This Warranty does not cover:

- Labor or reimbursement of labor for evaluation, removal, installation, repair or cost of any warranted part, except at the KOOLTRONIC factory in Pennington, NJ
- Use of equipment for other than its designed purpose or operating conditions
- Operation in harsh, oily, corrosive or other abnormal environmental conditions, without the proper filtration, sealing, protective coatings and/or weather protection
- Damage to hermetic system resulting from continuous operation with dirty or clogged air filters or improper or negligent maintenance
- Use of refrigerant other than designated
- Customer modification or abuse
- Shipping damage or other accident (Claims for shipping damage are the responsibility of the customer. Timely claims must be filed by the customer with the freight carrier)
- Cracked or broken hermetic tubing, brazed joints or other internal damage caused by shipping or mishandling
- Damage caused by shipping units attached to an enclosure
- Any and all conditions resulting from noncompliance with the preceding operating conditions
- Returned freight must be paid by customer
- **This standard warranty does not apply to custom products. Consult your KOOLTRONIC representative for limitations**

THIS WARRANTY CONSTITUTES THE ENTIRE WARRANTY WITH RESPECT TO THE PRODUCT AND IS IN LIEU OF ALL OTHERS, EXPRESSED OR IMPLIED, INCLUDING ANY WARRANTY OF MERCHANTABILITY AND WARRANTY OF FITNESS FOR A PARTICULAR PURPOSE AND IN NO EVENT IS KOOLTRONIC RESPONSIBLE FOR ANY CONSEQUENTIAL DAMAGES OF ANY NATURE WHATSOEVER.

RETURN AUTHORIZATION (RA) PROCEDURE

- All returns require a Return Authorization number whether the return is for warranty or non-warranty repair, rotation of stock, damage or any other reason. Returns without an RA number will be refused.
- Customer must call the KOOLTRONIC Customer Service Department, Pennington, New Jersey (609•466•3400) to obtain an RA number.
- The following information is required when an RA is requested:
  - Original customer Purchase Order number and date
  - Date product was received by customer
  - Number of parts to be returned
  - Product description, model and serial number
  - Reason for return
  - Action requested
  - Contact name, telephone, FAX numbers and e-mail address
- Pack unit in a suitable container for shipment, preferably the original packaging if available. All Air Conditioners must be returned in an upright position properly secured to a pallet. **Improper packaging may void warranty claim.** If an Air Conditioner is received laying down or shipped via UPS or similar service the warranty will be void.
- Mark box prominently with KOOLTRONIC's Return Authorization Number.
- Enclose all pertinent documents.
- Freight charges on all products returned to KOOLTRONIC shall be paid by the customer. Unauthorized collect shipments will be refused.
- If a unit is repaired under Warranty, KOOLTRONIC will pay the freight charges both ways. Warranty repaired units will be returned to customer at KOOLTRONIC expense only within the Continental USA.
- All authorized returns are subject to a restocking fee.

GENERAL TERMS AND CONDITIONS OF SALE

HOW TO ORDER

Please order by model number as described in the applicable product sections.

Telephone orders will be accepted and processed immediately. However, manufacturing and shipment may be deferred until a written confirming order is received, either by a standard purchase order or other acceptable form. All orders **MUST** include:

- Purchase order number
- Shipping and billing address
- KOOLTRONIC model number, full description, electrical specifications, quantity and unit price
- Delivery date desired, subject to acknowledgement
- Name of authorized purchasing department representative
- Method of shipment desired
- Amount of insurance on shipment, if required
- Sales/use tax status of order and exemption number, if exempt

MINIMUM ORDERS

All orders are subject to acceptance, dependent on quantity, availability of parts and other factors.

PAYMENT AND CREDIT

Payment terms are Net 30 Days after shipment, subject to prior credit approval. Major credit cards are accepted. New accounts must provide necessary credit references. Until credit is established, payment in full may be required with order. All prices are FOB point of origin and include packing to good commercial practice. Sales outside the USA may be subject to Letter of Credit or other acceptable payment arrangements.

SOURCE INSPECTION CHARGE

A surcharge may apply on orders requiring inspection at the factory.

SHIPMENT

The acknowledged shipment date is based on our anticipated production schedule on the date the order is accepted. It is subject to our timely receipt of all information necessary to complete the order. We assume no liability for delays caused by circumstances beyond our control.

24-hour emergency shipment service is available.

CANCELLATION OR DEFERRED DELIVERY

Orders may be cancelled only upon the written approval of KOOLTRONIC. Cancellation may be subject to payment of reasonable charges to cover the cost of materials, labor and all direct and indirect expenses incurred by us in connection with the order.

Deferred or rescheduled delivery may, at our option, cause price adjustment and/or other appropriate charges.

REPAIR SERVICE

Units to be repaired must be returned to us freight prepaid after receipt of a KOOLTRONIC Return Authorization. Customer must contact the Customer Service Department for Return Authorization procedure and number prior to returning units (see previous page).

If warranty repair is applicable, the unit will be repaired and returned freight-prepaid, FOB destination. If warranty repair is not applicable, the customer will be advised of the repair charges. Authorization to proceed will be required before any costs are incurred. Non-warranty repairs will be returned FOB Pennington, NJ. Collect shipments or unauthorized returns may be refused by our Receiving Department.

SPECIFICATIONS, TERMS AND PRICE CHANGES; LIABILITY

KOOLTRONIC reserves the right to discontinue any item, and to make changes in the specifications, terms and conditions or prices at any time without notice. KOOLTRONIC assumes no liability for the consequences of erroneous selection or misapplication of any of its products by a non-authorized Kooltronic representative. Application and selection assistance are available by simply calling the KOOLTRONIC Sales Department.

Information furnished in this catalog is believed to be accurate and reliable at the time of printing. However, KOOLTRONIC assumes no responsibility or liability for its use, nor for the effect of future design or specification changes, nor for any infringements of patents or other rights of third parties which may result from its use. No license is granted by implication or otherwise under any patent or patent rights of KOOLTRONIC.

©2021 Kooltronic, Inc. Printed in USA

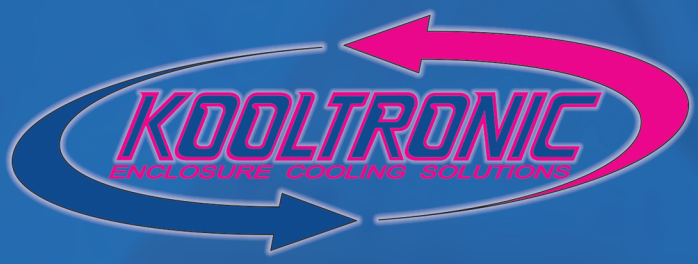

K500 (10/21)
(CDR: 20369)