THIS DOCUMENT IS THE PROPERTY OF KOOLTRONIC, INC. AND CONTAINS PROPRIETARY AND CONFIDENTIAL INFORMATION WHICH MUST NOT BE DUPLICATED, USED OR DISCLOSED OTHER THAN AS EXPRESSLY AUTHORIZED BY KOOLTRONIC, INC.

J	EC 08/016	WIRE TERMINATION WAS –04	1/23/08	DW–
K	EC 08/229	ADDED 26" BLK –04 TO WIRES #9 & #13	3/25/08	RDM
L	EC 08/383	PICTORIALLY ADDED START ASSIST 0382–11	6/27/08	RDM
M	EC 13/193	ADDED GROUND WIRE TO COMPRESSOR	5/31/13	MEM/
D	EC 07/297	CHANGED WIRE TERMINATION FROM –223 TO SOLDER ON #34 ADDED WIRE DESCRIPTION ON #31	6/28/07	JS
E	ER 07/082	ADDED "B" OPTION TO DRAWING	9/10/07	JS
F	EC 07/887	CHANGED COLOR OF #13 WIRE TO BLACK, WAS WHITE	11/2/07	JS
G	EC 07/1027	CHANGED WIRE TERMINATION FROM SOLDER TO –223 ON #34 REMOVED WIRE DESCRIPTION ON #31	12/13/07	JS
H	EC 07/1042	CHANGED TERMINAL –94 WAS –04	12/27/07	SDS

REVISIONS

SYM	NOTICE	DESCRIPTION	DATE	APPROVED
–	ER 05/168	NEW DRAWING RELEASE	1/4/06	JS
A	EC 06/303	ADDED –95 TERMINAL TO (3) WIRES	9/21/06	RDM
B	EC 07/057	CHANGED WIRE LENGTH FROM 24" TO 26"	2/15/07	JS
C	EC 07/278	CHANGED WIRE TERMINATION FROM SOLDER TO –223 ON #34 REMOVED WIRE DESCRIPTION ON #31	6/14/07	JS

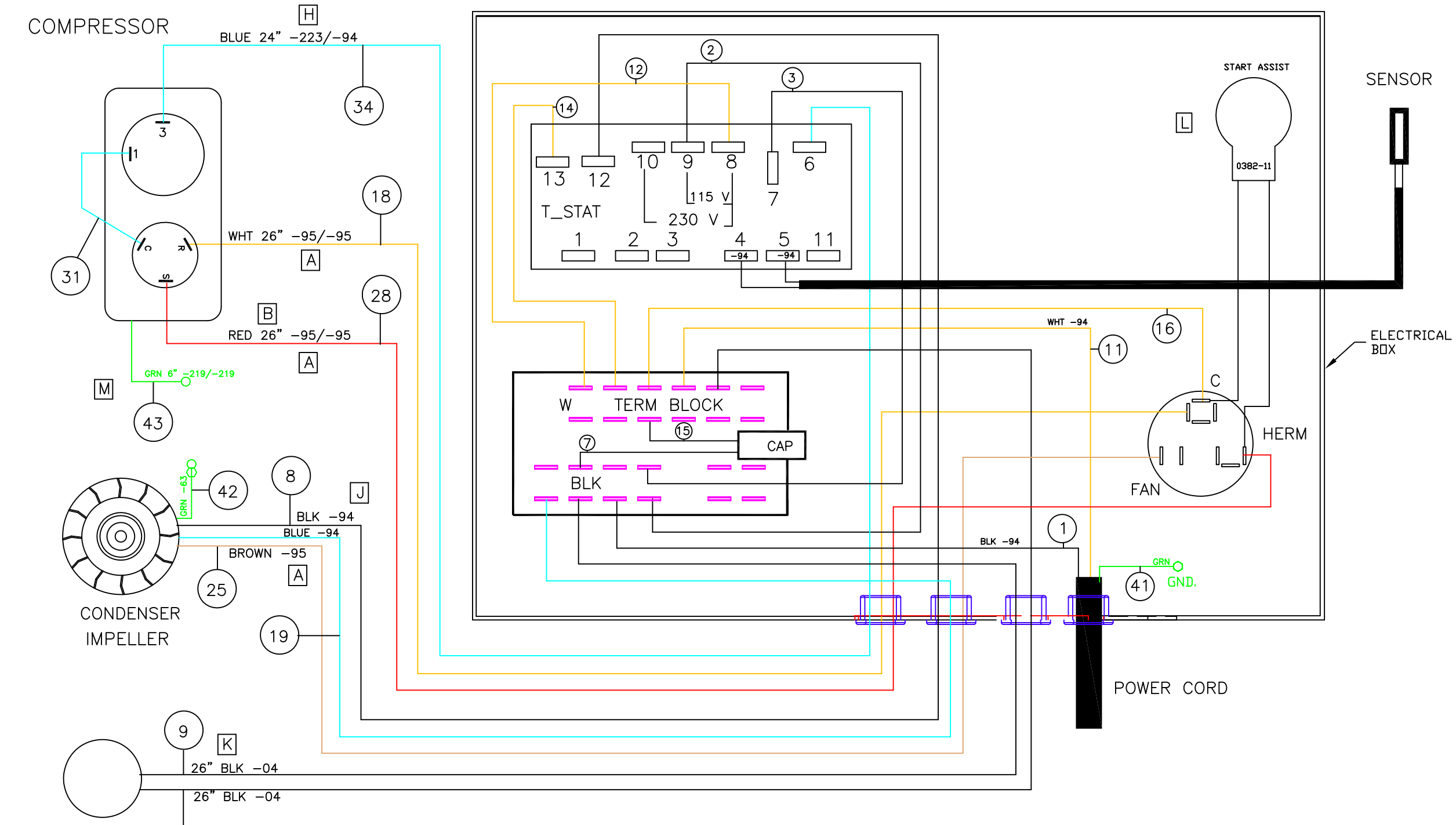

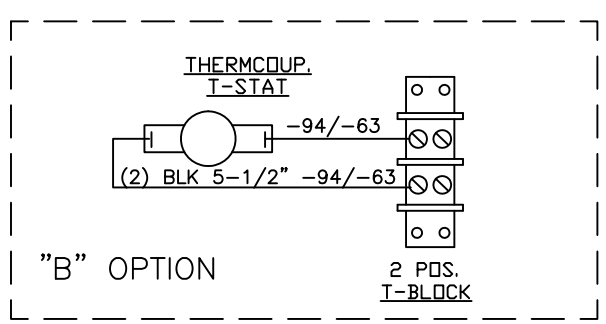

ALL DIMENSIONS ARE IN INCHES, DIMENSIONS DESIGNATED MM ARE IN MILLIMETERS.

UNLESS OTHERWISE SPECIFIED TOLERANCES NON–ACCUMULATIVE		
TOL. ON	INCHES	MM
.XX	± .02	±
.XXX	± .010	±
ANGULAR		± 1/2°
MATERIAL		
UNIT KA4C3DP21L&LB		

DRAWN	JERRY STEDNICK	11/29/05
CHECKED	MEM	1/12/06
ENG.	BORIS MUZIKANT	11/29/05
MFG. ENG.		
APPROVED	B KREELEY	1/23/06

KOOLTRONIC, INC.
HOPEWELL, NJ VENTURA, CA USA

TITLE
WIRING DIAGRAM
TWO STAGE THERMOSTAT

CODE IDENT. NO.	SIZE	DWG. NO.	REV
06223	C	WD–1125	M
SCALE NONE	CAD. REF. WD–1125	SHEET 1	OF 1