THIS DOCUMENT IS THE PROPERTY OF KOOLTRONIC, INC. AND CONTAINS PROPRIETARY AND CONFIDENTIAL INFORMATION WHICH MUST NOT BE DUPLICATED, USED OR DISCLOSED OTHER THAN AS EXPRESSLY AUTHORIZED BY KOOLTRONIC, INC.

REVISIONS

SYM	NOTICE	DESCRIPTION	DATE	APPROVED
—	EC 15/018	NEW DRAWING RELEASE	6/14/16	MEM/
A	EC 16/508	GND WIRE FROM E-BOX TO J-BOX WAS 20".	6/31/16	DW-

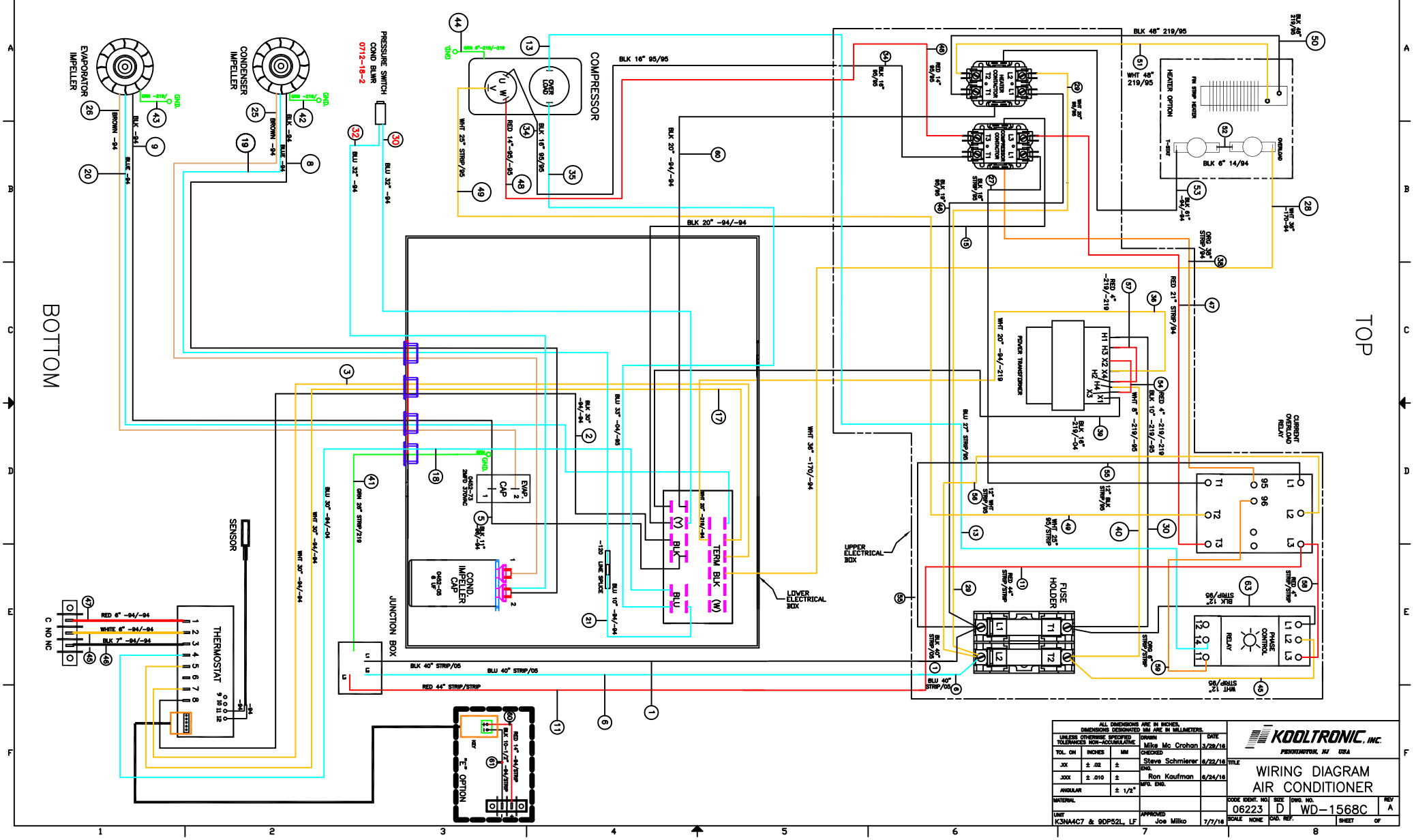

ALL DIMENSIONS ARE IN INCHES, DIMENSIONS DESIGNATED MM ARE IN MILLIMETERS.

UNLESS OTHERWISE SPECIFIED TOLERANCES NON-ACCUMULATIVE

TOL. ON	INCHES	MM
.XX	± .02	±
.XXX	± .010	±
ANGULAR		± 1/2°

MATERIAL

UNIT K3NA4C7 & 9DP52L, LF

		DATE
DRAWN	Mike Mc Crohan	3/29/16
CHECKED	Steve Schmierer	6/22/16
ENG.	Ron Kaufman	6/24/16
MFG. ENG.		
APPROVED	Joe Milko	7/7/16

KOOLTRONIC, INC.
PENNINGTON, NJ USA

TITLE
WIRING DIAGRAM
AIR CONDITIONER

CODE IDENT. NO.	SIZE	DWG. NO.	REV
06223	D	WD-1568C	A

SCALE NONE | CAD. REF. | SHEET OF